INDEX OF SHEETS

SHEET NO.	DESCRPTION
1	TITLE PAGE
2	STANDARD SHEETS
3	BEAM GUARD RAIL
4	TYPICAL SECTION OF IMPROVEMENT
5-6	ROADWAY PLANS
7-12	ROADWAY CROSS SECTIONS
13-30	BRIDGE PLANS

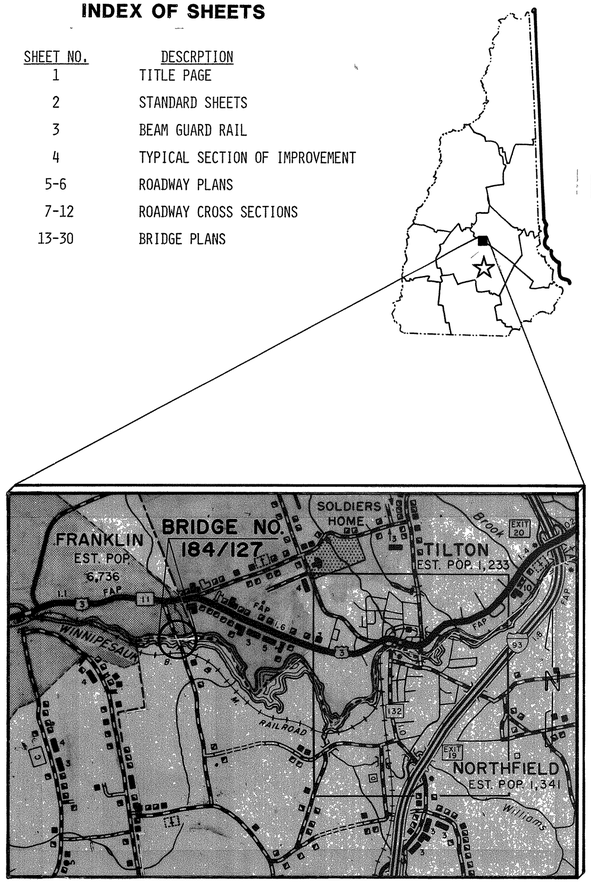

LOCATION MAP

.5 .25 0 .5

SCALE: 1 INCH = 1/2 MILE

STATE OF NEW HAMPSHIRE
DEPARTMENT OF TRANSPORTATION

PLANS OF PROPOSED
FEDERAL AID BRIDGE REPLACEMENT OFF-SYSTEM PROJECT

BRZ-163(1)

N.H. PROJECT NO. T-4198

CROSS MILL ROAD OVER THE WINNIPESAUKEE RIVER

THIS PROJECT TO BE CONSTRUCTED IN ACCORDANCE WITH STANDARD SPECIFICATIONS DATED 1983

TOWNS OF FRANKLIN-NORTHFIELD

COUNTY OF MERRIMACK

DESIGN DATA

AVERAGE DAILY TRAFFIC 1983	100	
AVERAGE DAILY TRAFFIC 2003	200	
PERCENT OF TRUCKS		%
DESIGN SPEED	30	MPH
LENGTH OF PROJECT	0.15	MILES

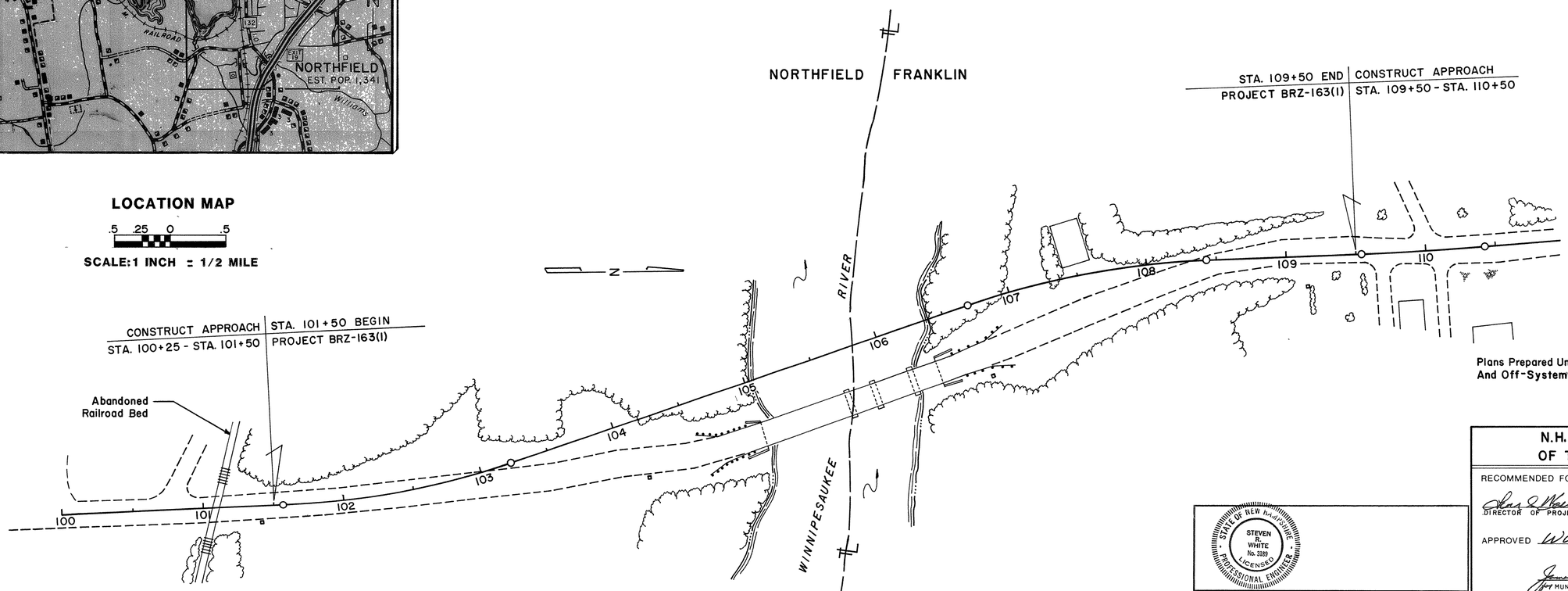

LAYOUT

1 INCH = 40 FEET

Plans Prepared Under The Secondary And Off-System Road Plan.

STATE OF NEW HAMPSHIRE
STEVEN R. WHITE
No. 3189
LICENSED
PROFESSIONAL ENGINEER

3	
2	
1	
Revisions	

ANDREWS & CLARK, INC.

N.H. DEPARTMENT OF TRANSPORTATION

RECOMMENDED FOR APPROVAL

DIRECTOR OF PROJECT DEVELOPMENT — DATE 9-14-87

APPROVED COMMISSIONER — 9/14/87

MUNICIPAL HIGHWAYS ENGINEER

U.S. DEPARTMENT OF TRANSPORTATION FEDERAL HIGHWAY ADMINISTRATION

APPROVED DIVISION ADMINISTRATOR — DATE

FEDERAL PROJECT NO.	STATE PROJECT NO.	SHEET NO	TOTAL SHEETS
BRZ-163(1)	T-4198	1	30

DRAWN BY — DATE
CHECKED BY — DATE

AS BUILT PLANS

BRUNING 44-141 56157

5-5-3-3

BRUNING 58839

STANDARD SHEETS

STANDARD	NO. 1	CONCRETE AND M.R.M. HEADWALLS	REVISED	MARCH 24, 1977
STANDARD	NO. 1-A	CONCRETE AND M.R.M. HEADWALLS	REVISED	MAY 8, 1970
STANDARD	NO. 2	STEEL ARCH PIPES, SLOPE PAVING, UNDERDRAIN HEADWALL	REVISED	MARCH 1, 1983
STANDARD	NO. 2-A	CORRUGATED ALUMINUM PIPE, PIPE ARCH, UNDERDRAIN FLUSHING BASIN	REVISED	DECEMBER 20, 1982
STANDARD	NO. 3	CATCH BASINS, DROP INLETS.	REVISED	OCTOBER 17, 1983
STANDARD	NO. 3-A	GRATES FOR C.B.'S & D.I.'S,	REVISED	OCTOBER 17, 1983
STANDARD	NO. 3-B	CATCH BASINS, DROP INLETS, TRAP	REVISED	OCTOBER 17, 1983
STANDARD	NO. 4	CURBING	REVISED	APRIL 21, 1982
STANDARD	NO. 5	CONCRETE BOUND, STEPS	REVISED	NOVEMBER 1, 1984
STANDARD	NO. 5-A	GUTTERS, SLUICE, SLOPES, MUCK EXCAVATION	REVISED	FEBRUARY 26, 1975
STANDARD	NO. 6	BEAM GUARD RAIL	REVISED	JUNE 11, 1981
STANDARD	NO. 6-A	BEAM GUARD RAIL	REVISED	DECEMBER 10, 1981
STANDARD	NO. 7	BEAM GUARD RAIL	REVISED	MAY 15, 1985
STANDARD	NO. 8	3 CABLE GUARD RAIL	REVISED	MARCH 24, 1977
STANDARD	NO. 8-A	3 CABLE GUARD RAIL	REVISED	DECEMBER 10, 1981
STANDARD	NO. 9	WOVEN WIRE & CHAIN LINK FENCE	REVISED	AUGUST 2, 1977
STANDARD	NO. 9-A	STEEL WITNESS MARKER, STEEL SIGN POST, DELINEATOR POST	REVISED	MAY 15, 1985
STANDARD	NO. 10	SIGNAL BASE, PULL BOX, CONDUIT DETAILS, HANDHOLE, FOUND. FOR CONT. CABINET	REVISED	MAY 15, 1985
STANDARD	NO. 10-A	LENS FOR TURNING MOVEMENTS, LIGHT POLE BASE, DETECTORS, PULL BOX	REVISED	NOVEMBER 1, 1984
STANDARD	NO. 11	END SECTIONS FOR PIPES	REVISED	MAY 21, 1975
STANDARD	NO. 12	DELINEATORS FOR: GUARD RAIL, MEDIAN BARRIERS	REVISED	MAY 15, 1985
STANDARD	NO. 12-A	DELINEATOR SPACING FOR RAMPS AND LOOPS	REVISED	MAY 15, 1985
STANDARD	NO. 13	URBAN MARKING AND SIGN POSTING.	REVISED	MARCH 1, 1983
STANDARD	NO. 14	RUBBISH CONTAINER, FIREPLACE, TABLE, SHELTER	REVISED	AUGUST 1, 1969
STANDARD	NO. 15	FIREPLACE, DRINKING FOUNTAIN, WATER PIPE DRAINS, PICNIC SITES	REVISED	MARCH 24, 1977
STANDARD	NO. 16	SIDEWALK RAMPS, CONCRETE ISLAND BLOCKOUTS	REVISED	MAY 15, 1985

CONSTRUCTION SIGN STANDARD SHEETS

CS	NO. 1	GENERAL NOTES	REVISED	MAY 15, 1985
CS	NO. 2	BARRICADES, REMOVAL OF PAVEMENT MARKING, CONES, DRUMS	REVISED	MAY 15, 1985
CS	NO. 3	PANELS & DELINEATORS, LIGHTING DEVICES, SIGN PADDLE, HAZARD MARKER	REVISED	MAY 15, 1985
CS	NO. 4	TRAFFIC CONTROL PROCEDURES, HAUL ROADS, BLASTING ZONES	REVISED	MAY 15, 1985
CS	NO. 5	TYPICAL LAYOUT - PERMANENT CONSTRUCTION SIGNING	REVISED	MAY 15, 1985
CS	NO. 6	SIGNS	REVISED	MARCH 1, 1983
CS	NO. 7	SIGNS	REVISED	MARCH 1, 1983
CS	NO. 8	SIGNS	REVISED	MAY 15, 1985
CS	NO. 9	TWO-WAY TRAFFIC LANE CLOSURE AND SHOULDER WORK	REVISED	MAY 15, 1985
CS	NO. 10	2 LANE DIVIDED, 2 LANE CLOSURE - BREAKDOWN LANE	REVISED	MAY 15, 1985
CS	NO. 11	DETOUR FOR 2 LANE CLOSURE, 2 LANE DIVIDED - BRIDGEWORK	REVISED	MAY 15, 1985
CS	NO. 12	4-LANE DIVIDED - 2 LANE CLOSURE UTILIZING CROSSOVER	REVISED	MAY 15, 1985
CS	NO. 13	MULTI-LANE CLOSURE	REVISED	MAY 15, 1985

THE FOLLOWING STANDARD SHEETS WILL BE USED ON THIS PROJECT:									
NO. 3	NO. 3A	NO. 4	NO. 9	NO. 11	NO. 12				

THE FOLLOWING CONSTRUCTION SIGN STANDARD SHEETS WILL BE USED ON THIS PROJECT:				
CS-1	CS-2	CS-3	CS-4	CS-5
CS-6	CS-7	CS-8	CS-9	

ITEM DESCRIPTION	NUMBER REQUIRED
BARRICADES:	
TYPE II	10
TYPE III	6
WARNING LIGHTS:	
TYPE C (STEADY BURN)	10
TRAFFIC CONES:	
28" ORANGE	20
SIGN PADDLES:	2
BARRELS: PLASTIC	20

CONSTRUCTION SIGNING REQUIREMENTS

SIGN NO.	DESCRIPTION	SIZE	S.F.	NO. REQ.	TOTAL AREA	POSTS	EASELS
G20-2	END CONSTRUCTION	2x5	10	2	20	4	
R11-2	ROAD CLOSED	2.5x4	10	2	20		
R200-S	UNAUTHORIZED TRAVEL PROHIBITED	2x4	8	2	16		
W1-6	ONE WAY ARROW --->	2x4	8	2	16		
W1-8	CHEVRON	2x2.5	5	10	50	10	
W20-1A	BRIDGE CONSTRUCTION AHEAD	4x4	16	2	32	4	
W20-1D	BRIDGE CONSTRUCTION 1500 FT.	4x4	16	2	32	4	
W20-1E	BRIDGE CONSTRUCTION 1/2 MI.	4x4	16	2	32	4	
W20-1F	BRIDGE CONSTRUCTION 1 MILE	4x4	16	1	16	2	
W20-7A	FLAGGER AHEAD	4x4	16	2	32		2
W20-9	BE PREPARED TO STOP	4x4	16	2	32		2

STATE OF NEW HAMPSHIRE

DEPARTMENT OF PUBLIC WORKS AND HIGHWAYS • HIGHWAY DESIGN DIVISION

STANDARD SHEETS

FEDERAL PROJECT NO.	STATE PROJECT NO.	SHEET NO.	TOTAL SHEETS
BRZ-163(1)	T-4198	2	30

REVISIONS AFTER PROPOSAL

NUMBER	DATE	STATION	STATION	DESCRIPTION

NOTEBOOKS

BOOK PAGE
BOOK PAGE
BOOK PAGE

EXISTING DETAIL DATE
PROPOSED DESIGN DATE
SHEET CHECKED DATE
AS BUILT DETAILS DATE

FED. ROAD DIV. NO.	STATE	PROJ.	FISCAL YEAR	SHEET NO.	TOTAL SHEETS
1	N.H.				

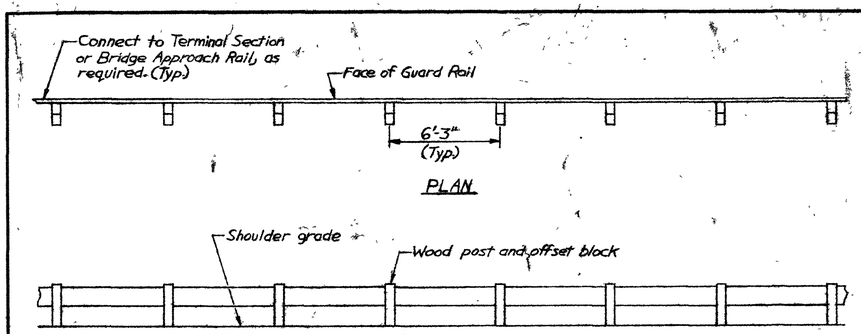

ELEVATION

STANDARD SECTION
Scale: 1/4" = 1'-0"

Notes: 1. Beam guard rail shall be installed where shown on the Roadway Plan or Rail Layout sheet.
2. Where it is to be connected to bridge approach rail, the end of the beam guard rail shall be modified as shown on the Bridge Approach Rail sheet.
3. Pay items: 606.140, Beam Guard Rail (Standard Section) GR-140
606.143, Beam Guard Rail including Terminal Sections GR-143
4. Payment shall be by the linear foot, from center to center of rail posts.

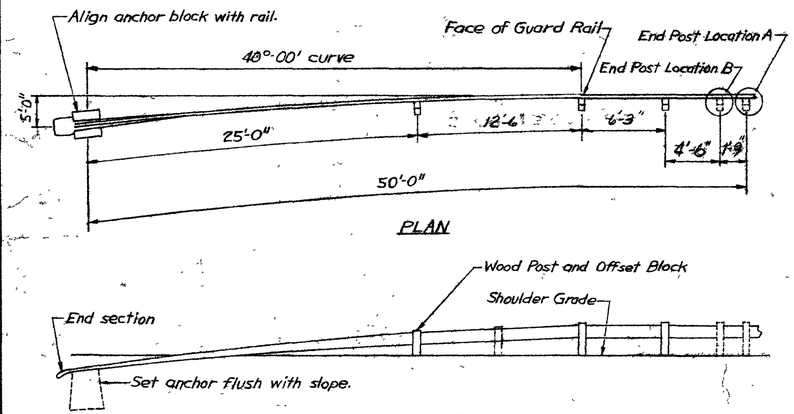

ELEVATION

TERMINAL UNIT, TYPE F (MODIFIED)
Scale: 3/16" = 1'-0"

Notes: 1. Terminal units shall be installed where shown on the Roadway Plan or Rail Layout sheet.
2. End rail post to be installed in Location A when Terminal Unit is to be connected to beam guard rail, and in Location B when Terminal Unit is to be connected to bridge approach rail.
3. Payment for Beam Guard Rail (Terminal Unit Type F, Modified) GR-1461, Item 606.1461 shall be as a lump sum to include rail, posts, end section, and anchor.

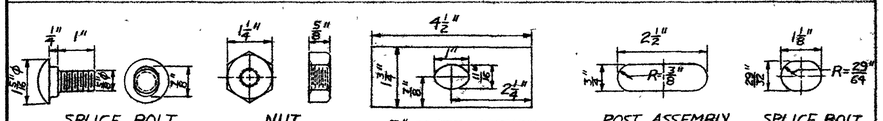

SPLICE BOLT — NUT — 3/16" PLATE WASHER — POST ASSEMBLY SLOT — SPLICE BOLT SLOT

HARDWARE DETAILS
Scale: 6" = 1'-0"

Note: Post bolt similar to splice bolt except for length.
All hardware shall be galvanized.

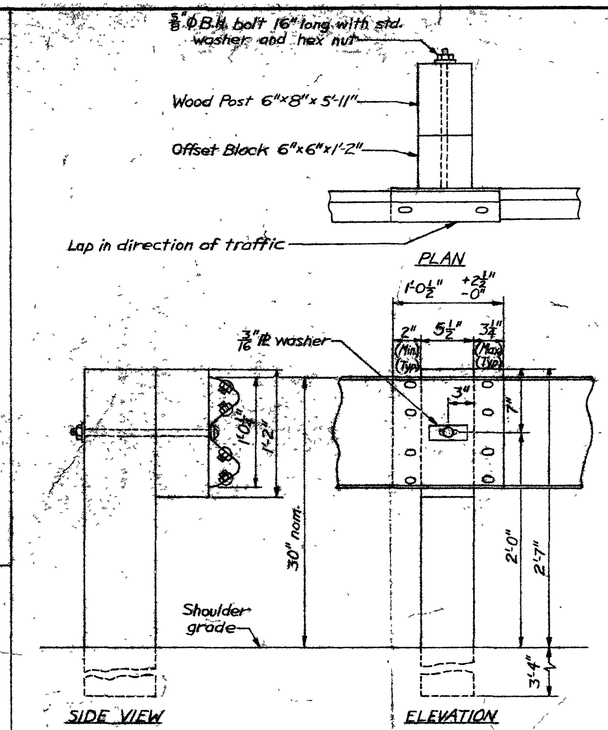

TYPICAL RAIL POST
Scale: 1 1/2" = 1'-0"

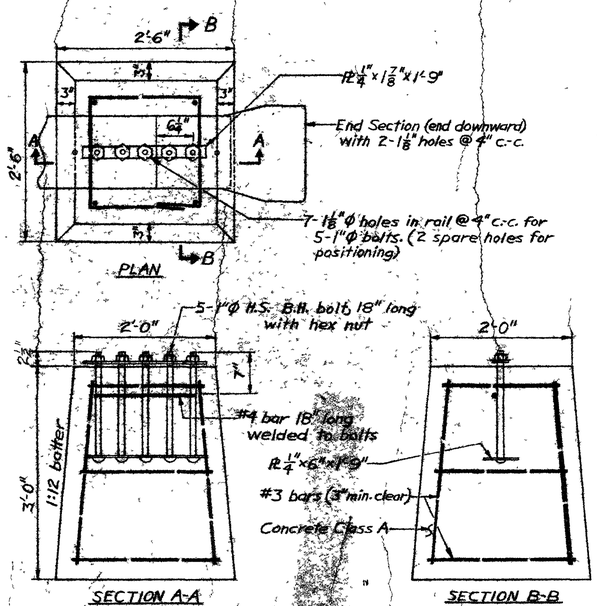

CONCRETE ANCHOR DETAIL
Scale: 1" = 1'-0"

Note: Anchor to be used with Terminal Unit, Type F (Modified).

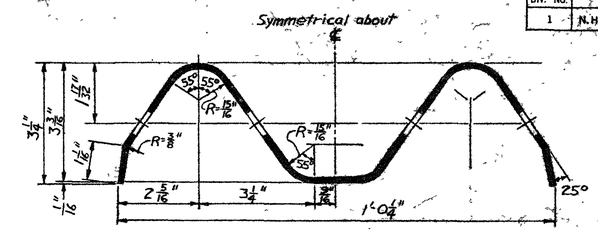

TYPICAL SECTION OF GUARD RAIL
Scale: 6" = 1'-0"

Note: Beam guard rail to be 12 gage. See Hardware Details for slot dimensions.

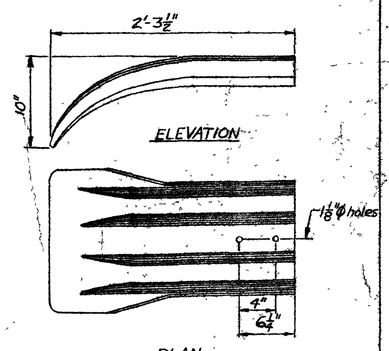

END SECTION
Scale: 1 1/2" = 1'-0"

Note: End section to be used with Terminal Unit, Type F (Modified)

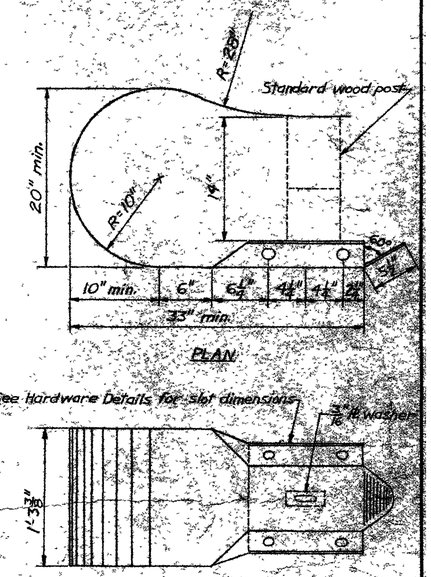

TERMINAL SECTION
Scale: 1 1/2" = 1'-0"

Note: Terminal section to be used with Beam Guard Rail including Terminal Sections, Item 606.143. Length of terminal section shall not be included in the pay length.

STATE OF NEW HAMPSHIRE
DEPARTMENT OF TRANSPORTATION
BUREAU OF BRIDGE DESIGN

TOWN FRANKLIN-NORTHFIELD BRIDGE NO. 184/127
FEDERAL PROJECT BRZ-163(1) STATE PROJECT T-4198
LOCATION CROSS MILL ROAD OVER WINNIPESAUKEE RIVER

Δ	DESCRIPTION	BY	DATE
	REVISIONS		

	BY	DATE		BY	DATE
DESIGNED			CHECKED		
DRAWN			CHECKED		
TRACED	RRS	5-74	CHECKED	WAB	7-74
QUANTITIES			CHECKED		

BEAM GUARD RAIL

BRIDGE SHEET NO. ___ OF ___
FILE NUMBER 5-5-3-3

REVIEWED BY

ANDREWS & CLARK, INC.

PROJ. NO. BRZ-163(1) | SHEET NO. 3 | TOTAL SHEETS 30

TYPICAL SECTION OF IMPROVEMENT : 10-4-4

FED. ROAD DIV. NO.	STATE	PROJ.	FISCAL YEAR	SHEET NO.	TOTAL SHEETS
1	N.H.				

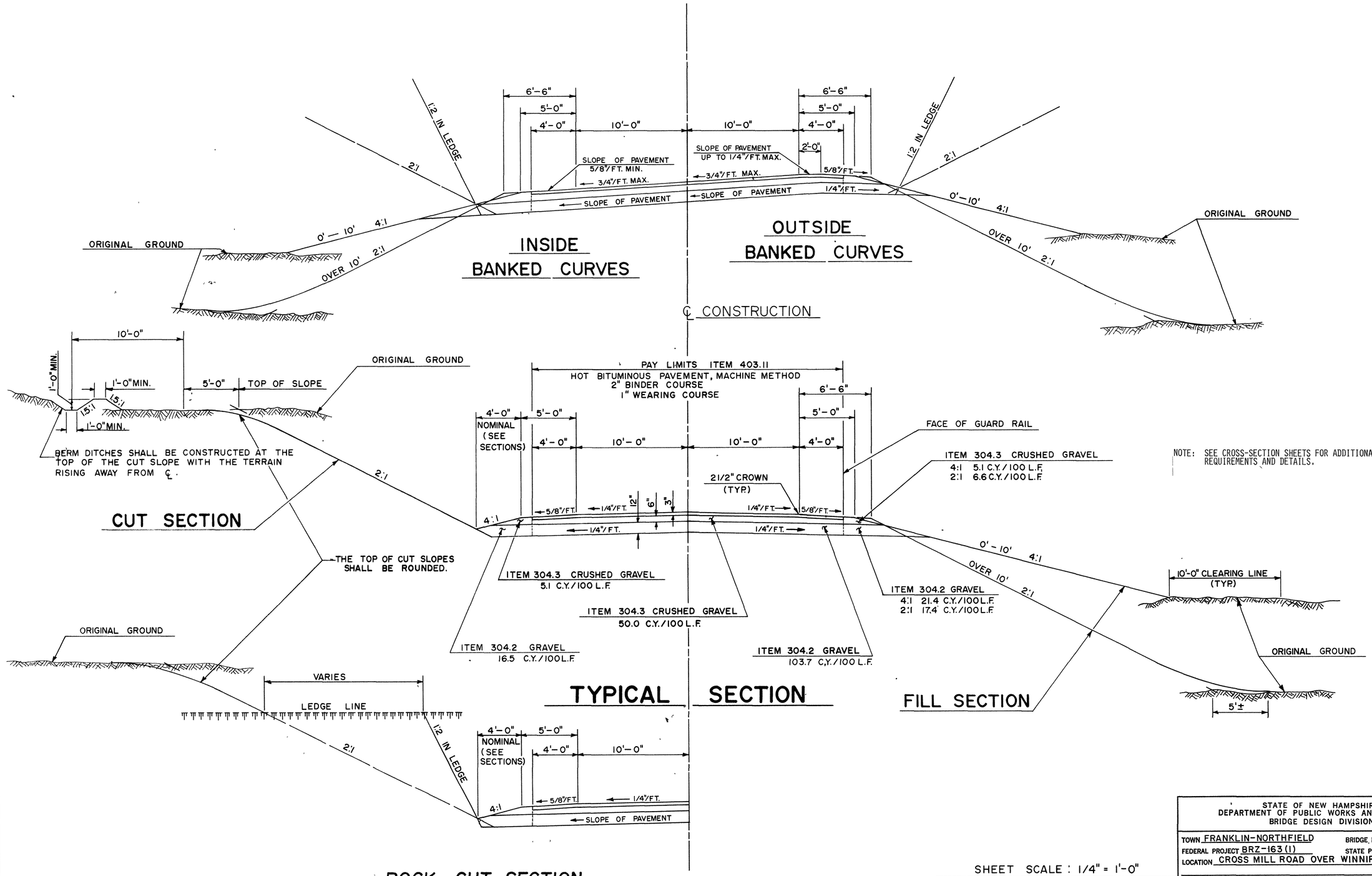

NOTE: SEE CROSS-SECTION SHEETS FOR ADDITIONAL REQUIREMENTS AND DETAILS.

SHEET SCALE : 1/4" = 1'-0"

Δ	DESCRIPTION	BY	DATE

REVISIONS

ANDREWS & CLARK, INC.

STATE OF NEW HAMPSHIRE
DEPARTMENT OF PUBLIC WORKS AND HIGHWAYS
BRIDGE DESIGN DIVISION

TOWN FRANKLIN-NORTHFIELD BRIDGE NO. 184/127
FEDERAL PROJECT BRZ-163(1) STATE PROJECT T-4198
LOCATION CROSS MILL ROAD OVER WINNIPESAUKEE RIVER

TYPICAL SECTION OF IMPROVEMENT

	BY	DATE		BY	DATE	BRIDGE SHEET NO.
DESIGNED MWR		1/85	CHECKED GMC		1/85	OF
DRAWN MWR		1/85	CHECKED GMC		1/85	FILE NUMBER
TRACED			CHECKED			5-5-3-3
QUANTITIES MWR		1/85	CHECKED TCC		1/85	

REVIEWED BY	PROJ. NO.	SHEET NO.	TOTAL SHEETS
	BRZ-163(1)	4	30

BRUNING 53232

FED. ROAD DIV. NO.	STATE	PROJ.	FISCAL YEAR	SHEET NO.	TOTAL SHEETS
1	N.H.				

R.O.W. VERIFIED 3-29-90 GEORGE DEZIEL

DRAINAGE:

A. CONSTRUCT CATCH BASIN TYPE B (ITEM 604.12) WITH ALTERNATE 1 GRATE.
STA. 104+50 13' RT., STA. 104+62 13' LT.
STA. 106+94 13' RT., STA. 107+12 13' LT.
STA. 108+00 20' LT., STA. 107+50 13' RT.

B. CONSTRUCT 18" CORRUGATED STEEL PIPE 0.064" INCL. SPEC. EXC. (ITEM 603.1105) AT:
STA. 104+50 - STA. 104+62, STA. 104+50 - STA. 104+70(±)
STA. 106+85(±) - STA. 107+06, STA. 106+94 - STA. 107+06,
STA. 107+06 - STA. 108+00 & STA. 108+00 - STA. 108+50

C. CONSTRUCT STEEL END SECTIONS FOR 18" PIPE INCL. SPEC. EXC. (ITEM 603.34118) AT:
STA. 104+70(±) & STA. 106+85(±)

D. CONSTRUCT STONE LINED DITCH, STONE FILL CLASS C (ITEM 585.3) AT:
STA. 106+56(±) - STA. 108+20(±), 25' - 30' RT.
STA. 108+00 - STA. 109+20(±), 20' - 24' LT.

DRIVEWAYS:

A. CONSTRUCT PAVED APPROACH OR DRIVES AS SHOWN OR AS DIRECTED BY THE ENGINEER AT:
STA. 103+50(±) RT., STA. 109+70(±) RT., & STA. 110+00(±) LT.

B. CONSTRUCT GRAVEL DRIVE AS SHOWN OR AS DIRECTED BY THE ENGINEER AT:
STA. 110+10(±) RT.

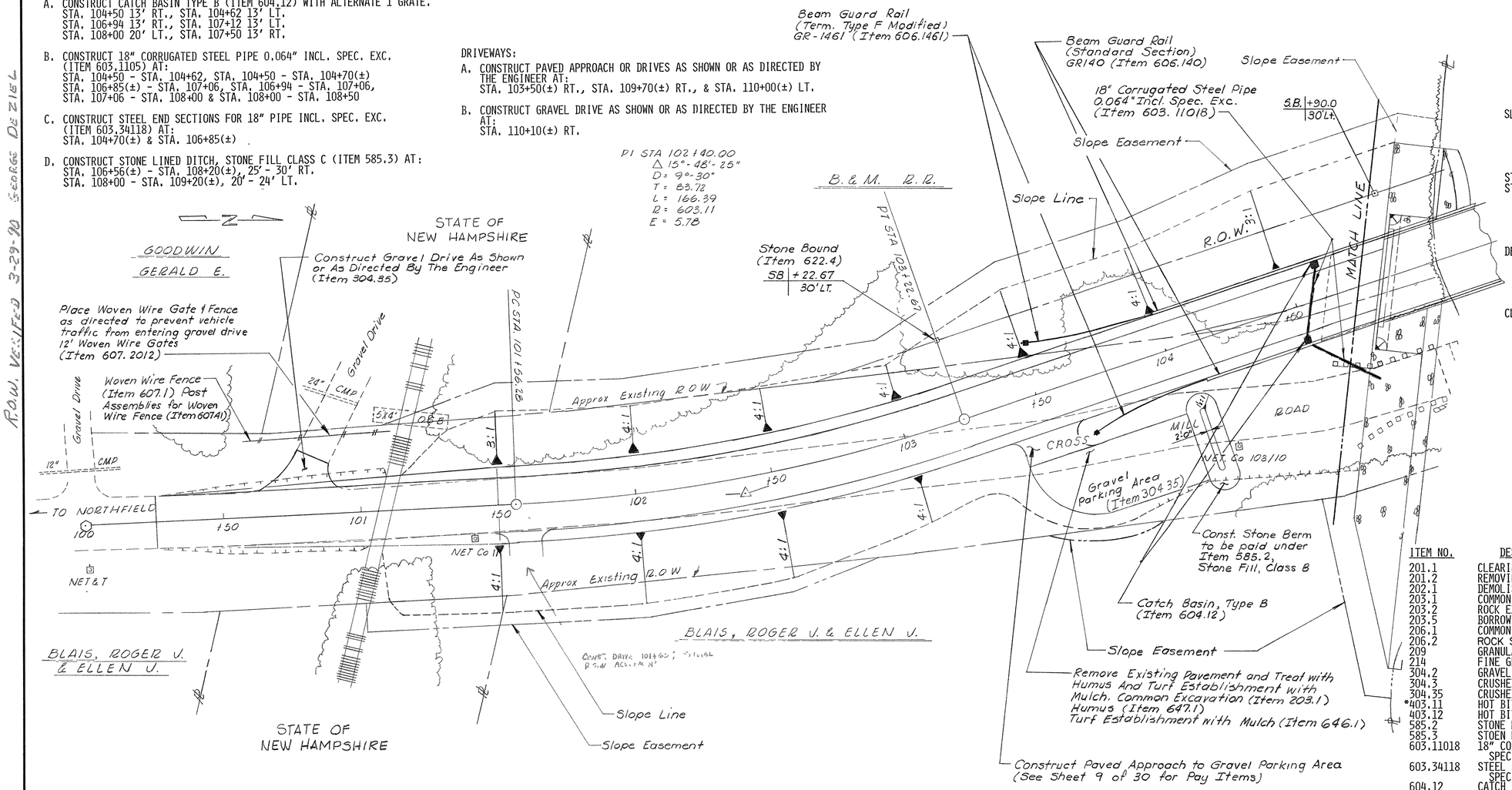

SLOPE TREATMENT
ALL NEW SLOPE AND DISTURBED AREAS TO BE TREATED WITH:
HUMUS (ITEM 647.1)
TURF ESTABLISHMENT WITH MULCH (ITEM 646.1)

STONE BOUNDS (ITEM 622.4)
STONE BOUND SHALL BE SET AT:
STA. 103+22.67 30' LT., STA. 104+90 30' LT.
STA. 106+69.28 30' LT., STA. 108+43.17 25' LT.
STA. 108+43.17 30' LT., STA. 109+54.45 25' LT.

DELINEATOR
SINGLE DELINEATOR WITH POST (WHITE) (ITEM 621.31) SHALL BE INSTALLED LT. & RT. AS DIRECTED BY THE ENGINEER.

CLEARING OF TREES
ALL TREES CUT FOR ROADWORK AND R.O.W. SHALL BE CUT IN 4 FOOT LENGTHS AND STACKED ON ADJACENT PROPERTY OF OWNERS, AS DIRECTED. THE BURNING OR BURYING OF CORDWOOD OR BRUSH SHALL NOT BE PERMITTED.

SUMMARY OF ROADWAY QUANTITIES

ITEM NO.	DESCRIPTION	QUANTITIES	UNIT
201.1	CLEARING & GRUBBING	0.7	ACRE
201.2	REMOVING SMALL TREES	3	EACH
202.1	DEMOLISHING BUILDINGS SUBJECT TO PRIOR REMOVAL	1	UNIT
203.1	COMMON EXCAVATION	1500	C.Y.
203.2	ROCK EXCAVATION	10	C.Y.
203.5	BORROW	2250	C.Y.
206.1	COMMON STRUCTURE EXCAVATION	150	C.Y.
206.2	ROCK STRUCTURE EXCAVATION	50	C.Y.
209	GRANULAR BACKFILL	50	C.Y.
214	FINE GRADING	1	UNIT
304.2	GRAVEL	1200	C.Y.
304.3	CRUSHED GRAVEL	500	C.Y.
304.35	CRUSHED GRAVEL FOR UNPAVED DRIVES	75	C.Y.
*403.11	HOT BITUMINOUS PAVEMENT, MACHINE METHOD	425	TON
403.12	HOT BITUMINOUS PAVEMENT, HAND METHOD	15	TON
585.2	STONE FILL, CLASS B	30	C.Y.
585.3	STOEN FILL, CLASS C	150	C.Y.
603.11018	18" CORRUGATED STEEL PIPE, 0.064" INCL. SPEC. EXCAVATION	268	L.F.
603.34118	STEEL END SECTIONS FOR 18" PIPE INCL. SPEC. EXCAVATION	2	EACH
604.12	CATCH BASINS TYPE B	6	UNIT
606.140	BEAM GUARD RAIL (STANDARD SECTION), GR-140	275	L.F.
606.1461	BEAM GUARD RAIL (TERMINAL UNIT TYPE F, MODIFIED) GR-1461	4	UNIT
607.1	WOVEN WIRE FENCE	50	L.F.
607.2012	12 FT. WIRE GATES	1	EACH
607.41	POST ASSEMBLIES FOR WOVEN WIRE FENCE	4	EACH
609.01	STRAIGHT GRANITE CURB A	148	L.F.
609.21	STRAIGHT GRANITE SLOPE CURB	160	L.F.
609.22	STRAIGHT GRANITE SLOPE CURB WITH RADIAL JOINTS	30	L.F.
618.7	FLAGGERS	500	HR.
619.1	MAINTENANCE OF TRAFFIC INCLUDING DUST LAYING	1	UNIT
619.2	CONSTRUCTION SIGNS AND WARNING DEVICES	1	UNIT
621.31	SINGLE DELINEATOR WITH POST (WHITE)	18	EACH
622.4	STONE BOUNDS	6	EACH
646.1	TURF ESTABLISHMENT WITH MULCH	1.1	ACRE
647.1	HUMUS	350	C.Y.
692	MOBILIZATION	1	UNIT
698.11	FIELD OFFICES (MODIFIED)	1	EACH
**699	TEMPORARY PROJECT WATER POLLUTION CONTROL		$

* NOT AN ITEM TOTAL, SEE SHEET NO. 13 OF 30 FOR ADDITIONAL QUANTITY.
** NOT A BID ITEM

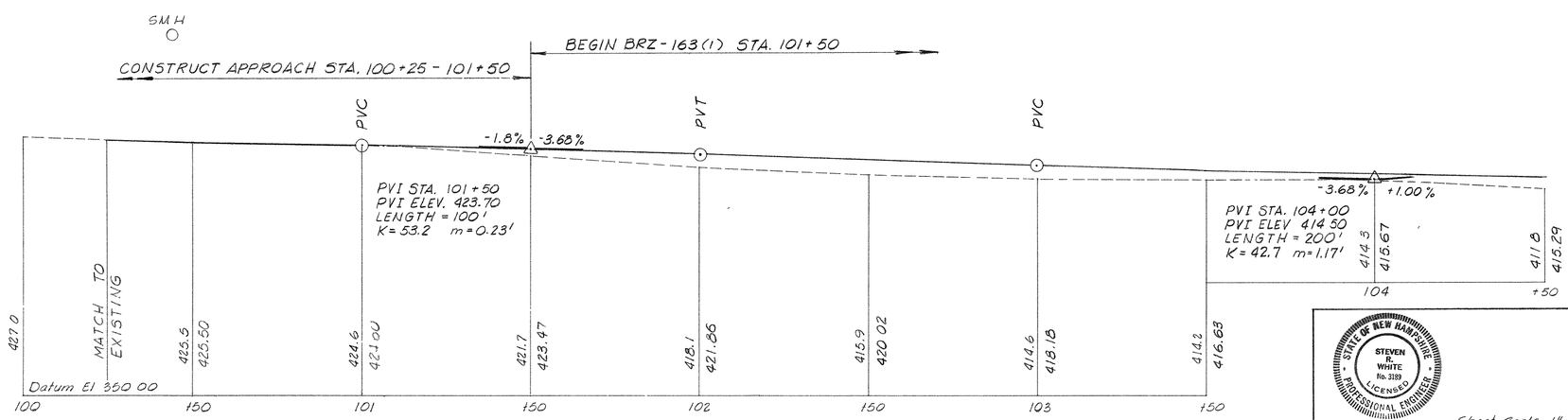

PROFILE OF CROSS MILL ROAD

STATE OF NEW HAMPSHIRE
STEVEN R. WHITE
No. 3139
LICENSED
PROFESSIONAL ENGINEER

Sheet Scale 1" = 20'-0"

Δ	DESCRIPTION	BY	DATE
	R.O.W. VERIFIED GRD 3-29-90		

REVISIONS

ANDREWS & CLARK, INC.

STATE OF NEW HAMPSHIRE
DEPARTMENT OF TRANSPORTATION
BRIDGE DESIGN DIVISION

TOWN FRANKLIN NORTHFIELD — BRIDGE NO. 184/127
FEDERAL PROJECT BRZ-163(1) — STATE PROJECT T-4198
LOCATION CROSS MILL ROAD OVER WINNIPESAUKEE RIVER

ROADWAY PLAN AND PROFILE (1 of 2)

	BY	DATE		BY	DATE
DESIGNED	NHDOT/MG	9/87	CHECKED	MG	9/87
DRAWN	NHDOT/NJC	9/87	CHECKED	MG	9/87
TRACED			CHECKED		
QUANTITIES			CHECKED		

BRIDGE SHEET NO. OF
FILE NUMBER 5-5-3-3

REVIEWED BY	PROJ. NO.	SHEET NO.	TOTAL SHEETS
	BRZ-163(1)	5	30

AS BUILT PLANS

BRUNING 53232

FED. ROAD DIV. NO.	STATE	PROJ.	FISCAL YEAR	SHEET NO.	TOTAL SHEETS
1	N.H.				

R.O.W. VERIFIED 3-29-90 Stamper Dezinek

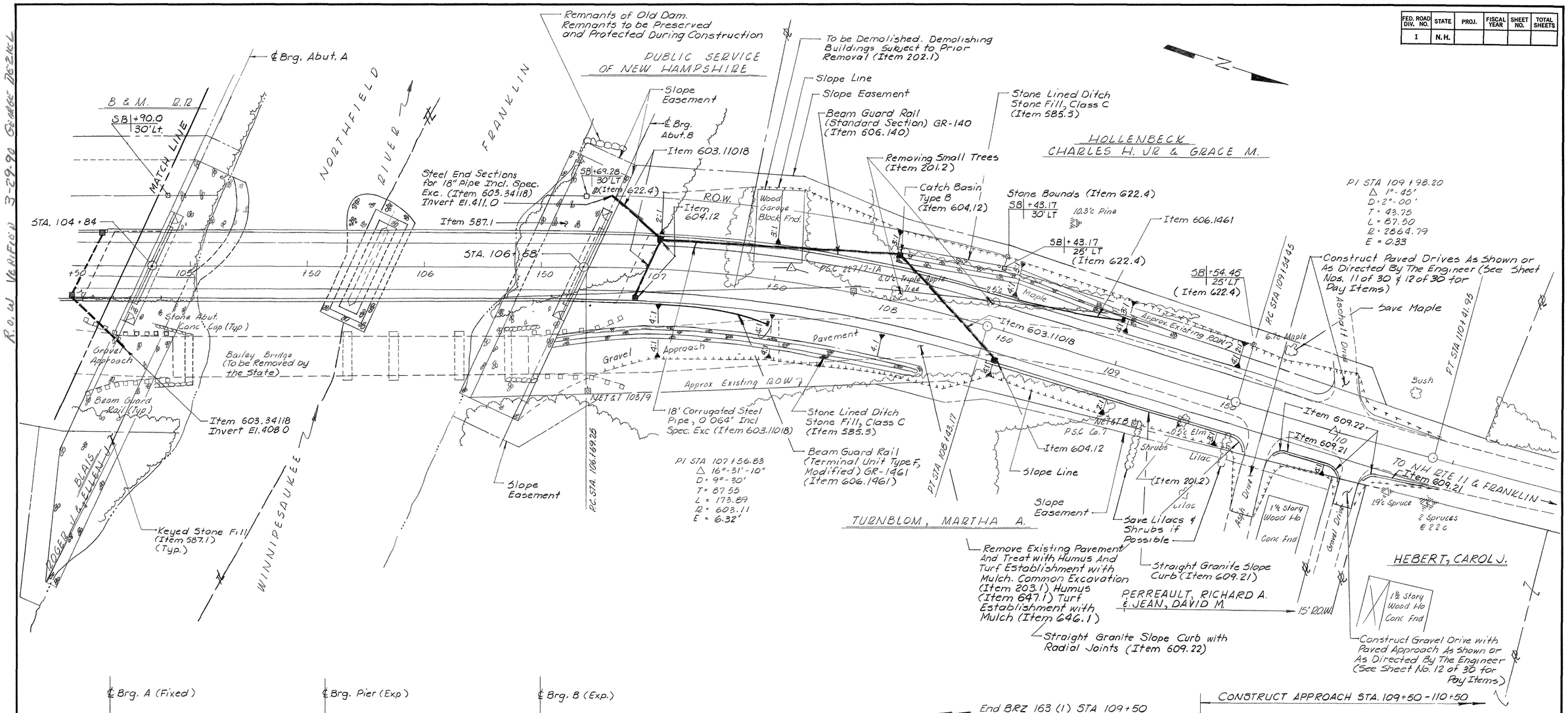

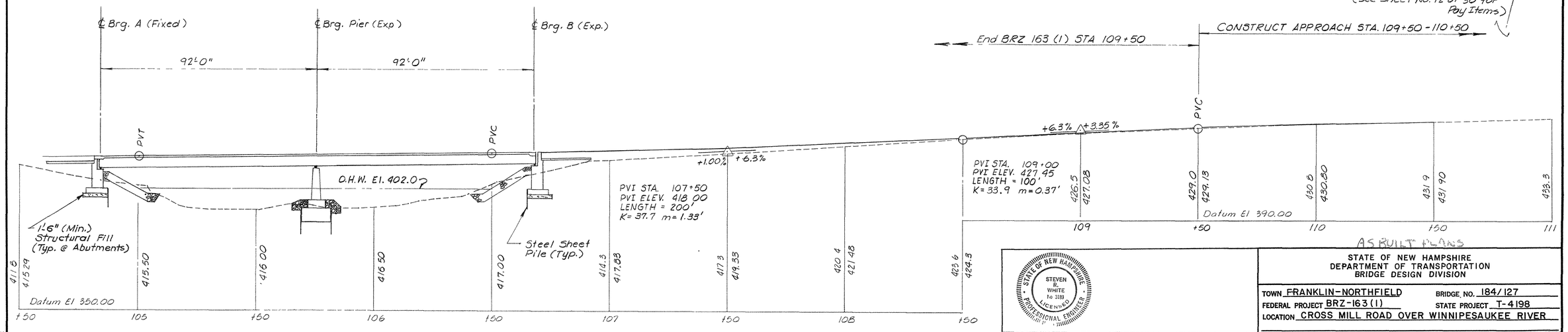

PROFILE OF CROSS MILL ROAD

Sheet Scale 1" = 20'-0"

AS BUILT PLANS

STATE OF NEW HAMPSHIRE
DEPARTMENT OF TRANSPORTATION
BRIDGE DESIGN DIVISION

TOWN FRANKLIN-NORTHFIELD — BRIDGE, NO. 184/127
FEDERAL PROJECT BRZ-163(1) — STATE PROJECT T-4198
LOCATION CROSS MILL ROAD OVER WINNIPESAUKEE RIVER

STATE OF NEW HAMPSHIRE — STEVEN R. WHITE No. 3189 — LICENSED PROFESSIONAL ENGINEER

ROADWAY PLAN AND PROFILE (2 of 2)

	BY	DATE		BY	DATE
DESIGNED NHDOT/MG		9/87	CHECKED MG		9/87
DRAWN NHDOT/NJC		9/87	CHECKED MG		9/87
TRACED			CHECKED		
QUANTITIES			CHECKED		

BRIDGE SHEET NO. OF
FILE NUMBER 5-5-3-3

Δ	DESCRIPTION	BY	DATE
	ROW VERIFIED GRD 3-29-90		

REVISIONS

ANDREWS & CLARK, INC.

REVIEWED BY	PROJ. NO.	SHEET NO.	TOTAL SHEETS
	BRZ-163(1)	6	30

BRUNING 53232

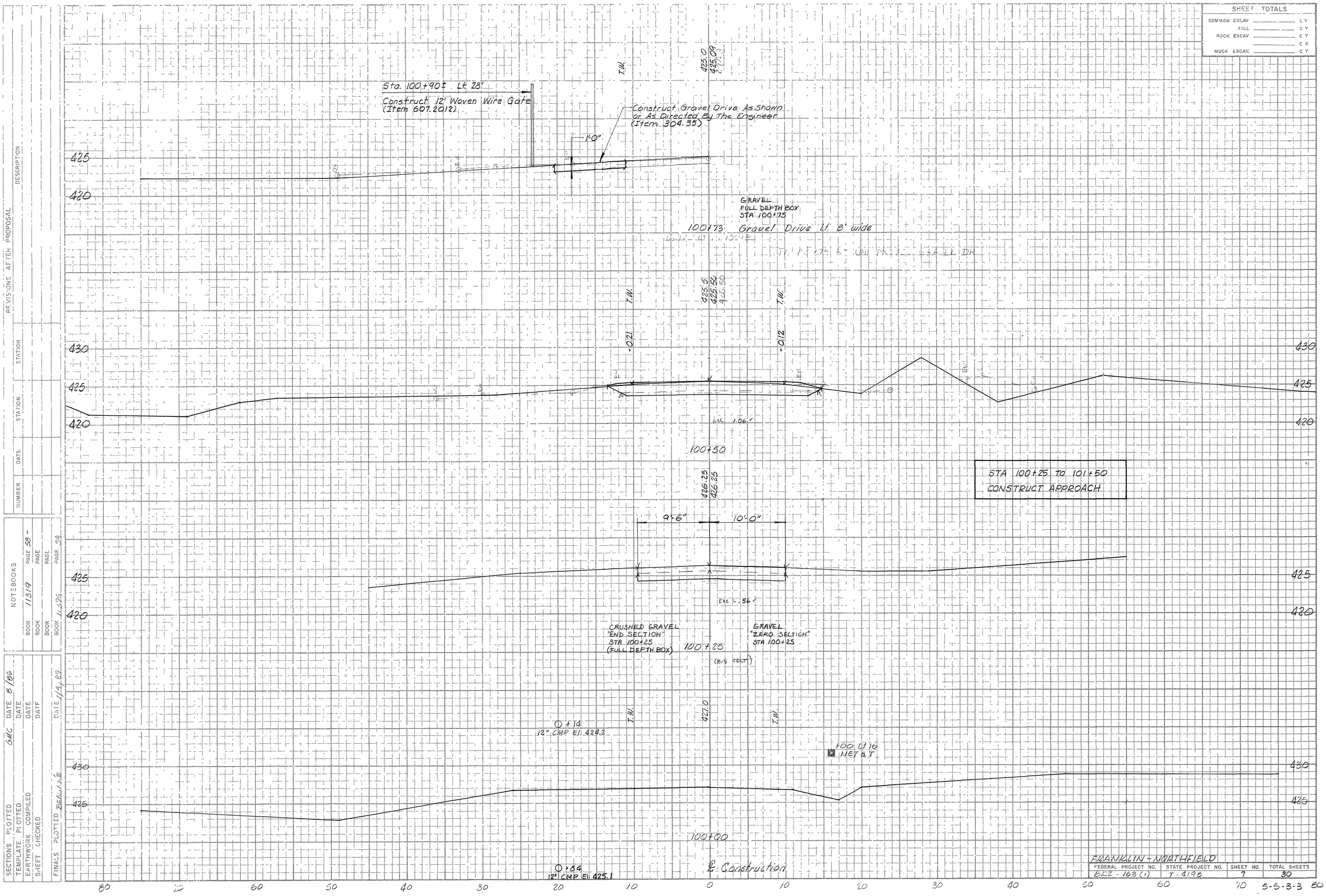

REVISIONS AFTER PROPOSAL			
NUMBER	DATE	STATION	DESCRIPTION

NOTEBOOKS		
BOOK	11319	PAGE 58 -
BOOK		PAGE
BOOK		PAGE
BOOK	11394	PAGE 54

SECTIONS PLOTTED	GMC	DATE 8/85
TEMPLATE PLOTTED		DATE
EARTHWORK COMPILED		DATE
SHEET CHECKED		DATE
FINALS PLOTTED	BEAUBIEN	DATE 1/4/89

FRANKLIN - NORTHFIELD

FEDERAL PROJECT NO.	STATE PROJECT NO.	SHEET NO.	TOTAL SHEETS
BRZ - 163 (1)	T - 4198	7	30

5-5-3-3

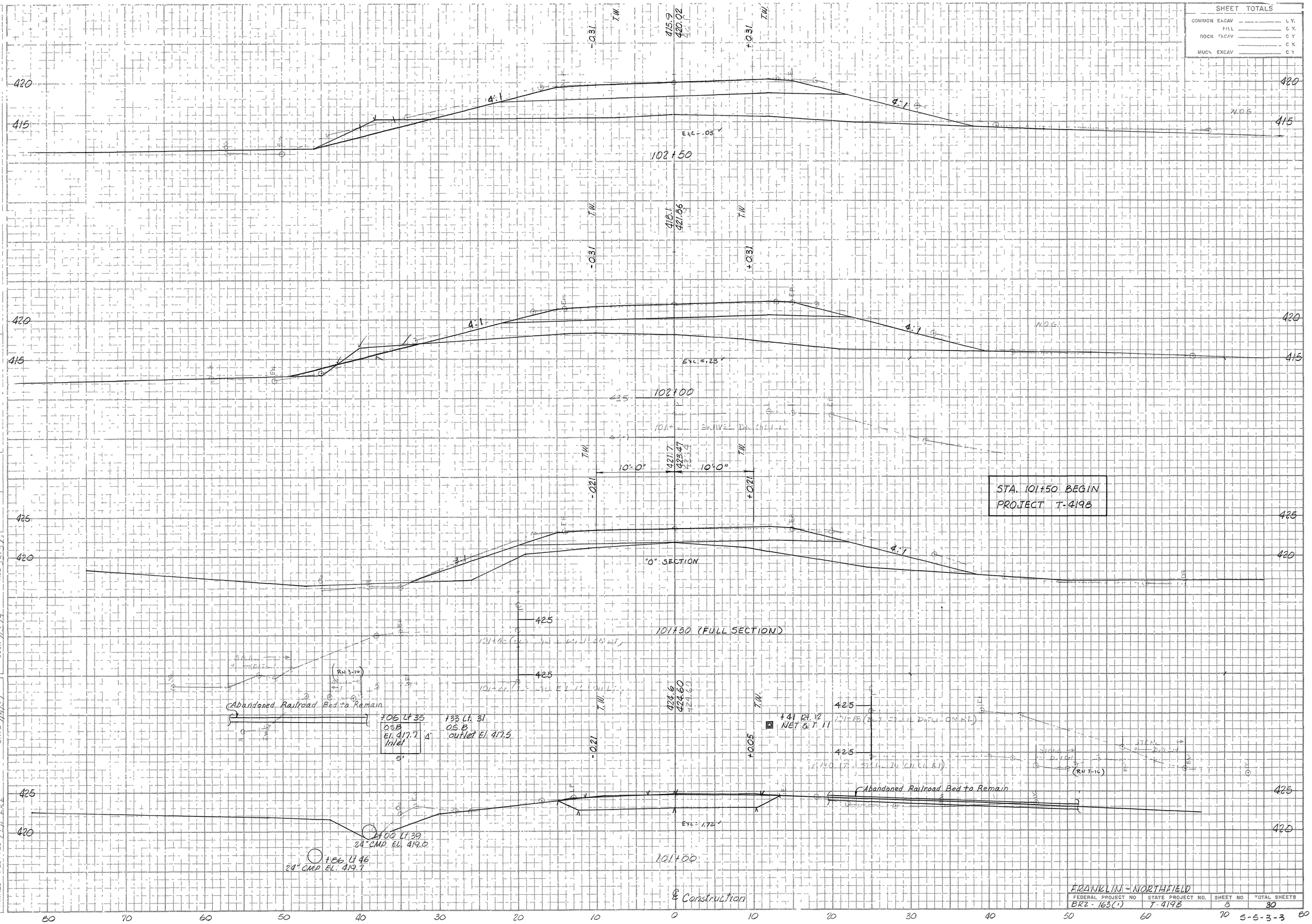

REVISIONS AFTER PROPOSAL

NUMBER	DATE	STATION	STATION	DESCRIPTION

NOTEBOOKS

BOOK	11319	PAGE	58-
BOOK		PAGE	
BOOK		PAGE	
BOOK	11-74	PAGE	5-5

SECTIONS PLOTTED	GMC	DATE	8/85
TEMPLATE PLOTTED		DATE	
EARTHWORK COMPILED		DATE	
SHEET CHECKED		DATE	
FINALS PLOTTED		DATE	1/4/-1

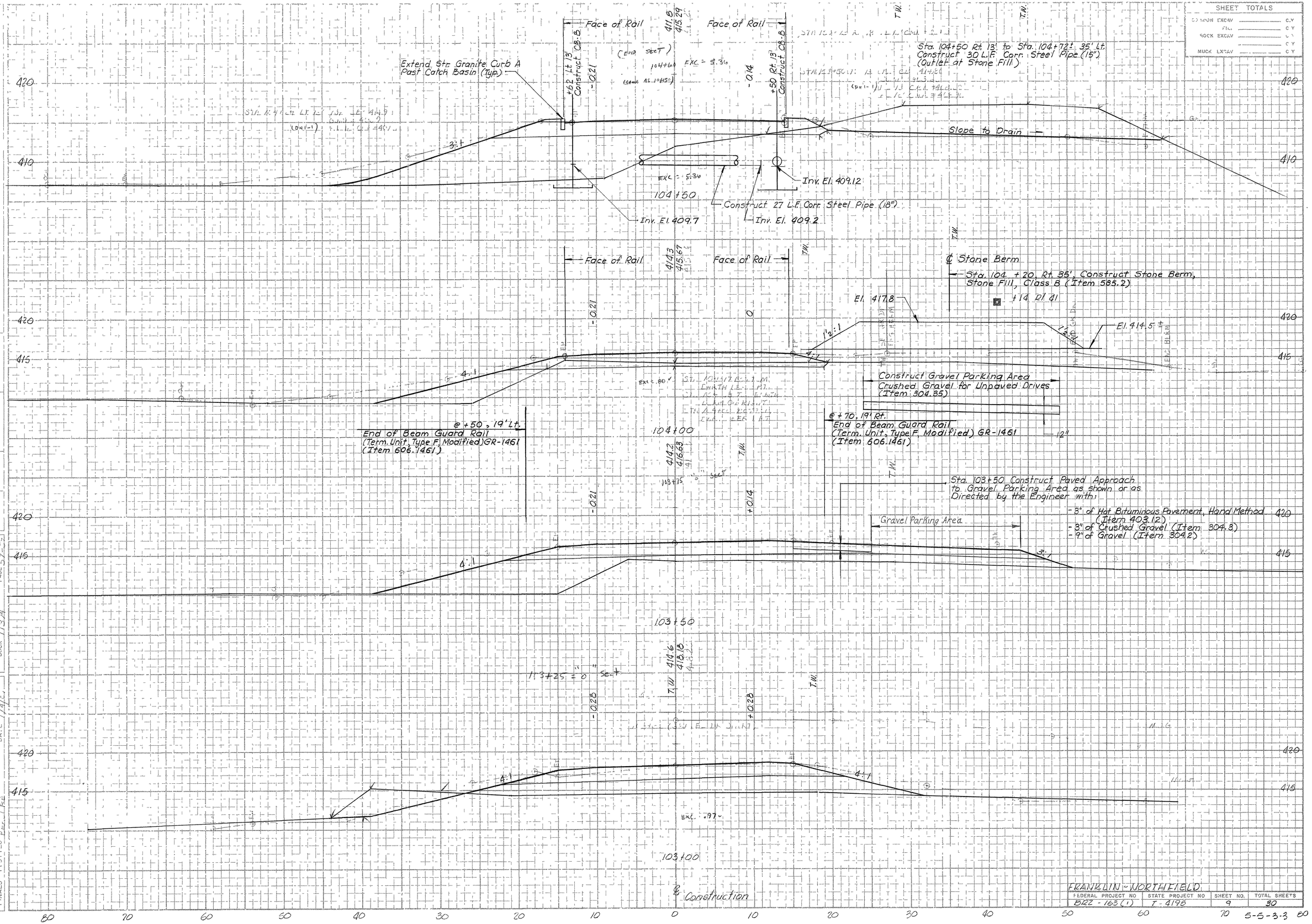

FRANKLIN - NORTHFIELD			
FEDERAL PROJECT NO	STATE PROJECT NO	SHEET NO.	TOTAL SHEETS
BRZ - 163 (1)	T - 4198	9	30

5-5-3-3

REVISIONS AFTER PROPOSAL

NUMBER	DATE	STATION	STATION	DESCRIPTION

NOTEBOOKS

BOOK 1139	PAGE 58	BOOK 1134	PAGE 57
BOOK	PAGE	BOOK	PAGE

SECTIONS PLOTTED	GMC	DATE	8/85
TEMPLATE PLOTTED		DATE	
EARTHWORK COMPILED		DATE	
SHEET CHECKED		DATE	
FINALS PLOTTED		DATE	1/4/85

SHEET TOTALS	
COMMON EXCAV.	C.Y.
FILL	C.Y.
ROCK EXCAV.	C.Y.
	C.Y.
MUCK EXCAV.	C.Y.

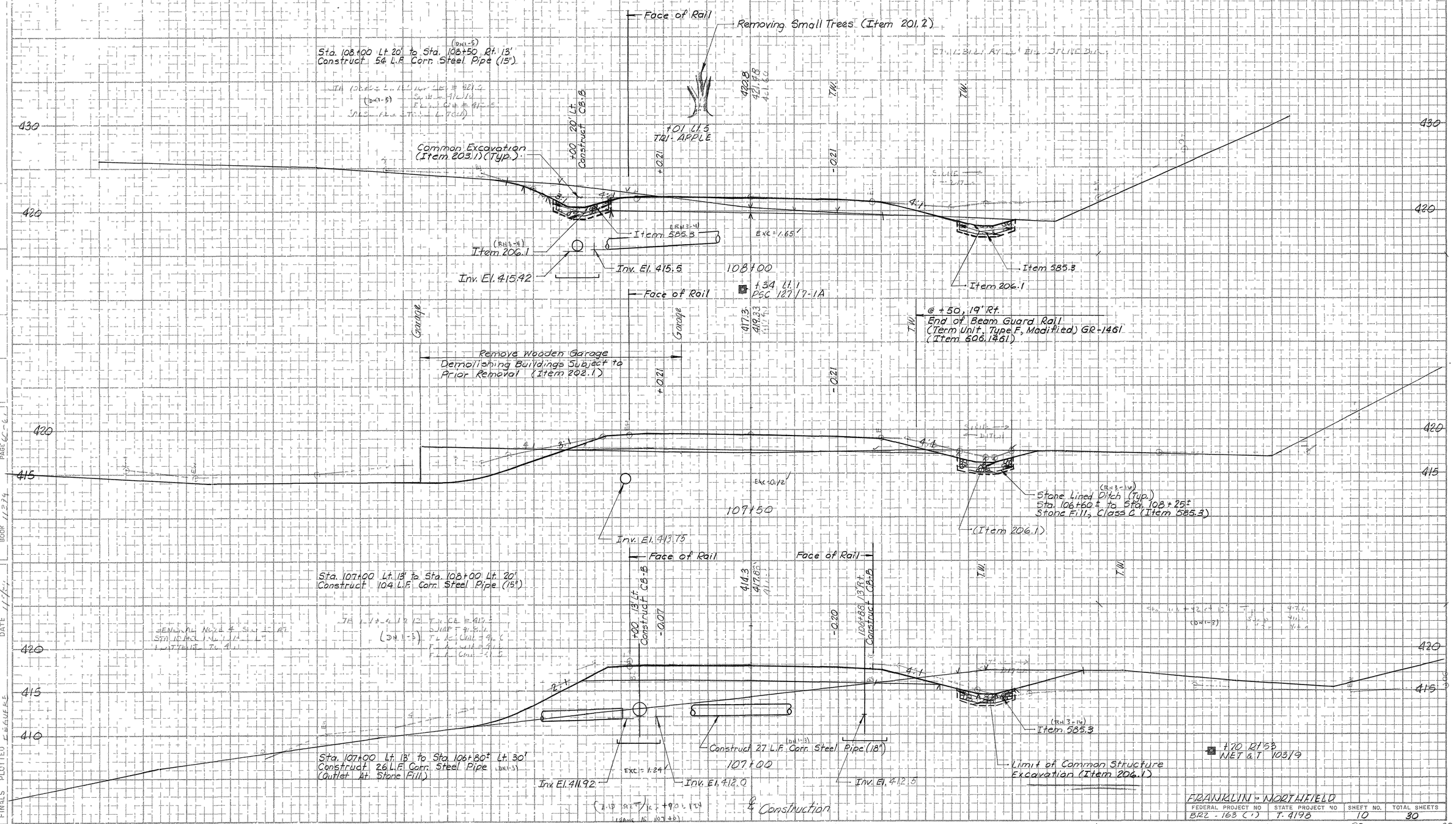

FRANKLIN - NORTHFIELD			
FEDERAL PROJECT NO	STATE PROJECT NO	SHEET NO.	TOTAL SHEETS
BRZ - 163 (1)	T. 4198	10	30

5-5-3-3

REVISIONS AFTER PROPOSAL

NUMBER	DESCRIPTION	STATION	STATION	DATE

NOTEBOOKS

BOOK 1139	PAGE 58 -	BOOK 1124	PAGE 66 - 66
BOOK	PAGE	BOOK	PAGE

SECTIONS PLOTTED	GMC	DATE 8/85	
TEMPLATE PLOTTED		DATE	
EARTHWORK COMPILED		DATE	
SHEET CHECKED		DATE	
FINALS PLOTTED	L. BAUER	DATE 11-7-85	

BRIDGING AS LAID DOWN

SHEET TOTALS	
COMMON EXCAV.	C.Y.
FILL	C.Y.
ROCK EXCAV.	C.Y.
	C.Y.
MUCK EXCAV.	C.Y.

Maple Tree to Remain

+71 Lt 28
6.7c Maple

Sta. 109+69 Construct
Paved Drive As Shown or As Directed By The Engineer With
3" of Hot Bituminous Pavement, Hand Method (Item 403.12)
3" of Crushed Gravel (Item 304.3)
9" of Gravel (Item 304.2)

109+69 10' wide Asphalt Dr. Rt.

STA. 109+50 TO 110+50
CONSTRUCT APPROACH

Item 609.21

STA 109+50 END
PROJECT T-4198

109+50

Removing Small Trees (Item 201.2)

+35 Rt 14
0.5c Elm

@ +00, 19' Lt.
End of Beam Guard Rail
(Term. Unit, Type F, Modified)
GR-1461 (Item 606.1461)

Shrubs to Remain

+16 Rt 21 (Shrubs)

+15 Rt 21
NET @ T B
P.B.C. 7

Common Excavation
(Item 203.1) (Typ.)

Item 609.21

Stone Lined Ditch
Stone Fill, Class C
(Item 585.3) (Typ.)

Item 206.1

Sta. 108+45± to 109+64±
Construct Granite Slope Curbs
(Curve at Drive as required)

109+00

Face of Rail

Straight Granite Slope Curb
(Item 609.21)

+50 13' Rt
Construct CB B

Limit of Common
Structure Excavation
(Item 206.1)

NOTE ON [illegible] IN BROWN.
AT REF. UNIT B/N
PL [illegible] KNA A-[illegible]
EL [illegible]
[illegible]
Q [illegible]
(PERTINENT TO STA 108+50
AND STA 109+00)

Item 585.3

Removing Small Trees
(Item 201.2)

+40 Lt 10
2.5c Maple

Inv. El. 419.0

108+50

℄ Construction

FRANKLIN - NORTHFIELD			
FEDERAL PROJECT NO	STATE PROJECT NO.	SHEET NO	TOTAL SHEETS
BRZ-163(1)	T-4198	11	30

S-S-3-3

REVISIONS AFTER PROPOSAL

NUMBER	DATE	DESCRIPTION	STATION	STATION

NOTEBOOKS

BOOK 113/9	PAGE 80	BOOK 112-24	PAGE 62-65
BOOK	PAGE	BOOK	PAGE

SECTIONS PLOTTED		GAL.	DATE 8/05
TEMPLATE PLOTTED			DATE
EARTHWORK COMPILED			DATE
SHEET CHECKED			DATE
FINALS PLOTTED	BEAVER		DATE 1/1/83

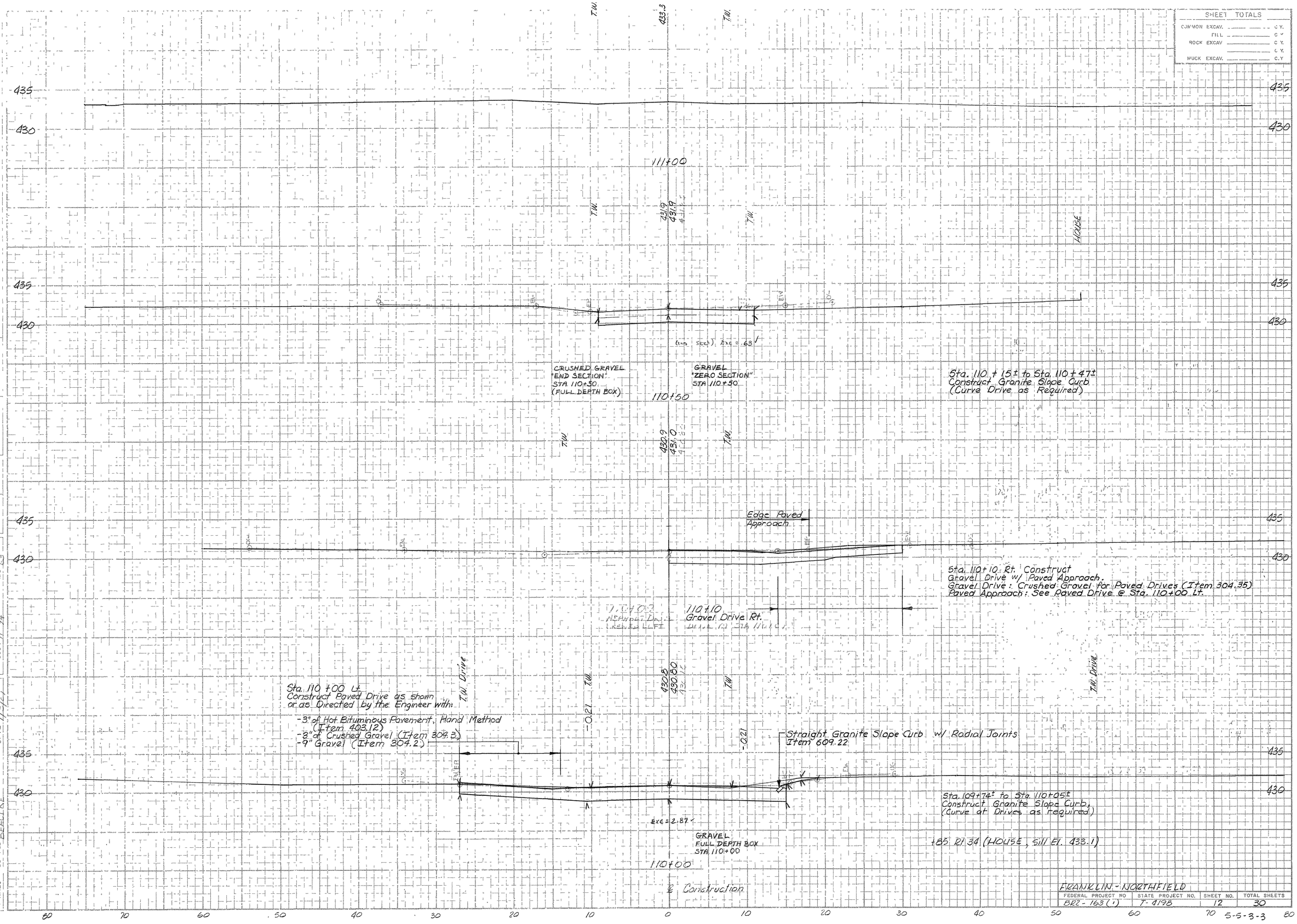

FRANKLIN - NORTHFIELD			
FEDERAL PROJECT NO	STATE PROJECT NO.	SHEET NO.	TOTAL SHEETS
BRZ - 163 (1)	T - 4198	12	30

5-5-3-3

REVISIONS AFTER PROPOSAL

NUMBER	DATE	STATION	STATION	DESCRIPTION

NOTEBOOKS

BOOK	11319	PAGE	58-
BOOK		PAGE	
BOOK		PAGE	
BOOK	11 94	PAGE	63

SECTIONS PLOTTED	GMC	DATE	8/85
TEMPLATE PLOTTED		DATE	
EARTHWORK COMPILED		DATE	
SHEET CHECKED		DATE	
FINALS PLOTTED	BEAULIE	DATE	11/5/84

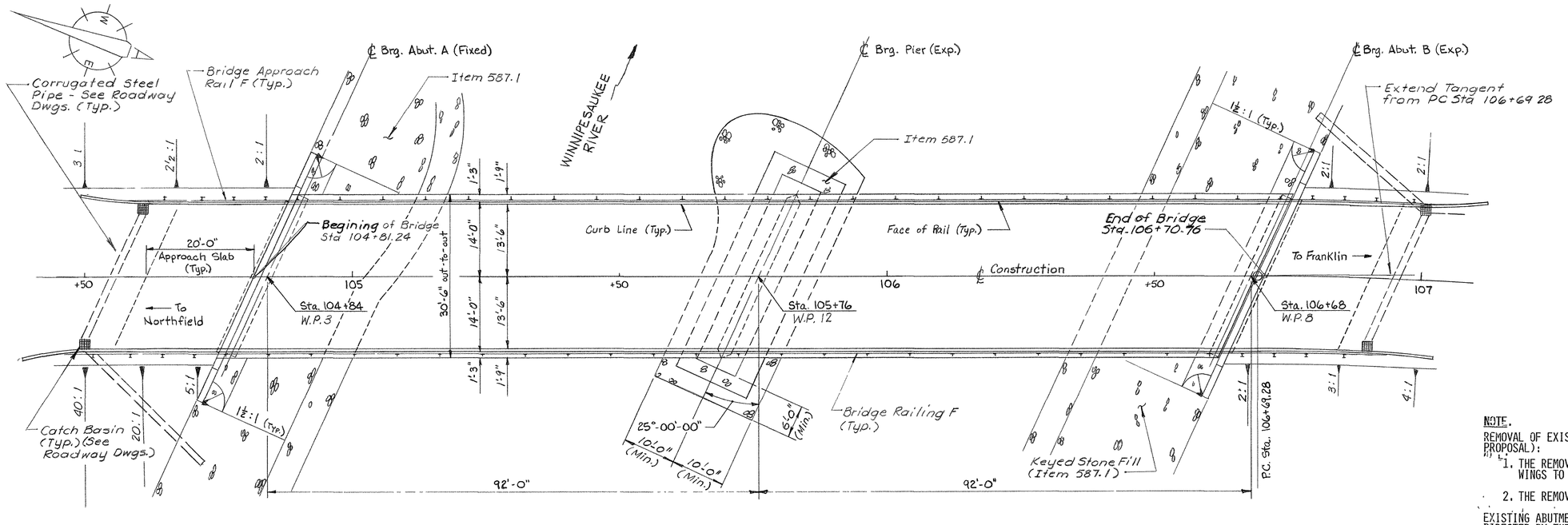

PLAN
Scale: 3/32" = 1'-0"

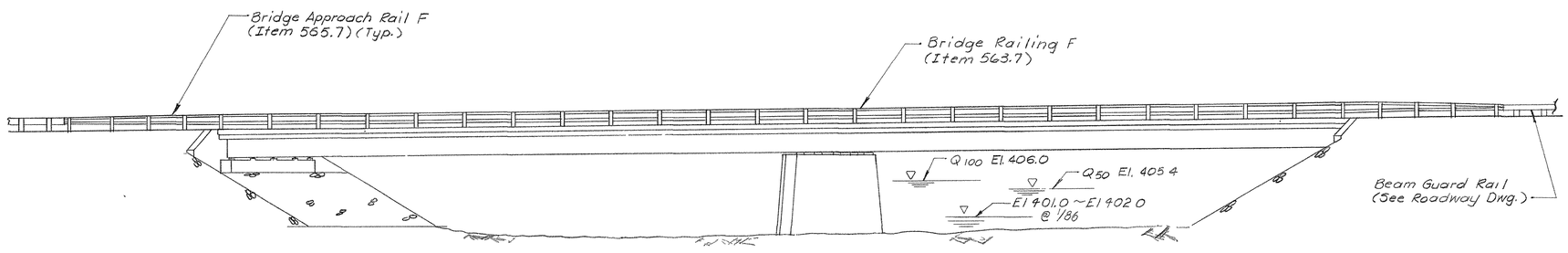

ELEVATION
Scale: 3/32" = 1'-0"

NOTE.

REMOVAL OF EXISTING STRUCTURE, ITEM 502, SHALL INCLUDE (SEE PROPOSAL):

1. THE REMOVAL OF THE EXISTING ABUTMENTS AND STEEL PILE WINGS TO 3'-0" BELOW FINAL GROUND.

2. THE REMOVAL OF THE EXISTING PIERS TO STREAMBED.

EXISTING ABUTMENT & PIER STONES MAY BE USED FOR STONE FILL AS DIRECTED BY THE ENGINEER. PORTION OF EXISTING ABUTMENT & PIER CONCRETE TO BE REMOVED MAY NOT BE USED FOR STONE FILL.

SUMMARY OF BRIDGE QUANTITIES

ITEM NO.	DESCRIPTION	QUANTITIES	UNIT
207.3	UNCLASSIFIED CHANNEL EXCAVATION	2850	C.Y.
209.1	GRANULAR BACKFILL (BRIDGE)	325	C.Y.
403.11	HOT BITUMINOUS PAVEMENT, MACHINE METHOD	31	TON
403.911	HOT BITUMINOUS BRIDGE PAVEMENT, 1" BASE COURSE WITH POLYESTER FIBER	31	TON
500.01	CONSTRUCTION WORK TRESTLE	1	UNIT
502	REMOVAL OF EXISTING BRIDGE STRUCTURE	1	UNIT
503	COFFERDAMS	1	UNIT
504.1	COMMON BRIDGE EXCAVATION	550	C.Y.
504.2	ROCK BRIDGE EXCAVATION	30	C.Y.
506.2	STEEL SHEET PILING	16,200	LB.
508	STRUCTURAL FILL	60	C.Y.
520.1	CONCRETE CLASS A, ABOVE FOOTINGS (188.3 CY)	1	UNIT
520.1	CONCRETE CLASS A, APPROACH SLABS	42.8	C.Y.
520.2	CONCRETE CLASS B, FOOTINGS	101.5	C.Y.
520.6	CONCRETE CLASS T, FOUNDATION SEAL	122.7	C.Y.
520.7	CONCRETE BRIDGE DECK (167.4 CY)	1	UNIT
534.3	WATER REPELLENT (SILANE-SILOXANE)	21	GAL.
536.11	COATING FOR CONCRETE	275	S.F.
537	CONCRETE SEALER	29	GAL.
538.1	BARRIER MEMBRANE	573	S.Y.
538.2	BARRIER MEMBRANE, VERTICAL SURFACES	47	S.Y.
541.2	PVC WATERSTOPS, NH TYPE 2	26	L.F.
541.5	PVC WATERSTOPS, NH TYPE 5	34	L.F.
544	REINFORCING STEEL	28,179	LB.
544.2	REINFORCING STEEL - EPOXY COATED	54,927	LB.
547	SHEAR CONNECTORS (1460 EA)	1	UNIT
550.1	STRUCTURAL STEEL (162,594 LB)	1	UNIT
550.2	BRIDGE SHOES (15 EA.)	1	UNIT
561.110	PREFABRICATED EXPANSION JOINT, TYPE A (34 LF)	1	UNIT
562.1	ELASTOMERIC SEALANT	42	CU. IN.
563.7	BRIDGE RAILING F	576	L.F.
565.7	BRIDGE APPROACH RAIL F	100	L.F.
587.1	KEYED STONE FILL	1100	C.Y.
609.3	STRAIGHT GRANITE CURB (BRIDGE)	379.4	L.F.

*NOT AN ITEM TOTAL, SEE NOTE 5 OF 30 FOR ADDITIONAL QUANTITIES.

HYDRAULIC DATA

DRAINAGE AREA: 485.0 SQ. MI.
DESIGN FLOOD: Q_{50} = 5050 CFS
DESIGN VELOCITY: Q_{50} = 4.2 FPS
DESIGN FLOOD HEIGHT: Q_{50} EL. = 405.4
BRIDGE OPENING: 1228 SQ. FT. BELOW Q_{100} EL. 406.0

SUBSIDIARY ITEMS

1. 1/2" CORK
2. APPROVED BONDING AGENT
3. NON-SHRINK MORTAR
4. WATERPROOF BUILDING PAPER
5. APPROVED COLORLESS OIL

GENERAL NOTES

DESIGN LIVE LOAD = HS25

DESIGN SPECIFICATIONS

STANDARD SPECIFICATION FOR HIGHWAY BRIDGES, THIRTEENTH EDITION, 1983 BY AMERICAN ASSOCIATION OF STATE HIGHWAY AND TRANSPORTATION OFFICIALS WITH INTERIMS.

MATERIAL AND CONSTRUCTION SPECIFICATIONS

STANDARD SPECIFICATION FOR ROAD AND BRIDGE CONSTRUCTION, 1983, WITH CURRENT ADDITIONS AND MODIFICATIONS, BY STATE OF NEW HAMPSHIRE DEPARTMENT OF TRANSPORTATION.

SUBSTRUCTURE

CONTILEVER ABUTMENT AND WINGWALLS WITH SPREAD FOOTINGS FOUNDED ON STRUCTURAL FILL. MAXIMUM FOUNDATION PRESSURE = 3 TONS/SF.

SOLID SHAFT PIER WITH SPREAD FOOTING FOUNDED ON TREMIE CONCRETE FOUNDATION.

FROST COVER: 5'-0" MINIMUM

MATERIALS

1) CONCRETE

CONCRETE DESIGN STRESSES ARE BASED UPON A 28 DAY COMPRESSIVE STRENGTH OF:

F'c = 4000 PSI, CLASS AA FOR DECK SLAB
F'c = 3000 PSI, CLASS B FOR FOOTINGS
F'c = 3000 PSI, CLASS A FOR ABUTMENT, WINGWALL STEMS, PIER STEM & APPROACH SLAB
F'c = 3000 PSI, CLASS T FOR TREMIE FOUNDATION

ALL EXPOSED EDGES OF CONCRETE SHALL BE CHAMFERED 3/4" EXCEPT AS NOTED.

2) BAR REINFORCEMENT

ALL BAR REINFORCEMENT SHALL BE ASTM-A615, GRADE 60.

ALL DECK BAR REINFORCEMENT SHALL BE EPOXY COATED.

CONCRETE COVER MEASURED FROM THE FACE OF THE REINFORCING STEEL SHALL BE 2" EXCEPT AS NOTED.

REINFORCING STEEL IN CURBS SHALL BE PLACED CLEAR OF ANCHOR BOLTS FOR RAILING.

3) STRUCTURAL STEEL & CONNECTIONS

TWO SPAN PLATE GIRDERS IN COMPOSITE ACTION IN THE POSITIVE MOMENT AREA WITH A REINFORCED CONCRETE DECK SLAB USING STUD SHEAR CONNECTORS.

ALL STRUCTURAL STEEL SHALL CONFORM TO ASTM-A588, UNPAINTED.

BOLTED CONNECTION OF STRUCTURAL STEEL ELEMENTS SHALL BE MADE WITH HIGH STRENGTH BOLTS AND SHALL BE ASTM-A325, TYPE 3 INCLUDING NUTS & WASHERS. ALL BOLTED CONNECTIONS SHALL BE FRICTION TYPE.

SHOP AND FIELD WELDING SHALL CONFORM TO THE LATEST EDITION OF THE AWS "STRUCTURAL WELDING CODE D1.1" AS MODIFIED BY THE LATEST EDITION OF AASHTO "STANDARD SPECIFICATION FOR WELDING OF STRUCTURAL STEEL HIGHWAY BRIDGES" AND SHALL FOLLOW SPECIAL REQUIREMENTS FOR A588 STEEL.

STATE OF NEW HAMPSHIRE
STEVEN R. WHITE
No. 3189
LICENSED
PROFESSIONAL ENGINEER

Sheet Scale : 3/32" = 1'-0"

Δ	DESCRIPTION	BY	DATE
	REVISIONS		

ANDREWS & CLARK, INC.

STATE OF NEW HAMPSHIRE
DEPARTMENT OF TRANSPORTATION
BRIDGE DESIGN

TOWN FRANKLIN-NORTHFIELD BRIDGE NO. 184/127
FEDERAL PROJECT BRZ-163(1) STATE PROJECT T-4198
LOCATION CROSS MILL ROAD OVER WINNIPESAUKEE RIVER

GENERAL PLAN AND ELEVATION

	BY	DATE		BY	DATE	BRIDGE SHEET NO.
DESIGNED NHDOT			CHECKED MG		9/87	1 OF 18
DRAWN RRA		1-87	CHECKED			FILE NUMBER
TRACED NJC		9/87	CHECKED MG		9/87	5-5-3-3
QUANTITIES			CHECKED			

REVIEWED BY	PROJ. NO.	SHEET NO.	TOTAL SHEETS
	BRZ-163(1)	18	30

FED. ROAD DIV. NO.	STATE	PROJ.	FISCAL YEAR	SHEET NO.	TOTAL SHEETS
1	N.H.				

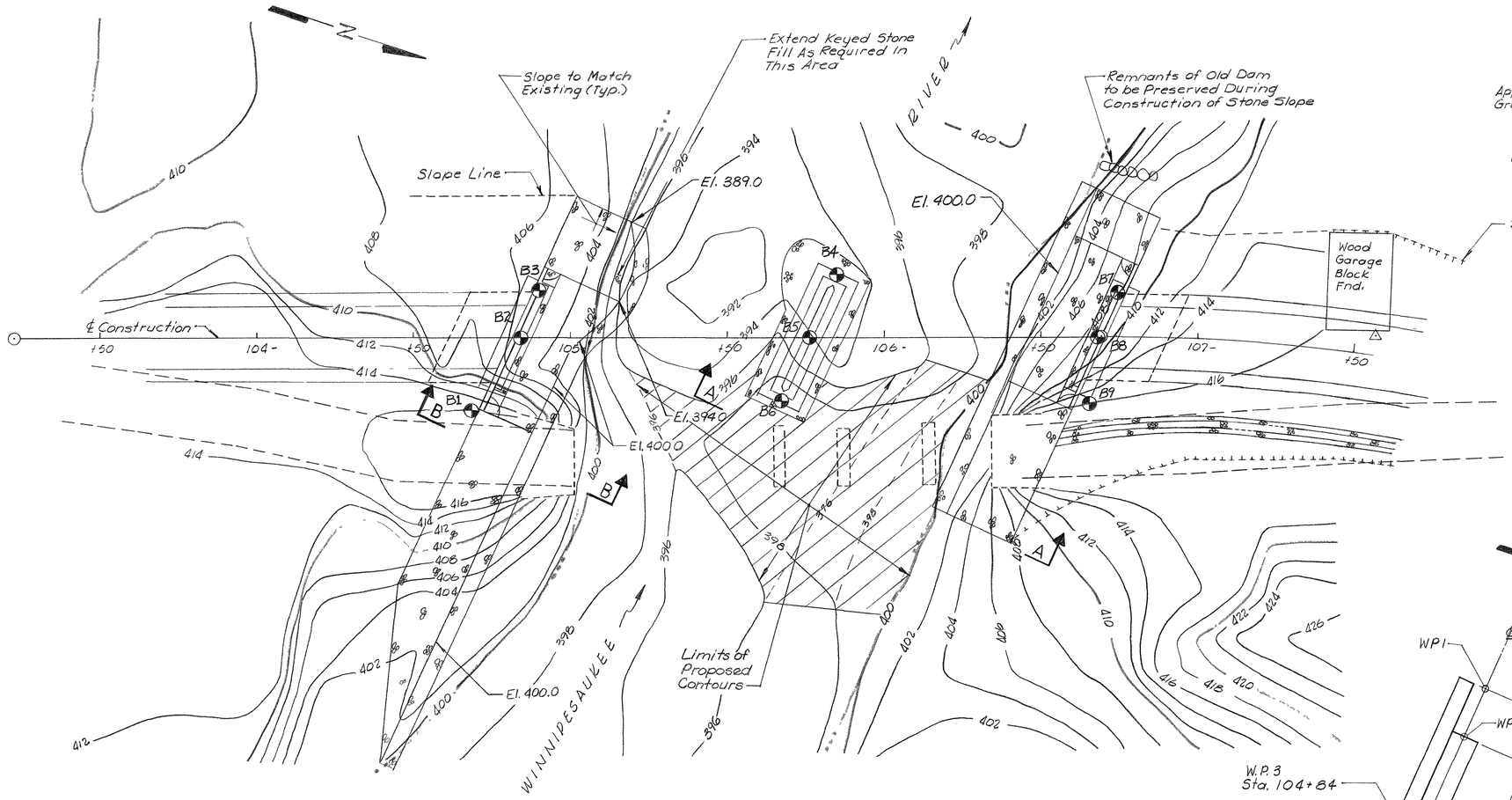

SITE PLAN
Scale = 1" = 20'-0"

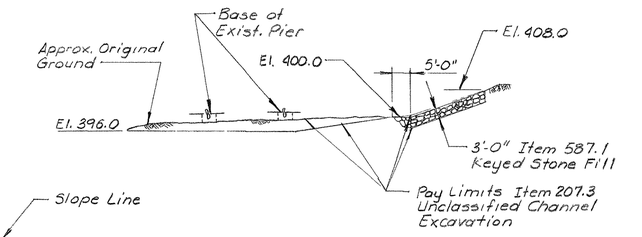

SECTION A-A
Scale: 1" = 20'-0"

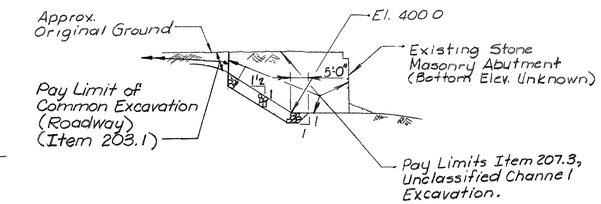

SECTION B-B
Scale: 1" = 20'-0"

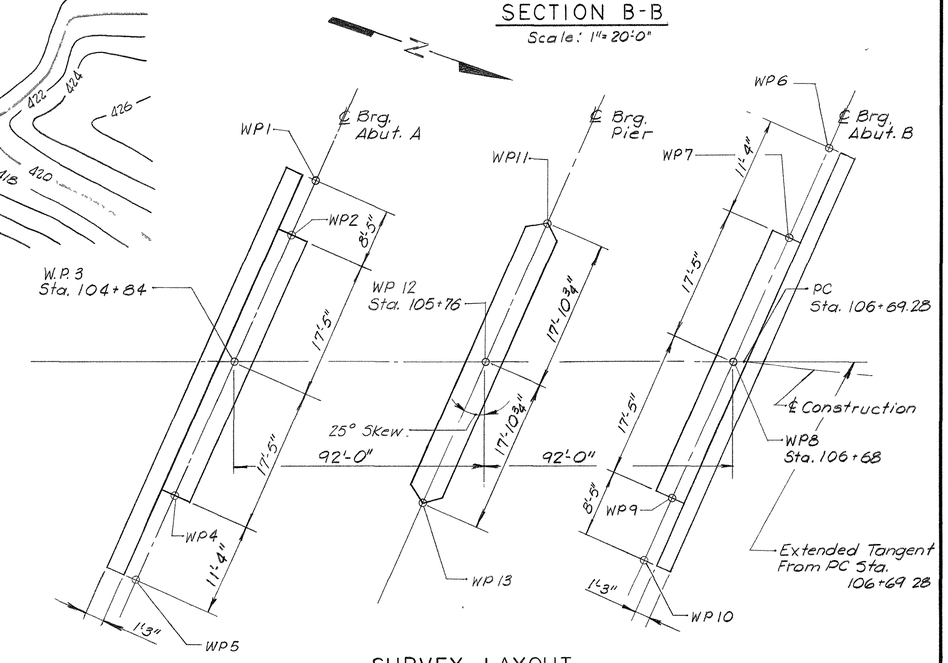

SURVEY LAYOUT
Not To Scale

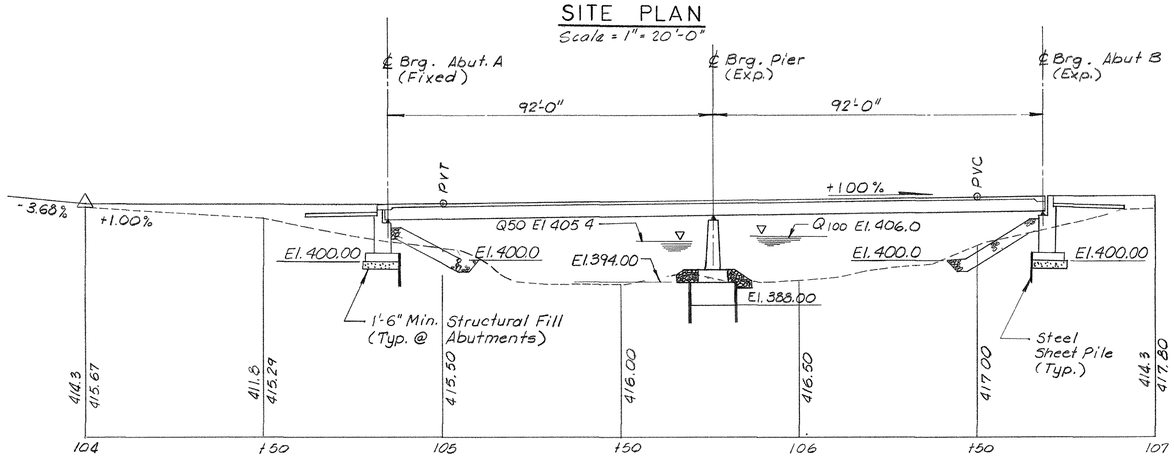

PROFILE
Scale: 1" = 20'-0"

STATE OF NEW HAMPSHIRE
DEPARTMENT OF PUBLIC WORKS AND HIGHWAYS
BRIDGE DESIGN DIVISION

TOWN FRANKLIN NORTHFIELD — BRIDGE, NO. 184/127
FEDERAL PROJECT BRZ-163(1) — STATE PROJECT T-4198
LOCATION CROSS MILL ROAD OVER WINNIPESAUKEE RIVER

STEVEN R. WHITE No. 3189 LICENSED PROFESSIONAL ENGINEER STATE OF NEW HAMPSHIRE

Δ	DESCRIPTION	BY	DATE

REVISIONS

ANDREWS & CLARK, INC.

SITE PLAN AND PROFILE

	BY	DATE		BY	DATE
DESIGNED NHDOT			CHECKED MG		9/87
DRAWN NHDOT			CHECKED		
TRACED NJC		9/87	CHECKED MG		9/87
QUANTITIES			CHECKED		

BRIDGE SHEET NO. 2 OF 18
FILE NUMBER 5-5-3-3

REVIEWED BY	PROJ. NO.	SHEET NO.	TOTAL SHEETS
	BRZ-163(1)	14	30

BRUNING 53232

FED. ROAD DIV. NO.	STATE	PROJ.	FISCAL YEAR	SHEET NO.	TOTAL SHEETS
1	N.H.				

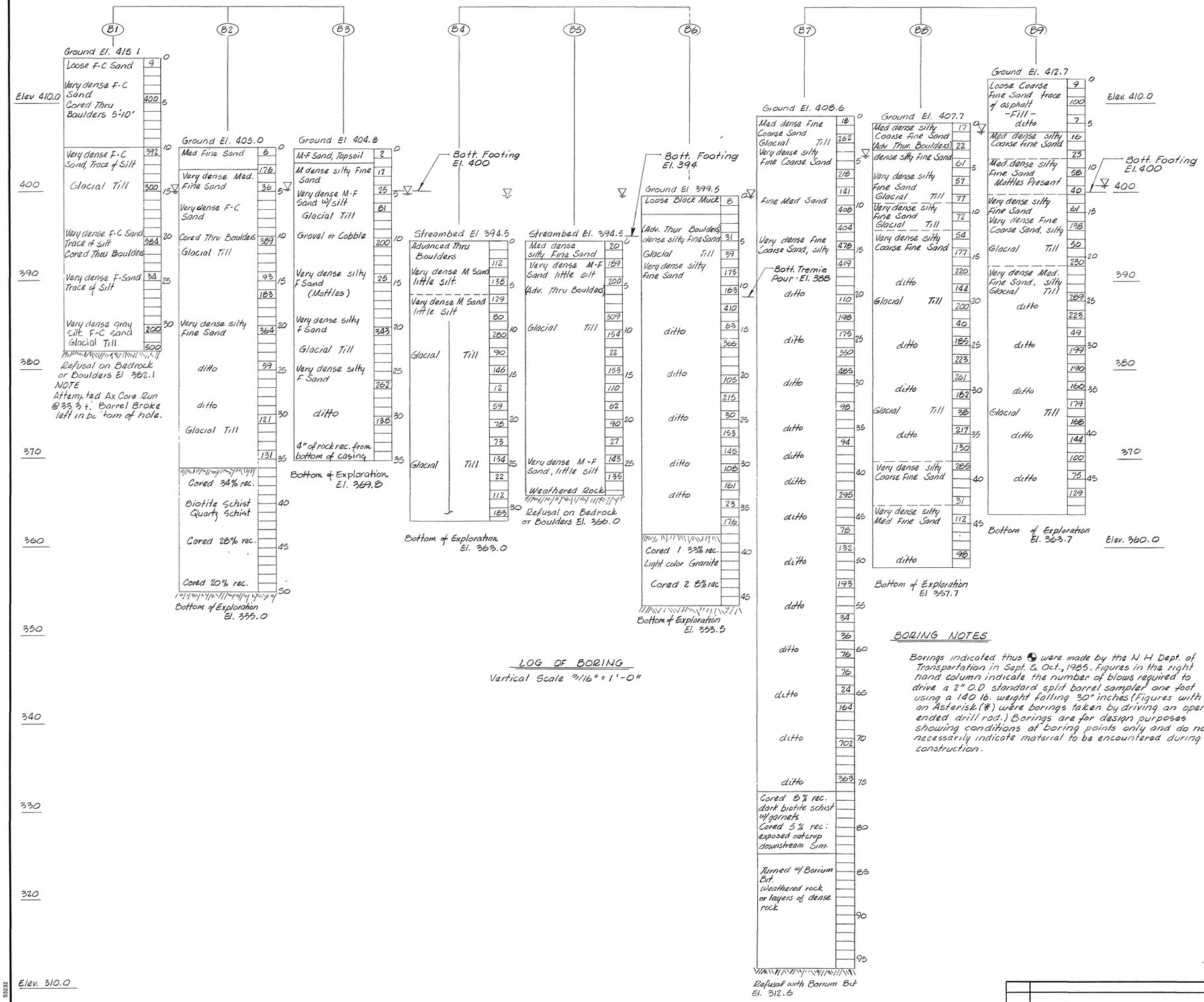

LOG OF BORING

Vertical Scale 3/16" = 1'-0"

BORING NOTES

Borings indicated thus ◐ were made by the N.H. Dept. of Transportation in Sept. & Oct., 1985. Figures in the right hand column indicate the number of blows required to drive a 2" O.D. standard split barrel sampler one foot using a 140 lb. weight falling 30" inches (Figures with an Astarisk (*) were borings taken by driving an open ended drill rod.) Borings are for design purposes showing conditions at boring points only and do not necessarily indicate material to be encountered during construction.

STATE OF NEW HAMPSHIRE
DEPARTMENT OF PUBLIC WORKS AND HIGHWAYS
BRIDGE DESIGN DIVISION

TOWN FRANKLIN-NORTHFIELD BRIDGE NO. 184/127
FEDERAL PROJECT BRZ-163(1) STATE PROJECT T-4198
LOCATION CROSS MILL ROAD OVER WINNIPESAUKEE RIVER

△	DESCRIPTION	BY	DATE
	REVISIONS		

ANDREWS & CLARK, INC.

BORINGS

	BY	DATE		BY	DATE
DESIGNED NHDOT			CHECKED NHDOT		
DRAWN NHDOT			CHECKED NHDOT		
TRACED			CHECKED		
QUANTITIES			CHECKED		

BRIDGE SHEET NO. 3 OF 18
FILE NUMBER 5-5-3-3

REVIEWED BY	PROJ. NO.	SHEET NO.	TOTAL SHEETS
	BRZ-163(1)	15	30

53232 BRUNING

FED. ROAD DIV. NO.	STATE	PROJ.	FISCAL YEAR	SHEET NO.	TOTAL SHEETS
1	N.H.				

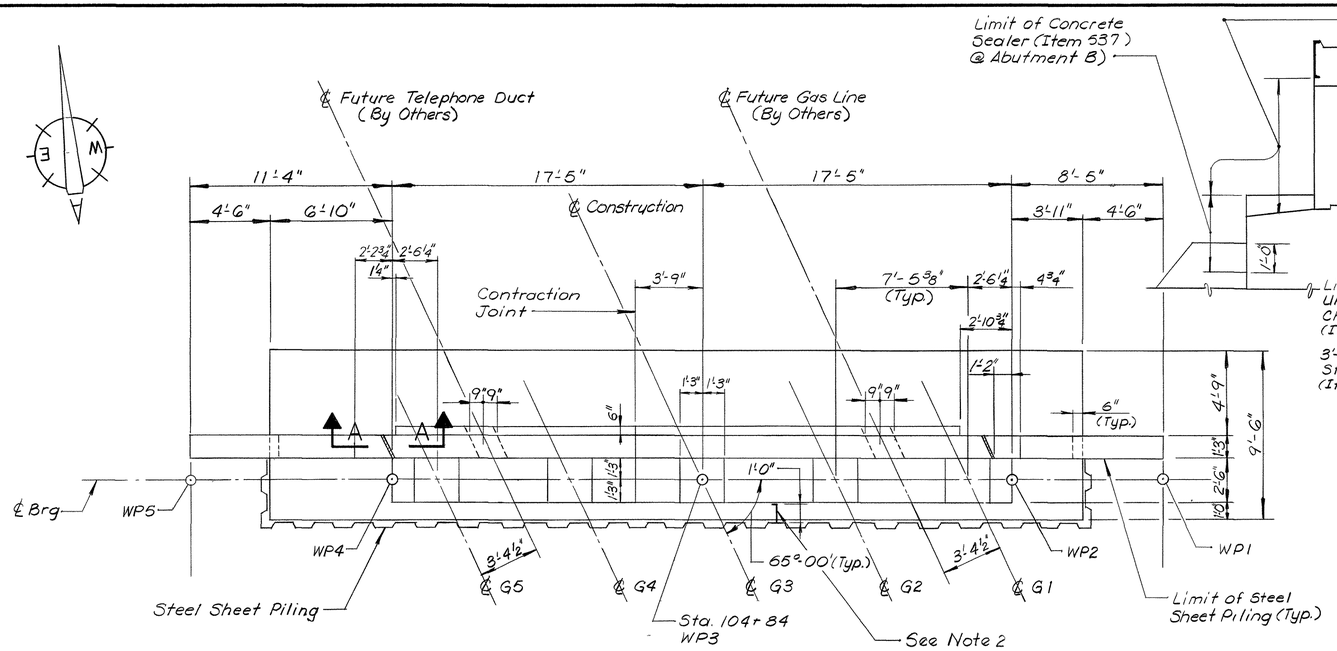

PLAN

Scale: 4" = 1'-0"

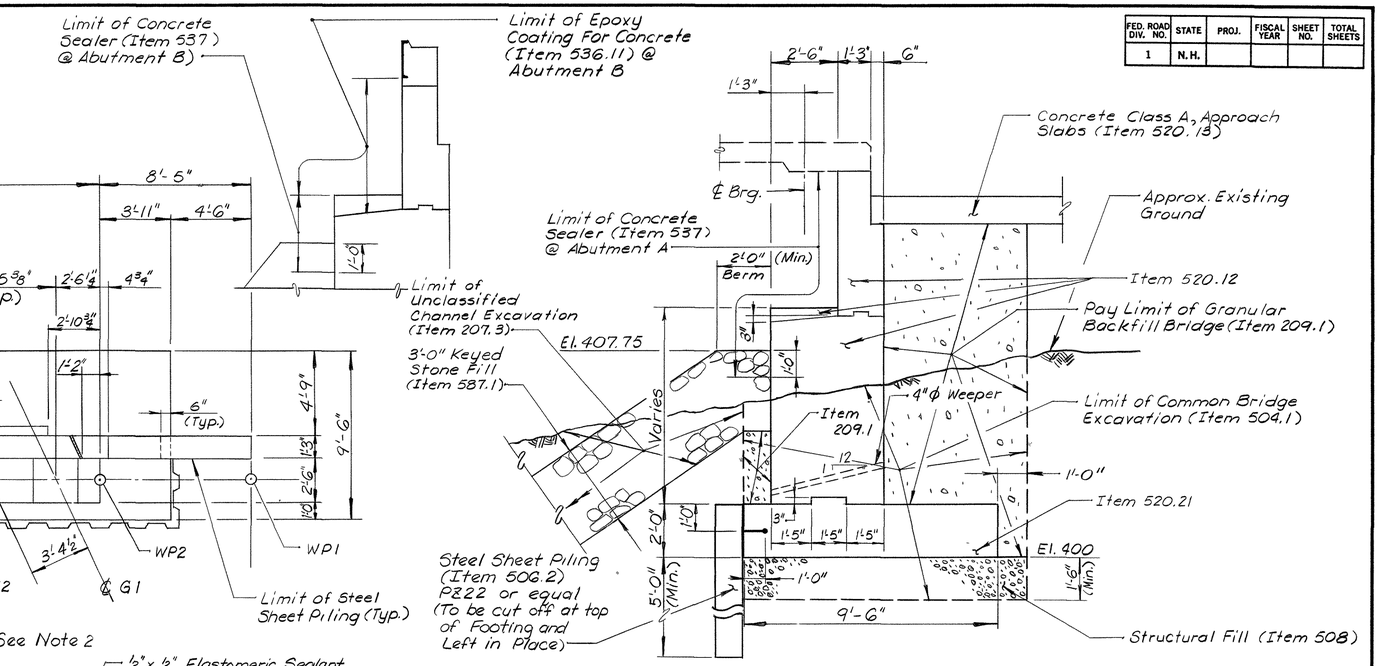

ABUTMENT SECTION

Scale: ⅜" = 1'-0"

(Abutment A Shown, Abutment B Similar)

NOTES:

1. STEEL SHEET PILING SHALL BE DRIVEN AS DIRECTED BY THE ENGINEER. IN SOME LOCATIONS PLACEMENT OF THE SHEETING MAY REQUIRE EXCAVATION OF COBBLES AND BOULDERS IN THE AREA BELOW THE FOOTINGS AND ON THE RIVER - SIDE OF THE SHEETING. DURING THE EXCAVATION, THE CONTRACTOR SHALL DISTURB THESE AREAS AS LITTLE AS POSSIBLE. AREAS ON BOTH SIDES OF THE STEEL SHEETING SHALL BE EXCAVATED, BACKFILLED AND COMPACTED SIMULTANEOUSLY TO AVOID DISPLACEMENT OF THE STEEL SHEETING.
2. THE CONTRACTOR SHALL ATTACH THE STEEL SHEETING TO THE FOOTING USING A ½"Ø x 18" LONG HOOKED GALVANIZED A307 ANCHOR ROD AT 4'-0" O.C. BOLTED TO THE SHEETING (COST TO BE INCLUDED IN ITEM 506.2).
3. ALL WORK AND MATERIALS NECESSARY FOR WATER CONTROL IN THE VICINITY OF THE AREA TO BE SHEETED SHALL BE PAID UNDER ITEM 503, COFFERDAMS (SEE PROPOSAL).

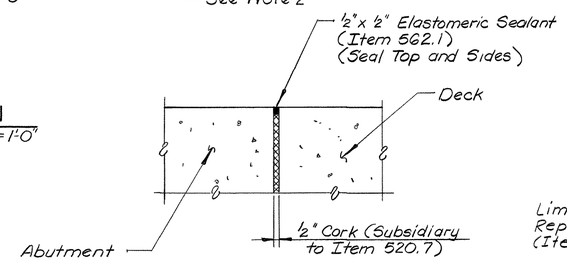

SECTION A-A

Not to Scale

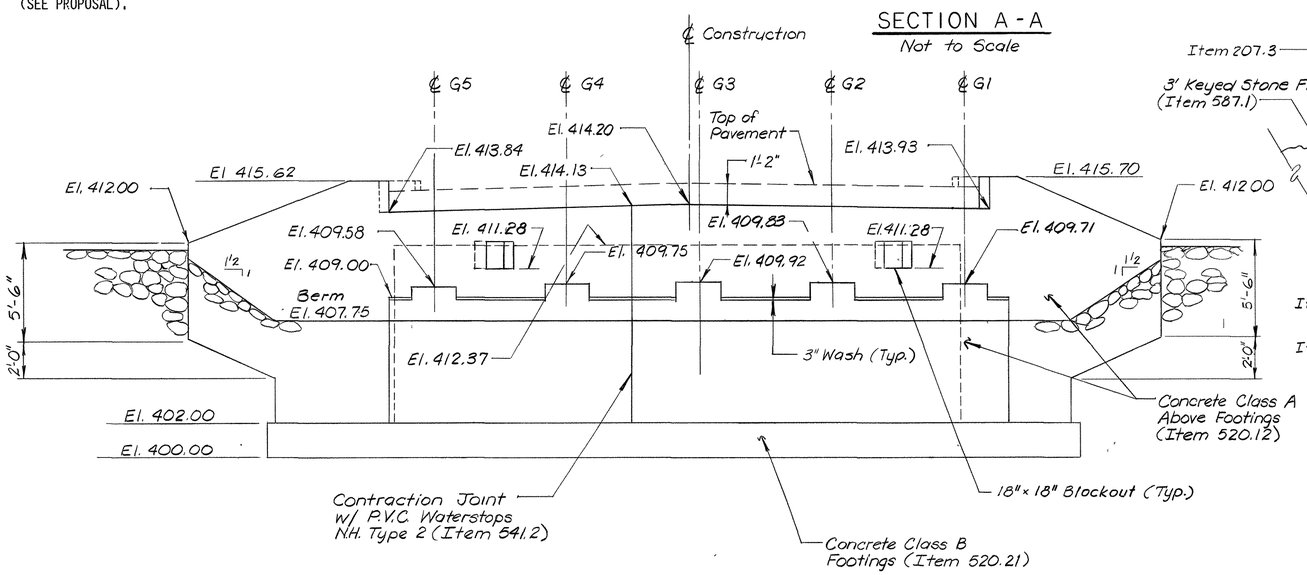

ELEVATION

Scale: 4" = 1'-0"

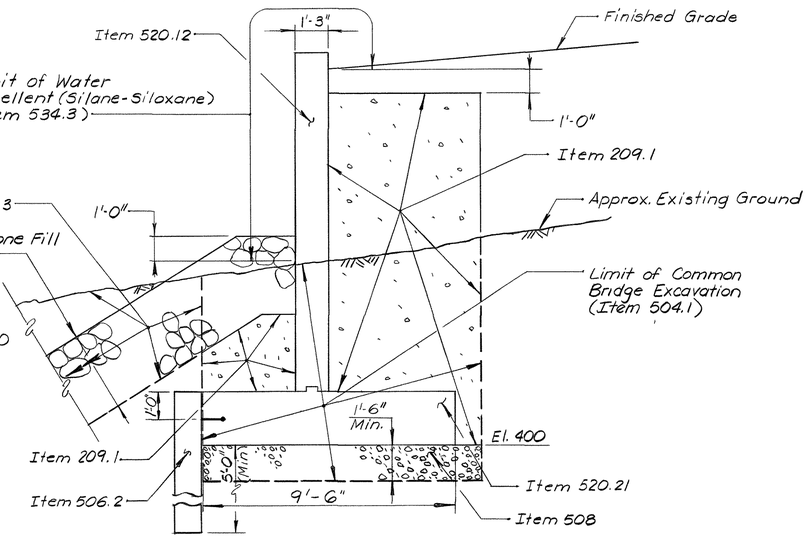

TYPICAL WINGWALL SECTION

Scale: ⅜" = 1'-0"

STATE OF NEW HAMPSHIRE
STEVEN R. WHITE
No. 3189
LICENSED
PROFESSIONAL ENGINEER

STATE OF NEW HAMPSHIRE
DEPARTMENT OF TRANSPORTATION
BUREAU OF BRIDGE DESIGN

TOWN FRANKLIN-NORTHFIELD — BRIDGE NO. 184/127
FEDERAL PROJECT BRZ-163(1) — STATE PROJECT T-4198
LOCATION CROSS MILL ROAD OVER WINNIPESAUKEE RIVER

Δ	DESCRIPTION	BY	DATE

REVISIONS

ANDREWS & CLARK, INC.

ABUTMENT A & WINGWALLS (MASONRY)

	BY	DATE		BY	DATE
DESIGNED	MG	9/87	CHECKED	JPH	9/87
DRAWN	BJAN	9/87	CHECKED	MG	9/87
TRACED			CHECKED		
QUANTITIES			CHECKED		

REVIEWED BY

BRIDGE SHEET NO.	FILE NUMBER
4 OF 18	5-5-3-3

PROJ. NO.	SHEET NO.	TOTAL SHEETS
BRZ-163 (1)	16	30

MAKEPEACE 130282

FED. ROAD DIV. NO.	STATE	PROJ.	FISCAL YEAR	SHEET NO.	TOTAL SHEETS
1	N.H.				

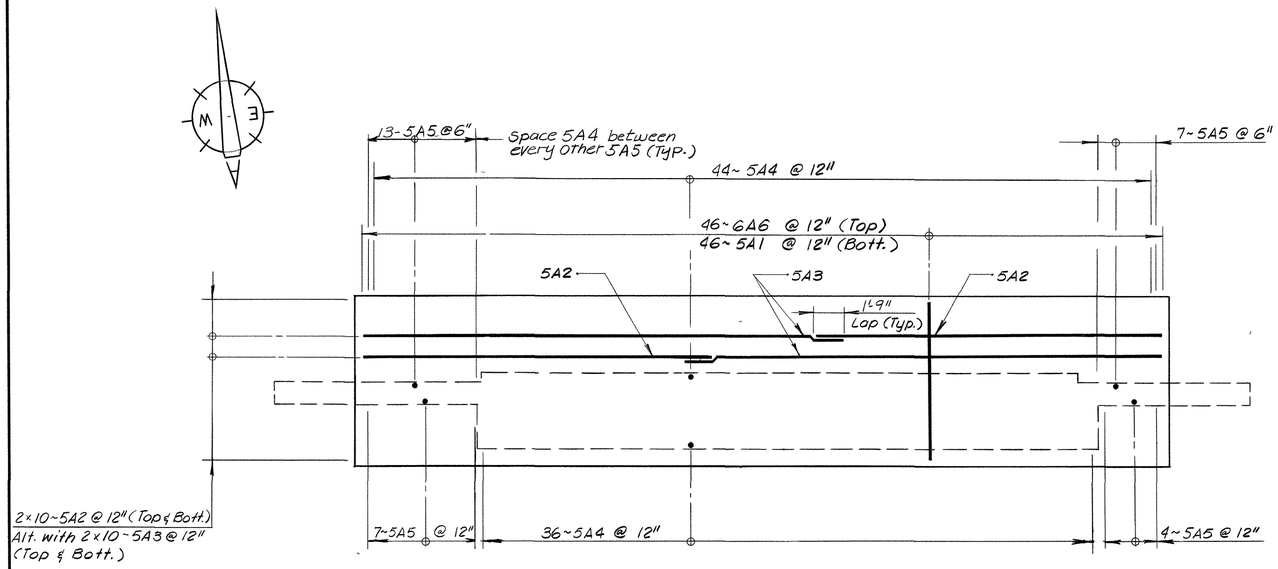

PLAN

Scale: 1/4" = 1'-0"

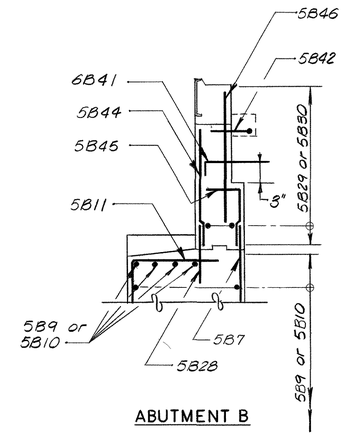

ABUTMENT B

DETAIL A

(Not to Scale)

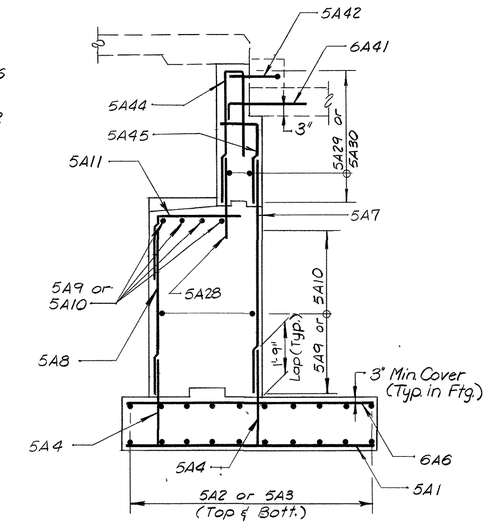

ABUTMENT SECTION

Scale: 3/8" = 1'-0"

(Abutment A Shown; Abutment B Similar, Except as Shown @ Detail A)

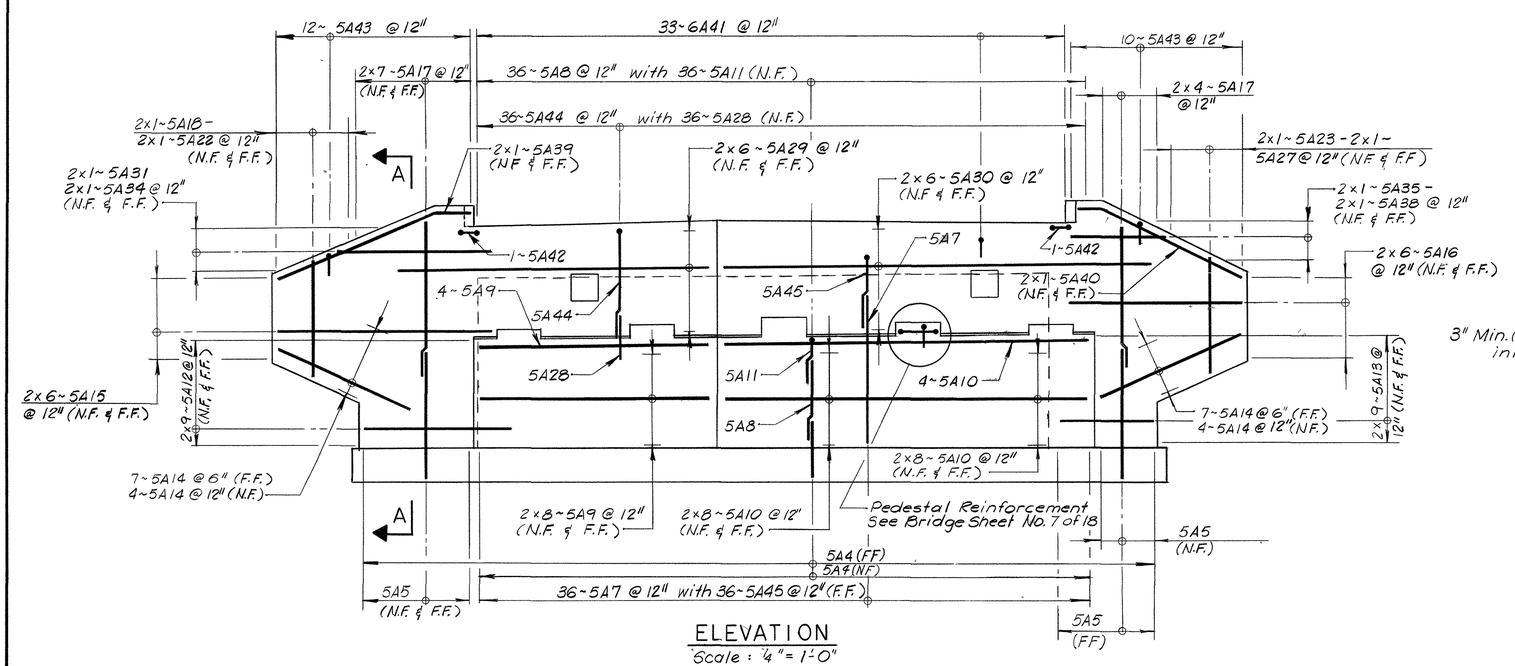

ELEVATION

Scale: 1/4" = 1'-0"

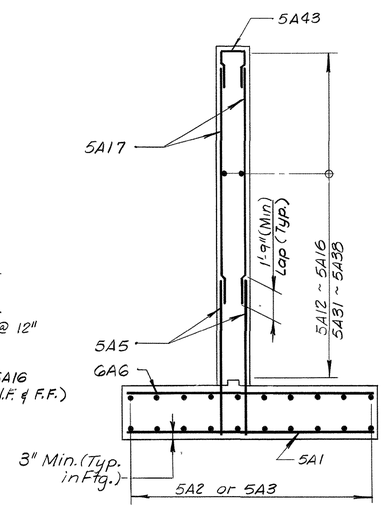

WINGWALL SECTION A-A

Scale: 3/8" = 1'-0"

Abutment A Shown; Abutment B Similar)

ABUTMENT QUANTITIES

ITEM NO.	DESCRIPTION	ABUT. A	ABUT. B	UNIT
207.3	UNCLASSIFIED CHANNEL EXCAVATION	1750	1000	C.Y.
209.1	GRANULAR BACKFILL (BRIDGE)	150	175	C.Y.
504.1	COMMON BRIDGE EXCAVATION	170	230	C.Y.
504.2	ROCK BRIDGE EXCAVATION	10	10	C.Y.
506.2	STEEL SHEET PILING	8100	8100	LB.
508	STRUCTURAL FILL	30	30	C.Y.
520.12	CONCRETE CLASS A, ABOVE FOOTINGS	(57.8CY)	(69.6CY)1	UNIT
520.21	CONCRETE CLASS B, FOOTINGS	32.1	32.1	C.Y.
534.3	WATER REPELLENT (SILANE-SILOXANE)	2	2	GAL.
536.11	EPOXY COATING FOR CONCRETE	----	275	S.F.
537	CONCRETE SEALER	5	2	GAL.
538.2	BARRIER MEMBRANE, VERTICAL SURFACES	22	25	S.Y.
541.2	PVC WATERSTOPS, NH TYPE 2	12	14	L.F.
541.5	PVC WATERSTOPS, NH TYPE 5	34	----	L.F.
544	REINFORCING STEEL	7072	7481	LB.
562.1	ELASTOMERIC SEALANT	30	----	CU. IN.
587.1	KEYED STONE FILL	550	450	C.Y.

STATE OF NEW HAMPSHIRE
DEPARTMENT OF TRANSPORTATION
BUREAU OF BRIDGE DESIGN

TOWN FRANKLIN-NORTHFIELD BRIDGE, NO. 184/127
FEDERAL PROJECT BRZ-163(1) STATE PROJECT T-4198
LOCATION CROSS MILL ROAD OVER WINNIPESAUKEE RIVER

STATE OF NEW HAMPSHIRE — STEVEN M. WHITE No. 3189 LICENSED — PROFESSIONAL ENGINEER

Δ	DESCRIPTION	BY	DATE

REVISIONS

ANDREWS & CLARK, INC.

ABUT. A & WINGWALLS (REINFORCEMENT)

	BY	DATE		BY	DATE	
DESIGNED	MG	9/87	CHECKED	JPH	9/87	BRIDGE SHEET NO. 5 OF 18
DRAWN	NJC	9/87	CHECKED	MG	9/87	FILE NUMBER 5-5-3-3
TRACED			CHECKED			
QUANTITIES			CHECKED			

REVIEWED BY	PROJ. NO.	SHEET NO.	TOTAL SHEETS
	BRZ-163(1)	17	30

MAKEPEACE 130282

FED. ROAD DIV. NO.	STATE	PROJ.	FISCAL YEAR	SHEET NO.	TOTAL SHEETS
1	N.H.				

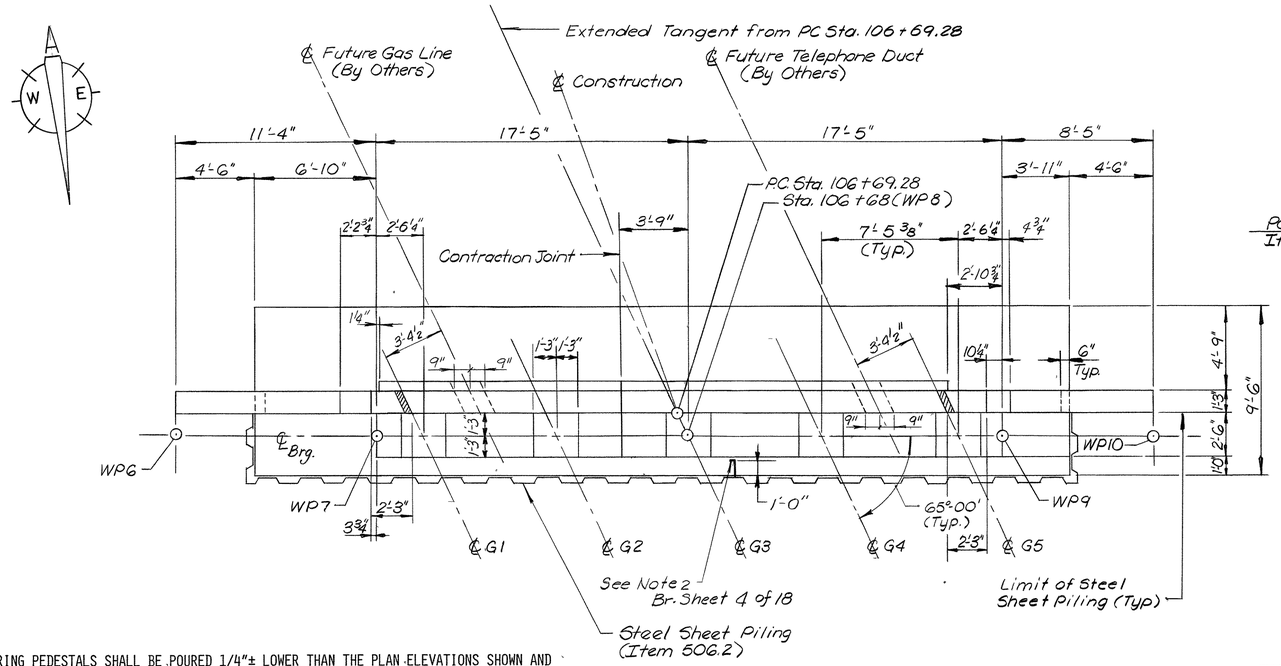

PLAN
Scale: 1/4" = 1'-0"

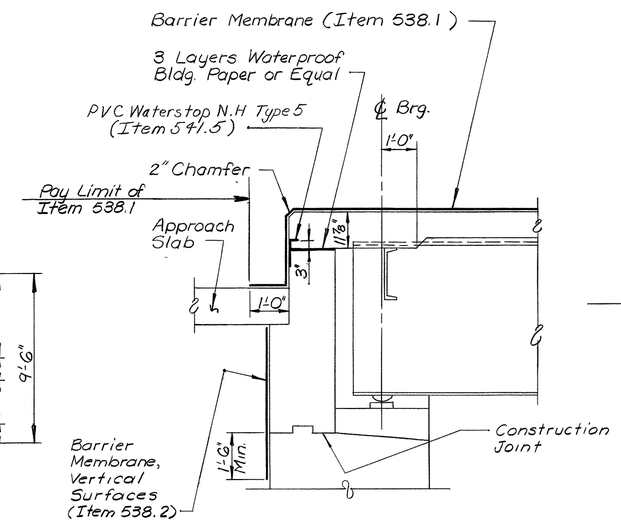

END DETAIL (Fixed Bearing)
Scale: 1/2" = 1'-0"

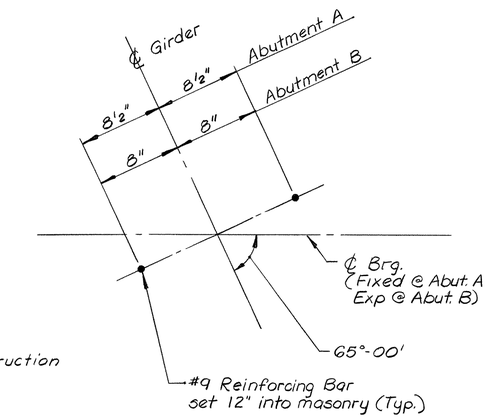

ANCHOR BOLT LAYOUT
Not to Scale

NOTES:

1. THE BEARING PEDESTALS SHALL BE POURED 1/4"± LOWER THAN THE PLAN ELEVATIONS SHOWN AND GROUND LEVEL. ELEVATIONS SHALL THEN BE TAKEN AT EACH PEDESTAL AND SHIMS SHALL BE ORDERED EQUAL TO THE DIFFERENCE BETWEEN THE PLAN ELEVATIONS AND THE ACTUAL ELEVATIONS. COST OF THE SHIM PLATES TO BE INCLUDED UNDER ITEM 550.2, BRIDGE SHOES. AT THE CONTRACTOR'S OPTION, THE BEARING PEDESTALS MAY BE POURED SLIGHTLY HIGH AND THE ENTIRE PEDESTAL SURFACE MACHINE DRESSED TO THE EXACT ELEVATION.
2. THE CONCRETE IN THE BACKWALL AND IN THE BRUSH CURBS ABOVE THE CONSTRUCTION JOINTS ON THE ABUTMENT AND WINGWALLS SHALL BE OF THE SAME MIX AS THE BRIDGE DECK CONCRETE AND SHALL BE PAID FOR UNDER ITEM 520.12.
3. ALL EXPOSED EDGES OF CONCRETE SHALL BE CHAMFERED 3/4" EXCEPT AS NOTED.

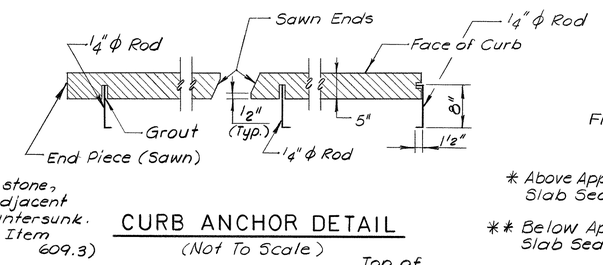

CURB ANCHOR DETAIL
(Not To Scale)

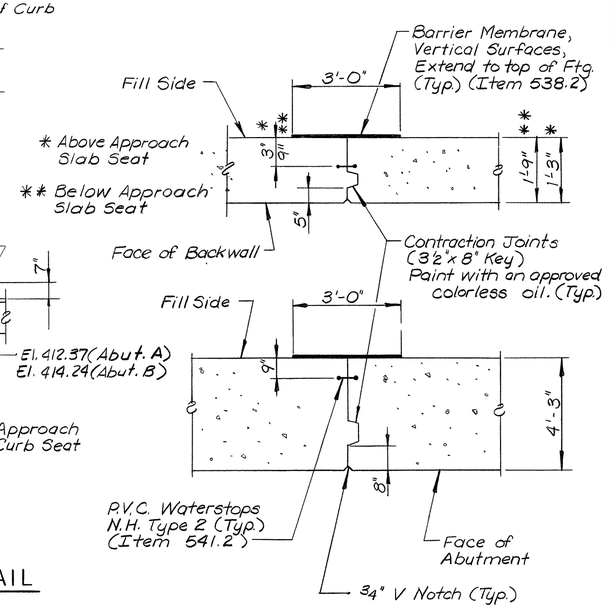

CONTRACTION JOINT AT ABUTMENTS
(Not to Scale)

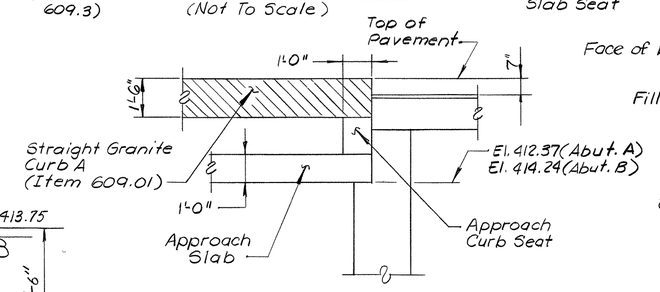

APPROACH CURB DETAIL
Scale: 3/8" = 1'-0"

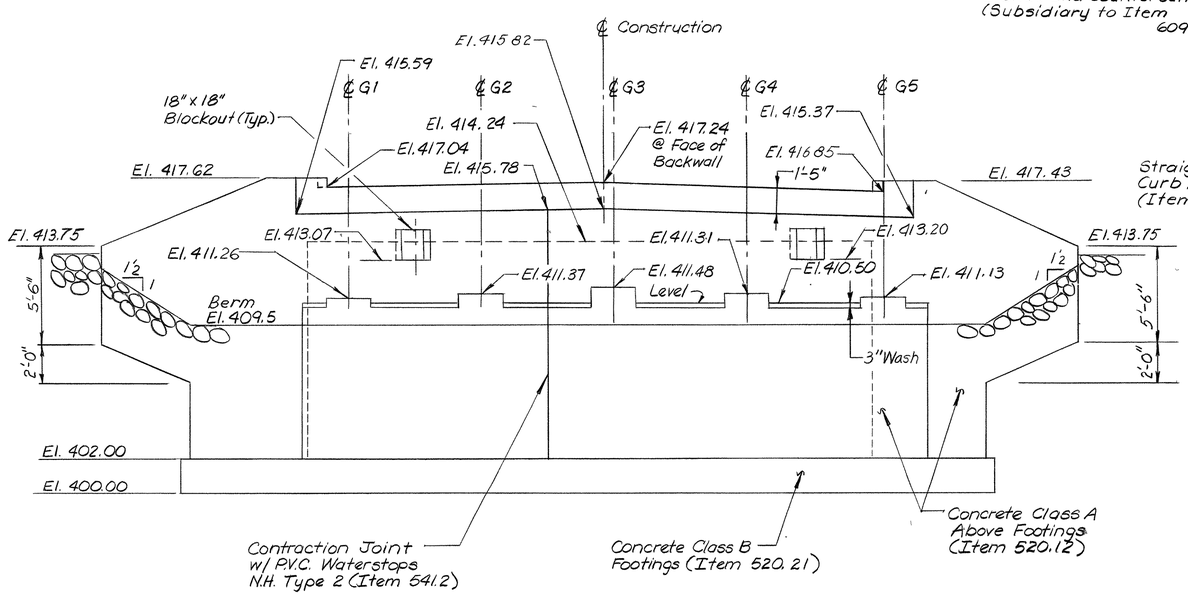

ELEVATION
Scale: 1/4" = 1'-0"

STATE OF NEW HAMPSHIRE
STEVEN R. WHITE No. 3189 LICENSED PROFESSIONAL ENGINEER

STATE OF NEW HAMPSHIRE
DEPARTMENT OF TRANSPORTATION
BUREAU OF BRIDGE DESIGN

TOWN FRANKLIN-NORTHFIELD BRIDGE NO. 184/127
FEDERAL PROJECT BRZ-163(1) STATE PROJECT T-4198
LOCATION CROSS MILL ROAD OVER WINNIPESAUKEE RIVER

Δ	DESCRIPTION	BY	DATE

REVISIONS

ANDREWS & CLARK, INC.

ABUTMENT B & WINGWALLS (MASONRY)

	BY	DATE		BY	DATE
DESIGNED	MG	9/87	CHECKED	JPH	9/87
DRAWN	BJAN	9/87	CHECKED	MG	9/87
TRACED			CHECKED		
QUANTITIES			CHECKED		

REVIEWED BY

BRIDGE SHEET NO.	FILE NUMBER
6 OF 18	5-5-3-3

PROJ. NO.	SHEET NO.	TOTAL SHEETS
BRZ-163(1)	18	30

MAKEPEACE 130282

FED. ROAD DIV. NO.	STATE	PROJ.	FISCAL YEAR	SHEET NO.	TOTAL SHEETS
1	N.H.				

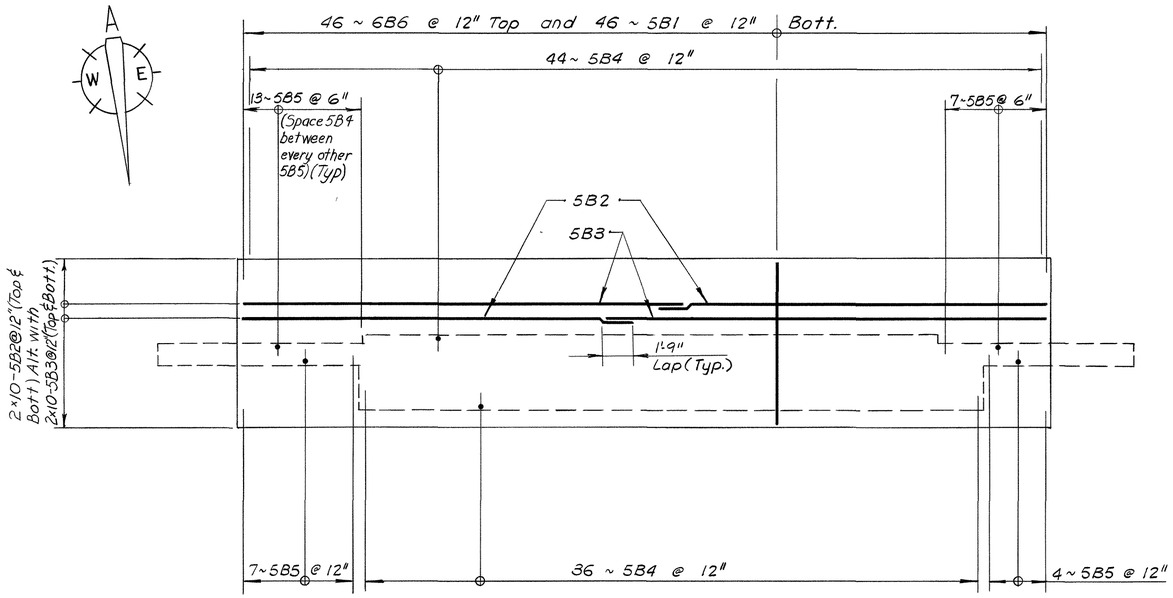

PLAN
Scale: 4" = 1'-0"

APPROACH SLAB QUANTITIES	
520.13	42.8 CY
544	7694.0 LB

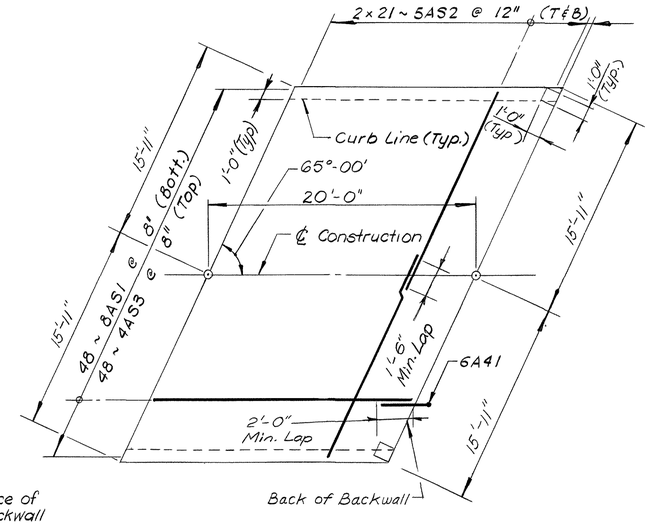

APPROACH SLAB 'A'
Scale 3/16" = 1'-0"

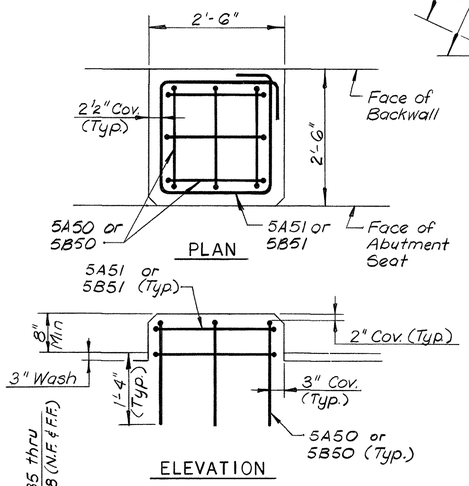

PEDESTAL REINFORCEMENT
Scale: 3/4" = 1'-0"

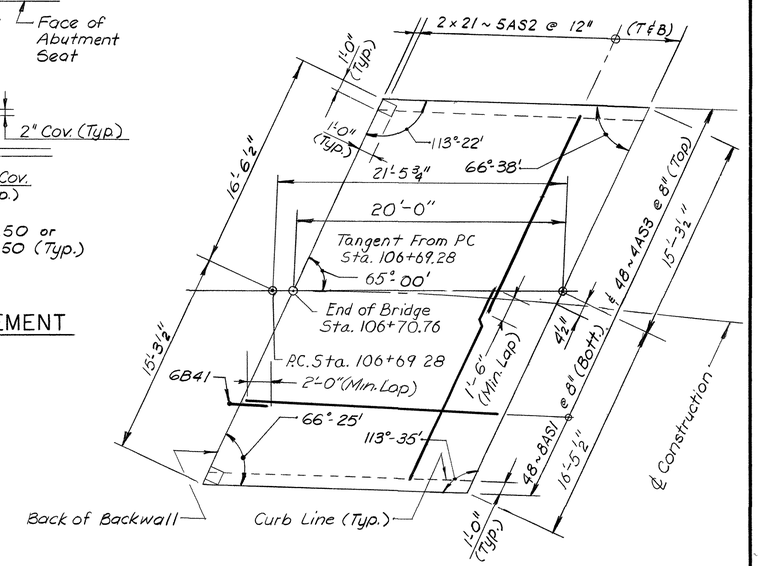

APPROACH SLAB 'B'
Scale: 3/16" = 1'-0"

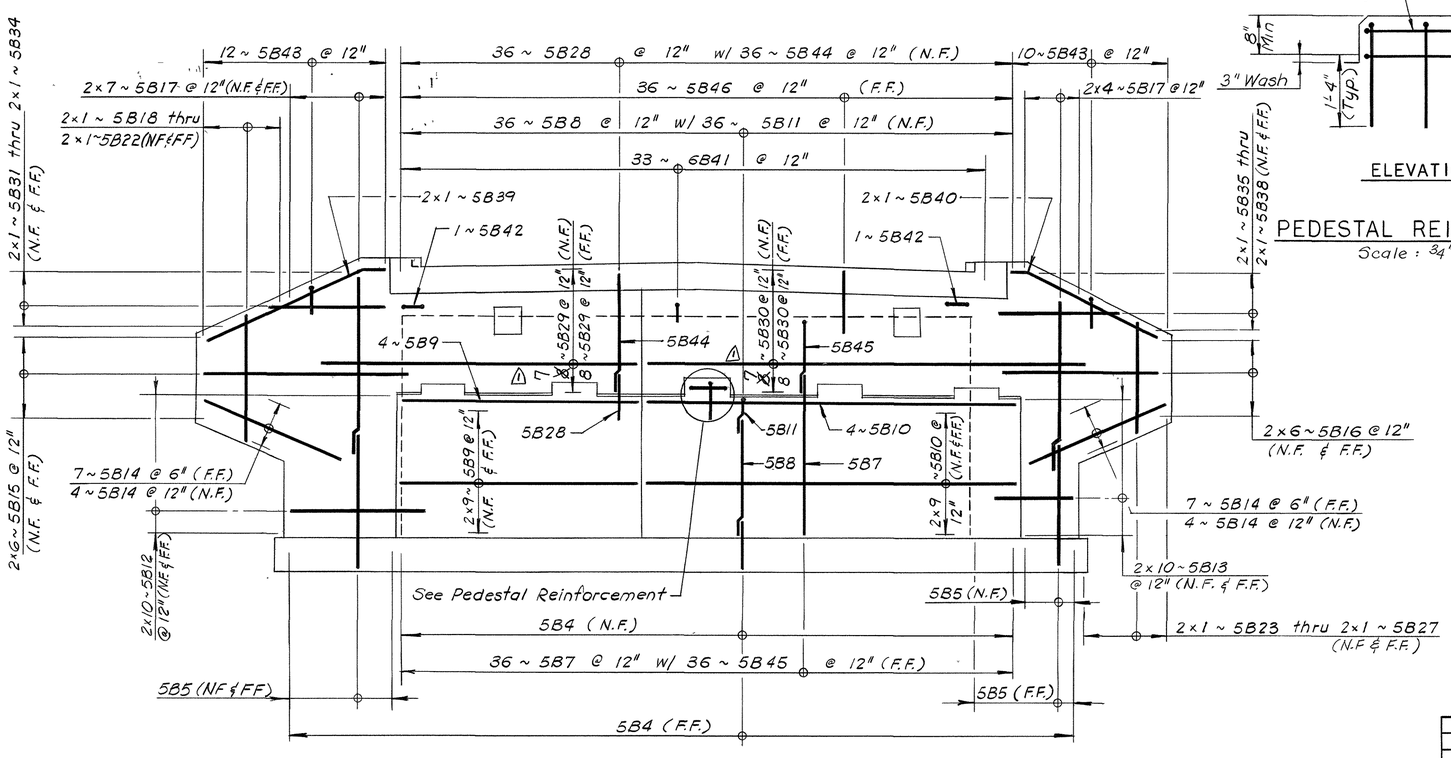

ELEVATION
Scale: 1/4" = 1'-0"

STATE OF NEW HAMPSHIRE
DEPARTMENT OF TRANSPORTATION
BUREAU OF BRIDGE DESIGN

TOWN FRANKLIN-NORTHFIELD — BRIDGE NO. 184/127
FEDERAL PROJECT BRZ-163(1) — STATE PROJECT T-4198
LOCATION CROSS MILL ROAD OVER WINNIPESAUKEE RIVER

1	No. of Rebars in Front of Backwall	JPK 12/87
2		
3		
4		
	DESCRIPTION	BY DATE

REVISIONS

ANDREWS & CLARK, INC.

STATE OF NEW HAMPSHIRE — STEVEN R. WHITE No. 3189 — LICENSED PROFESSIONAL ENGINEER

ABUT. B & WINGWALLS (REINFORCEMENT)

	BY	DATE		BY	DATE
DESIGNED MG		9/87	CHECKED JPH		9/87
DRAWN RWK		9/87	CHECKED MG		9/87
TRACED			CHECKED		
QUANTITIES			CHECKED		

REVIEWED BY

BRIDGE SHEET NO.	FILE NUMBER
7 OF 18	5-5-3-3

PROJ. NO.	SHEET NO.	TOTAL SHEETS
BRZ-163(1)	19	30

MAKEPEACE 130292

FED. ROAD DIV. NO.	STATE	PROJ.	FISCAL YEAR	SHEET NO.	TOTAL SHEETS
1	N.H.				

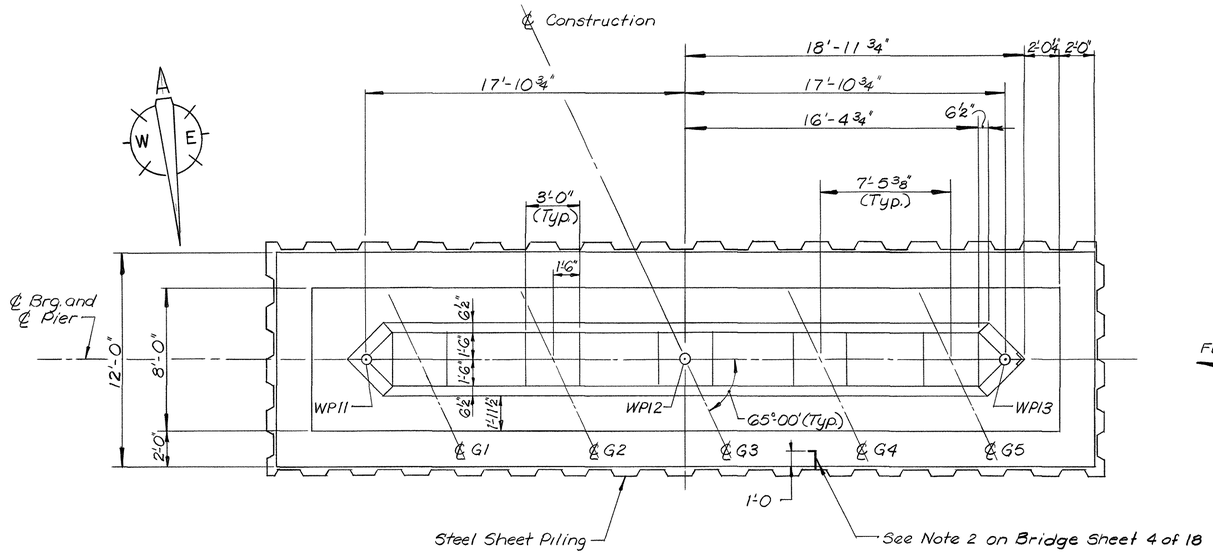

PLAN
Scale: 1/4" = 1'-0"

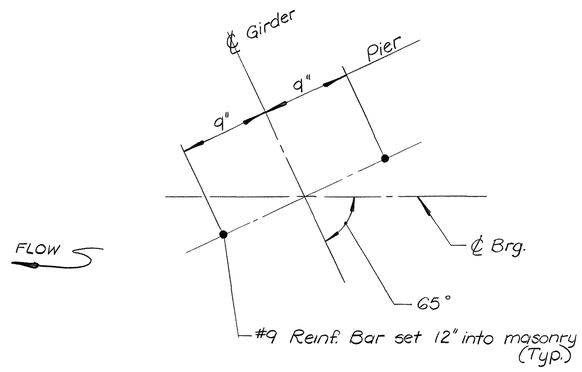

ANCHOR BOLT LAYOUT
Scale: 1 1/2" = 1'-0"

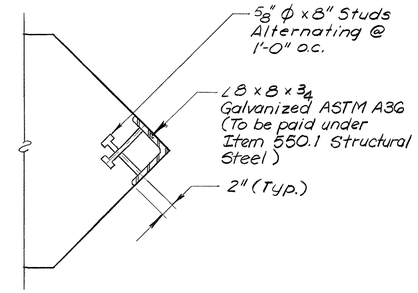

SECTION B-B
Scale: 1" = 1'-0"

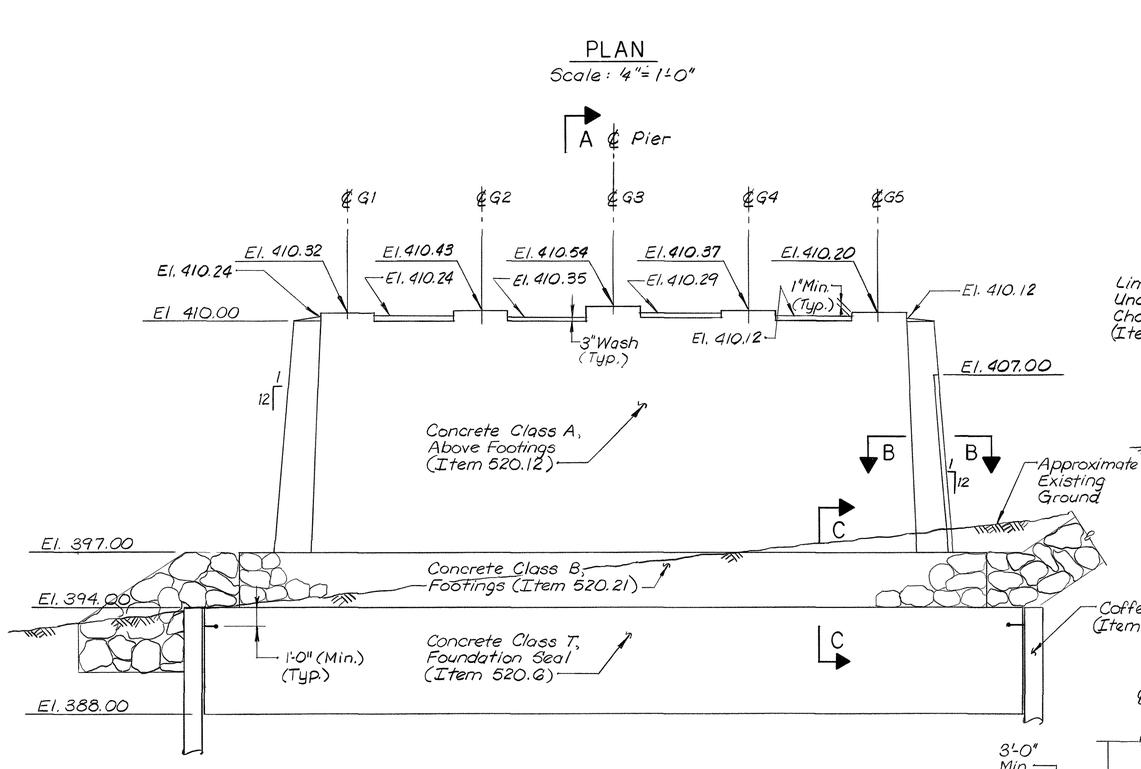

ELEVATION
Scale: 1/4" = 1'-0"
(LOOKING NORTH)

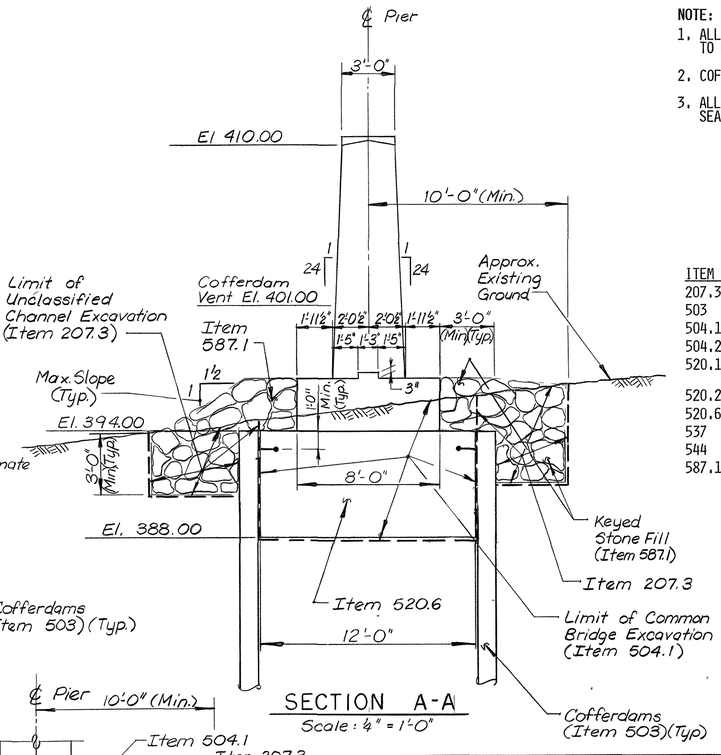

SECTION A-A
Scale: 1/4" = 1'-0"

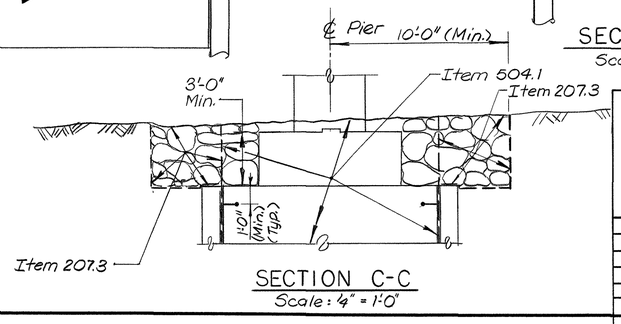

SECTION C-C
Scale: 1/4" = 1'-0"

NOTE:
1. ALL COFFERDAM SHEETING AT PIER SHALL HAVE APPROVED PILE POINTS, TO BE PAID UNDER ITEM 503, COFFERDAM.
2. COFFERDAM PLAN TO BE SUBMITTED TO THE ENGINEER FOR APPROVAL.
3. ALL EXPOSED CONCRETE SURFACE SHALL BE TREATED WITH CONCRETE SEALER (ITEM 537).

PIER QUANTITIES

ITEM NO.	DESCRIPTION	PIER	UNIT
207.3	UNCLASSIFIED CHANNEL EXCAVATION	100	C.Y.
503	COFFERDAMS	1	UNIT
504.1	COMMON BRIDGE EXCAVATION	150	C.Y.
504.2	ROCK BRIDGE EXCAVATION	10	C.Y.
520.12	CONCRETE CLASS A, ABOVE FOOTINGS (60.9 CY)	1	UNIT
520.21	CONCRETE CLASS B, FOOTINGS	37.3	C.Y.
520.6	CONCRETE CLASS T, FOUNDATION SEAL	122.7	C.Y.
537	CONCRETE SEALER	22	GAL.
544	REINFORCING STEEL	5932	LB.
587.1	KEYED STONE FILL	100	C.Y.

STATE OF NEW HAMPSHIRE
STEVEN R. WHITE No. 3189 LICENSED PROFESSIONAL ENGINEER

Δ	DESCRIPTION	BY	DATE

REVISIONS

ANDREWS & CLARK, INC.

STATE OF NEW HAMPSHIRE
DEPARTMENT OF TRANSPORTATION
BUREAU OF BRIDGE DESIGN

TOWN FRANKLIN-NORTHFIELD BRIDGE NO. 184/127
FEDERAL PROJECT BRZ-163(1) STATE PROJECT T-4198
LOCATION CROSS MILL ROAD OVER WINNIPESAUKEE RIVER

PIER (MASONRY)

	BY	DATE		BY	DATE	BRIDGE SHEET NO.
DESIGNED DMN		9/87	CHECKED CWF		9/87	8 OF 18
DRAWN BJAN		9/87	CHECKED DMN / MG		9/87	FILE NUMBER
TRACED			CHECKED			5-5-3-3
QUANTITIES			CHECKED			

REVIEWED BY	PROJ. NO.	SHEET NO.	TOTAL SHEETS
	BRZ-163(1)	20	30

MAKEPEACE 130282

FED. ROAD DIV. NO.	STATE	PROJ.	FISCAL YEAR	SHEET NO.	TOTAL SHEETS
1	N.H.				

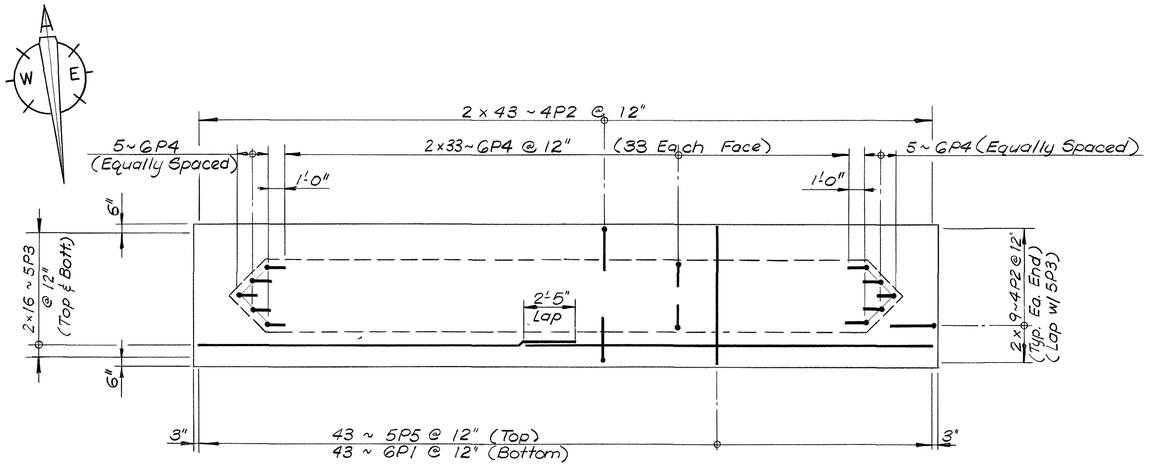

PLAN
Scale: 1/4" = 1'-0"

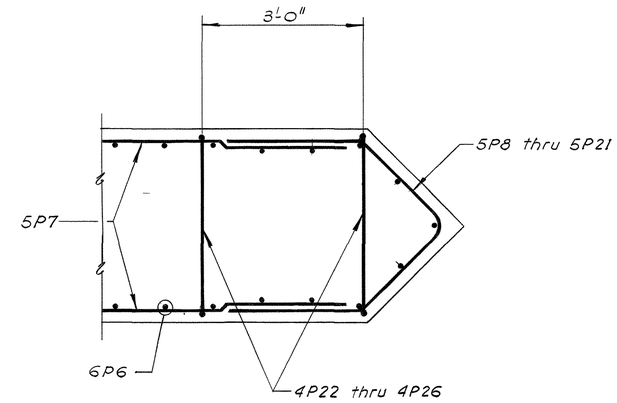

SECTION A-A
Scale: 3/4" = 1'-0"

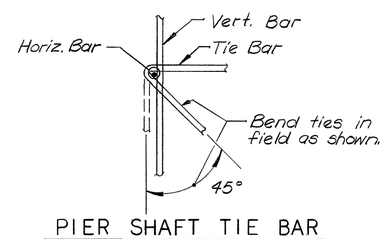

PIER SHAFT TIE BAR DETAIL
N.T.S.

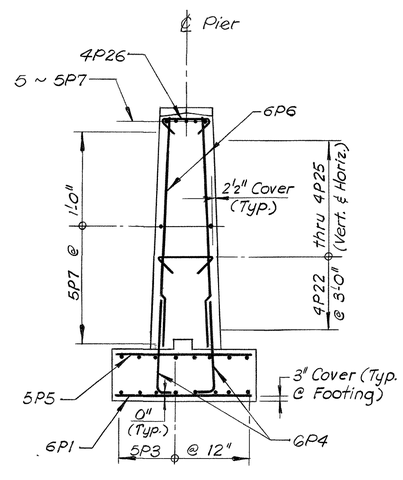

SECTION B-B
Scale: 1/4" = 1'-0"

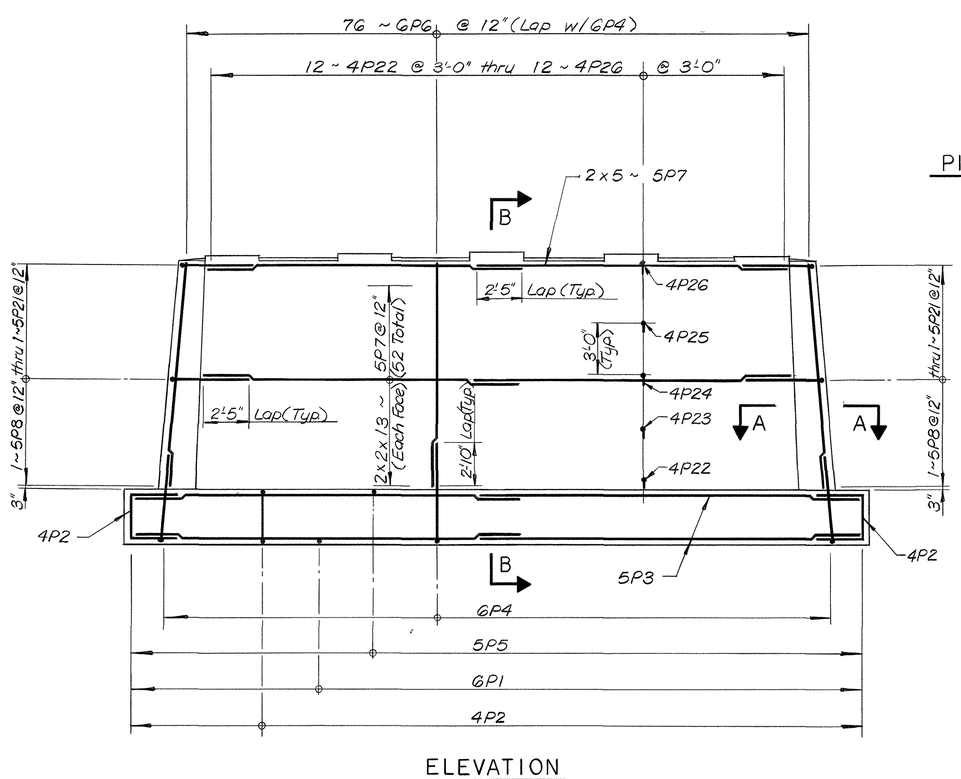

ELEVATION
Scale: 1/4" = 1'-0"

STATE OF NEW HAMPSHIRE
STEVEN H. WHITE No. 3189 LICENSED
PROFESSIONAL ENGINEER

STATE OF NEW HAMPSHIRE
DEPARTMENT OF TRANSPORTATION
BUREAU OF BRIDGE DESIGN

TOWN FRANKLIN-NORTHFIELD BRIDGE NO. 184/127
FEDERAL PROJECT BRZ-163(1) STATE PROJECT T-4198
LOCATION CROSS MILL ROAD OVER WINNIPESAUKEE RIVER

PIER (REINFORCEMENT)

	BY	DATE		BY	DATE
DESIGNED DMN		9/87	CHECKED CWF		9/87
DRAWN BJAN		9/87	CHECKED DMN/MG		9/87
TRACED			CHECKED		
QUANTITIES			CHECKED		

BRIDGE SHEET NO. 9 OF 18
FILE NUMBER 5-5-3-3

Δ	DESCRIPTION	BY	DATE
	REVISIONS		

ANDREWS & CLARK, INC.

REVIEWED BY

PROJ. NO.	SHEET NO.	TOTAL SHEETS
BRZ-163(1)	21	30

MAKEPEACE 130282

FED. ROAD DIV. NO.	STATE	PROJ.	FISCAL YEAR	SHEET NO.	TOTAL SHEETS
1	N.H.				

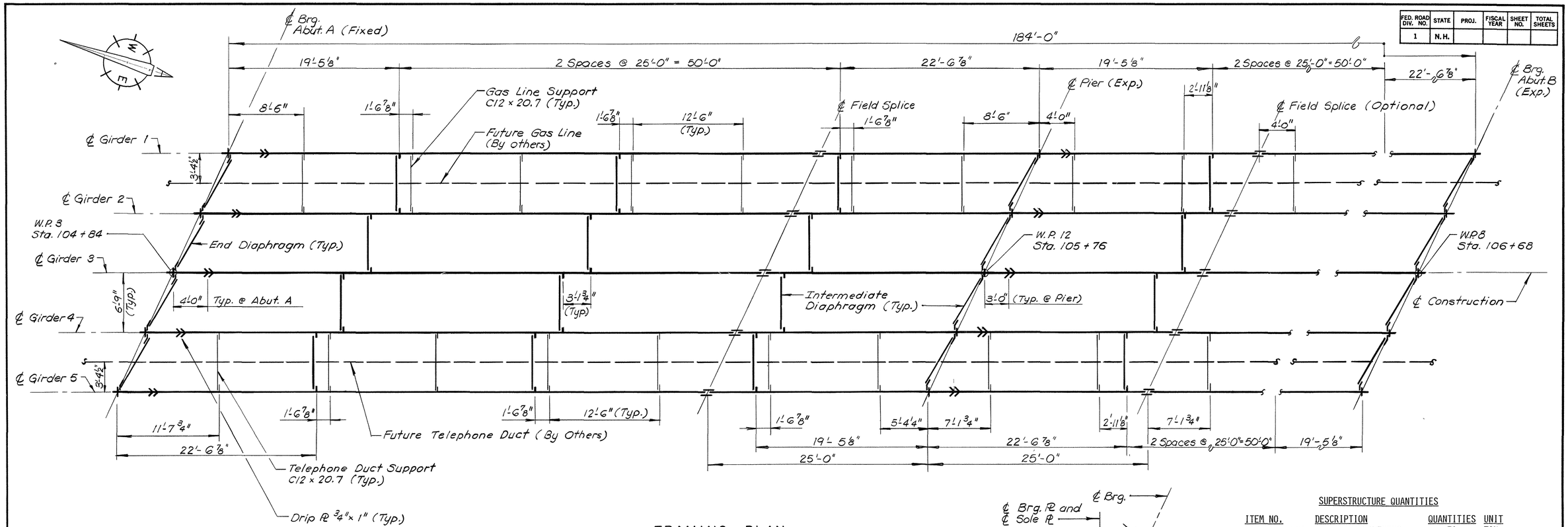

FRAMING PLAN

Scale: 3/16" = 1'-0"

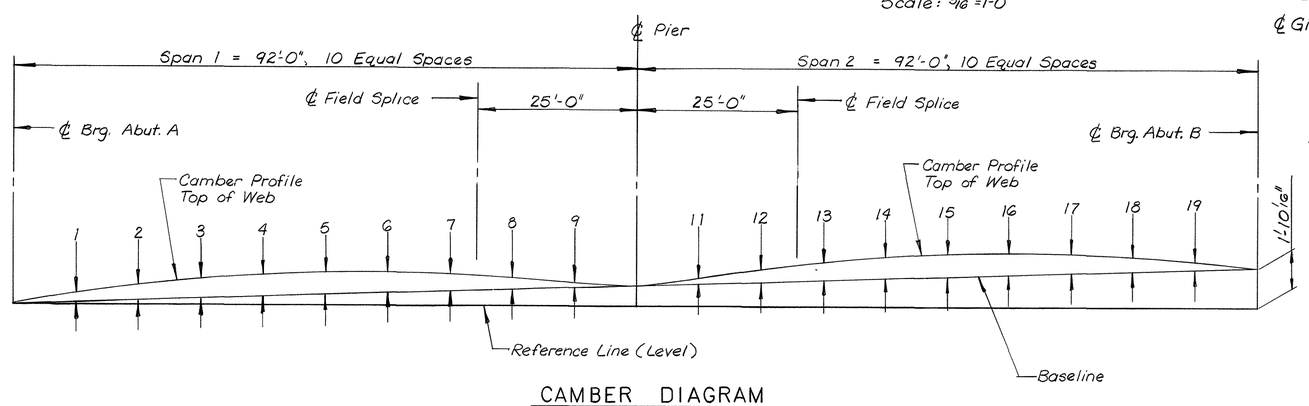

CAMBER DIAGRAM

Not to Scale

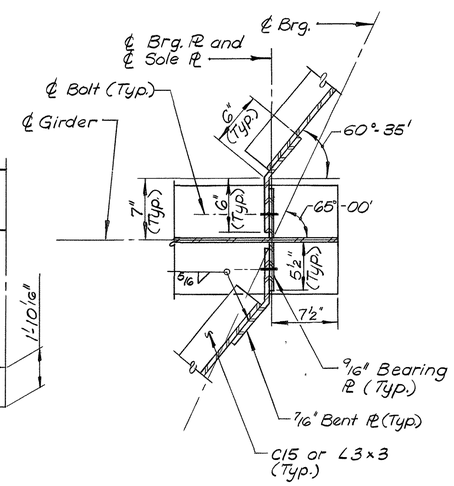

END DIAPHRAGM CONNECTION

Scale: 1½" = 1'-0"

(Diaphragm @ Pier Connection similar)

SUPERSTRUCTURE QUANTITIES

ITEM NO.	DESCRIPTION	QUANTITIES	UNIT
403.11	HOT BITUMINOUS PAVEMENT, MACHINE METHOD	31	TON
403.911	HOT BITUMINOUS BRIDGE PAVEMENT, 1" BASE COURSE WITH POLYESTER FIBER	31	TON
520.7	CONCRETE BRIDGE DECK (167.4 CY)	1	UNIT
534.3	WATER REPELLENT (SILANE-SILOXANE)	17	GAL.
538.1	BARRIER MEMBRANE	573	S.Y.
544.2	REINFORCING STEEL - EPOXY COATED	54,927	LB.
547	SHEAR CONNECTORS (1460 EA)	1	UNIT
550.1	STRUCTURAL STEEL (162,594 LB)	1	UNIT
550.2	BRIDGE SHOES (15 EA)	1	UNIT
561.110	PREFABRICATED EXPANSION JOINT TYPE A (34 LF)	1	UNIT
562.1	ELASTOMERIC SEALANT	12	CU. IN.
563.7	BRIDGE RAILING F	376	L.F.
609.3	STRAIGHT GRANITE CURB (BRIDGE)	379.4	L.F.

CAMBER TABLE

	℄ BRG. ABUT. A	1	2	3	4	5	6	7	8	9	℄ BRG. PIER	11	12	13	14	15	16	17	18	19	℄ BRG. ABUT. B
STEEL DEFLECTION (In.)	0	0.080	0.146	0.191	0.208	0.198	0.163	0.113	0.059	0.017	0	0.017	0.059	0.113	0.163	0.198	0.208	0.191	0.146	0.080	0
CONCRETE DEFLECTION (In.)	0	0.344	0.631	0.823	0.897	0.852	0.703	0.486	0.253	0.074	0	0.074	0.253	0.486	0.703	0.852	0.897	0.823	0.631	0.344	0
S.D.L. DEFLECTION (In.)	0	0.050	0.093	0.122	0.136	0.132	0.113	0.083	0.046	0.014	0	0.014	0.046	0.083	0.113	0.132	0.136	0.122	0.093	0.050	0
TOTAL DEFLECTION (In.)	0	0.474	0.870	1.136	1.241	1.182	0.979	0.682	0.358	0.105	0	0.105	0.358	0.682	0.979	1.182	1.241	1.136	0.870	0.474	0
TOTAL CAMBER (In.)	0	7/16"	7/8"	1⅛"	1¼"	1 3/16"	1"	1 1/16"	⅜"	⅛"	0	⅛"	⅜"	1 1/16"	1"	1 3/16"	1¼"	1⅛"	⅞"	7/16"	0

STATE OF NEW HAMPSHIRE
STEVEN R. WHITE No. 3183 LICENSED
PROFESSIONAL ENGINEER

Δ	DESCRIPTION	BY	DATE

REVISIONS

ANDREWS & CLARK, INC.

STATE OF NEW HAMPSHIRE
DEPARTMENT OF TRANSPORTATION
BUREAU OF BRIDGE DESIGN

TOWN FRANKLIN-NORTHFIELD BRIDGE NO. 184/127
FEDERAL PROJECT BRZ-163(1) STATE PROJECT T-4198
LOCATION CROSS MILL ROAD OVER WINNIPESAUKEE RIVER

FRAMING PLAN

	BY	DATE		BY	DATE	BRIDGE SHEET NO.
DESIGNED RLJ/MG		9/87	CHECKED MG		9/87	10 OF 18
DRAWN RWK		9/87	CHECKED MG		9/87	FILE NUMBER
TRACED			CHECKED			5-5-3-3
QUANTITIES			CHECKED			
REVIEWED BY			PROJ. NO.			SHEET NO. / TOTAL SHEETS
			BRZ-163(1)			22 / 30

MAKEPEACE 130282

FED. ROAD DIV. NO.	STATE	PROJ.	FISCAL YEAR	SHEET NO.	TOTAL SHEETS
1	N.H.				

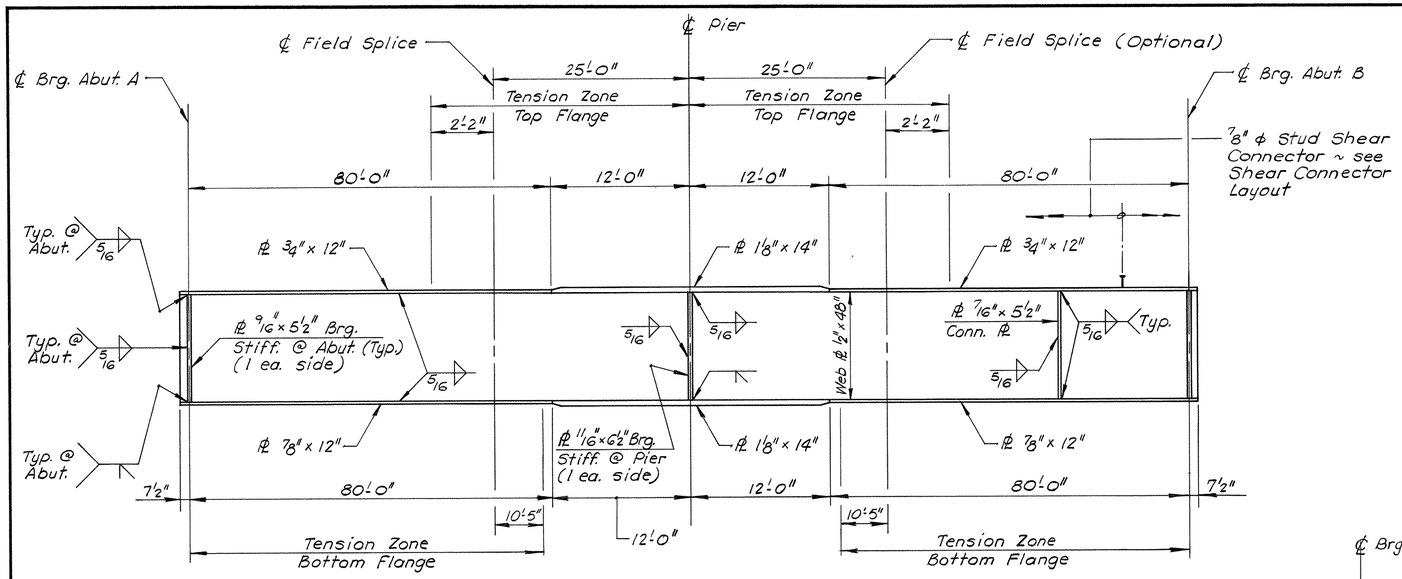

GIRDER ELEVATION

Not to Scale

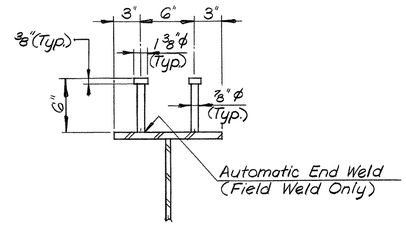

SHEAR CONNECTOR DETAIL

Scale : 1 1/2" = 1'-0"

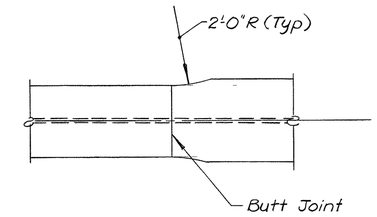

FLANGE TRANSITION DETAIL

Scale : 1" = 1'-0"

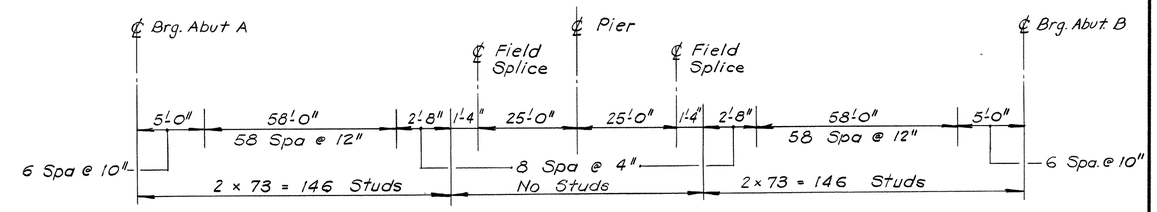

SHEAR CONNECTOR LAYOUT

Not to Scale

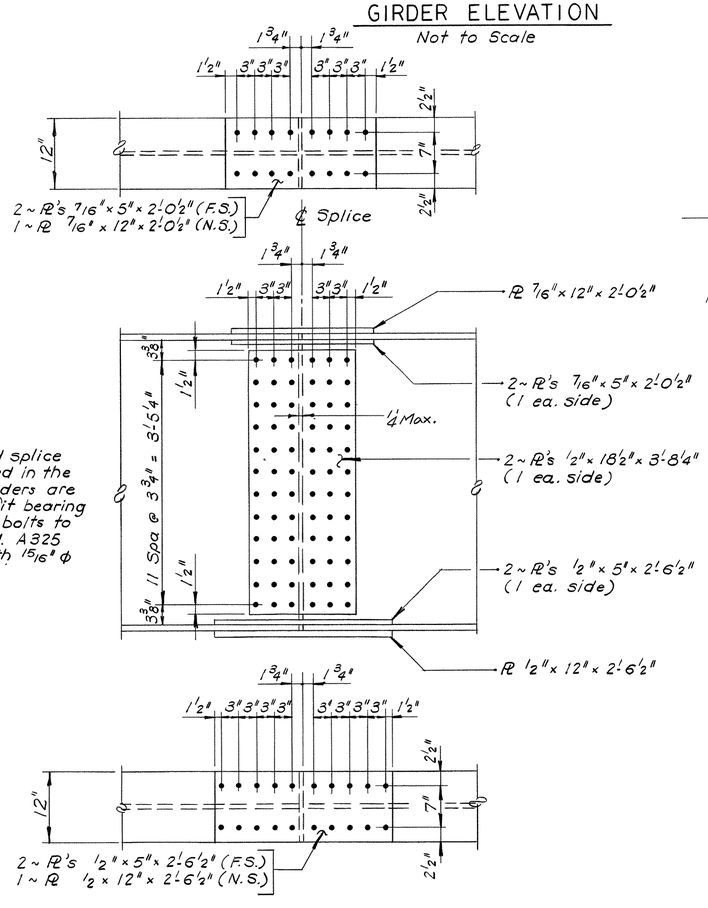

Note :
Holes for field splice shall be reamed in the shop while girders are assembled to fit bearing elevations. All bolts to be 7/8" ϕ A.S.T.M. A325 Type 3 H.S. with 15/16" ϕ holes.

FIELD SPLICE DETAILS

Scale: 1" = 1'-0"

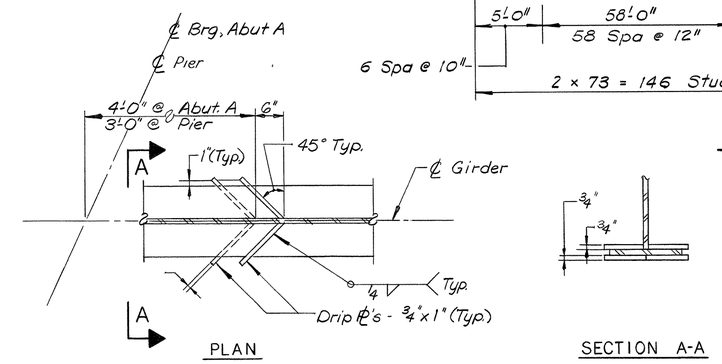

WATER DIVERSION DETAILS

Scale: 1" = 1'-0"

NOTES:

1. ALL WELDS SHALL HAVE CORROSION RESISTANCE AND WEATHERING APPEARANCE AS SPECIFIED FOR THE STRUCTURAL STEEL AND SHALL CONFORM TO THE REQUIREMENTS OF A.W.S. D.1.1.80, STRUCTURAL WELDING CODE, 1980 EDITION AS APPLICABLE FOR BRIDGES AND THE STANDARD SPECIFICATIONS FOR WELDING OF STRUCTURAL HIGHWAY BRIDGES, 1981.
2. ALL STRUCTURAL STEEL TO BE A.A.S.H.T.O. DESIGNATION M222 (A.S.T.M. A588) UNPAINTED UNLESS OTHERWISE NOTED.
3. ALL BOLTS SHALL BE 7/8" PLACED IN 15/16" HOLES. ALL BOLTS AND RELATED HARDWARE SHALL CONFORM TO THE REQUIREMENTS OF A.A.S.H.T.O. M164 (A.S.T.M. A425) TYPE 3 AND SHALL HAVE A CHEMICAL COMPOSITION TO PROVIDE CORROSION RESISTANCE AND WEATHERING CHARACTERISTICS EQUIVALENT TO THAT OF THE STRUCTURAL STEEL.
4. SHEAR CONNECTORS SHALL BE FIELD WELDED TO GIRDER TOP FLANGES.
5. THE NOTCH TOUGHNESS REQUIREMENT OF ARTICLE 550.2.2 SHALL APPLY TO THE WEB AND FLANGES OF THE GIRDERS AND SPLICE PLATES.
6. THE CONCRETE APPROACH SLABS SHALL BE POURED PRIOR TO ERECTION OF THE STRUCTURAL STEEL.
7. THE STATE WILL SHOP INSPECT THE FABRICATION OF THE STRUCTURAL STEEL.
8. THE STRUCTURAL STEEL FABRICATOR SHALL ARRANGE FOR RADIOGRAPHIC AND MAGNETIC PARTICLE INSPECTION OF THE WELDS.
9. BEARING STIFFENERS AND ENDS OF GIRDERS SHALL BE VERTICAL UNDER FULL DEAD LOAD DEFLECTION.
10. SHOP AND FIELD WELDING OF ATTACHMENTS TO ANY EXPOSED PORTION OF THE GIRDERS FOR CONSTRUCTION PURPOSES WILL NOT BE PERMITTED. SHOP OR FIELD ATTACHMENTS TO THE TOP FLANGE FOR CONSTRUCTION PURPOSES MUST BE APPROVED BY THE ADMINISTRATOR, BUREAU OF BRIDGE DESIGN.
11. THE CONTRACTOR SHALL SUBMIT HIS HANDLING AND ERECTION SCHEME TO THE ENGINEER PRIOR TO HANDLING THE STRUCTURAL STEEL IN ACCORDANCE WITH SECTION 550.3.3 & 550.3.4. THIS ERECTION SCHEME SHALL INDICATE THE LOCATION AND NUMBER OF LIFTING POINTS AS DETERMINED BY CHECKING THE L/B RATIOS IN ACCORDANCE WITH SECTION 550.3.3.1.1 TO GUARD AGAINST LATERAL BUCKLING OF THE GIRDERS.

STATE OF NEW HAMPSHIRE
STEVEN H. WHITE
No. 3189
LICENSED
PROFESSIONAL ENGINEER

Δ	DESCRIPTION	BY	DATE
	REVISIONS		

ANDREWS & CLARK, INC.

STATE OF NEW HAMPSHIRE
DEPARTMENT OF TRANSPORTATION
BUREAU OF BRIDGE DESIGN

TOWN FRANKLIN-NORTHFIELD — BRIDGE NO. 184/127
FEDERAL PROJECT BRZ-163(1) — STATE PROJECT T-4198
LOCATION CROSS MILL ROAD OVER WINNIPESAUKEE RIVER

GIRDER DETAILS

	BY	DATE		BY	DATE	BRIDGE SHEET NO.
DESIGNED RLJ		9/87	CHECKED MG		9/87	11 OF 18
DRAWN BJAN		9/87	CHECKED MG		9/87	FILE NUMBER
TRACED			CHECKED			5-5-3-3
QUANTITIES			CHECKED			

REVIEWED BY	PROJ. NO.	SHEET NO.	TOTAL SHEETS
	BRZ-163(1)	23	30

MAKEPEACE 130282

FED. ROAD DIV. NO.	STATE	PROJ.	FISCAL YEAR	SHEET NO.	TOTAL SHEETS
1	N.H.				

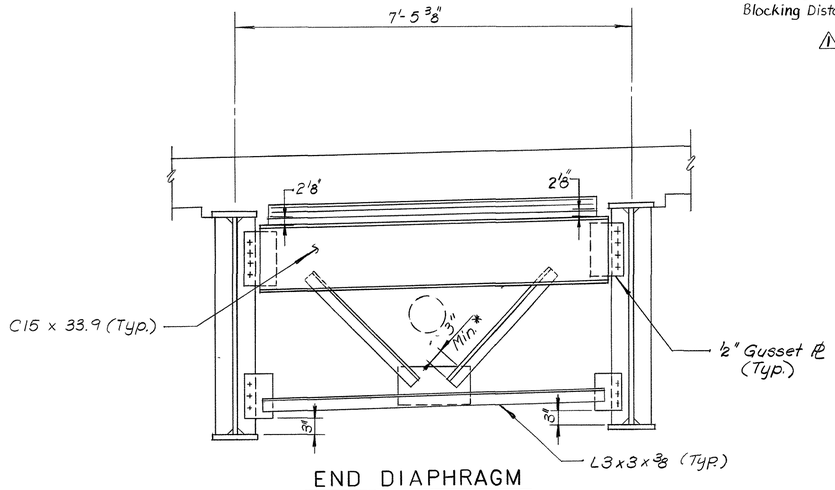

END DIAPHRAGM
Scale: 3/4" = 1'-0"

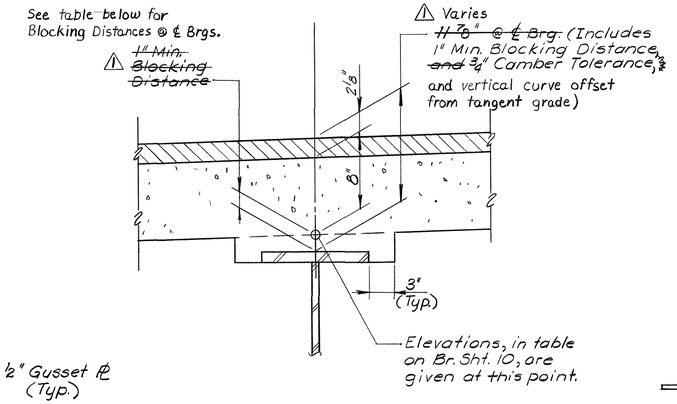

GIRDER HAUNCH DETAIL
Scale: 1 1/2" = 1'-0"

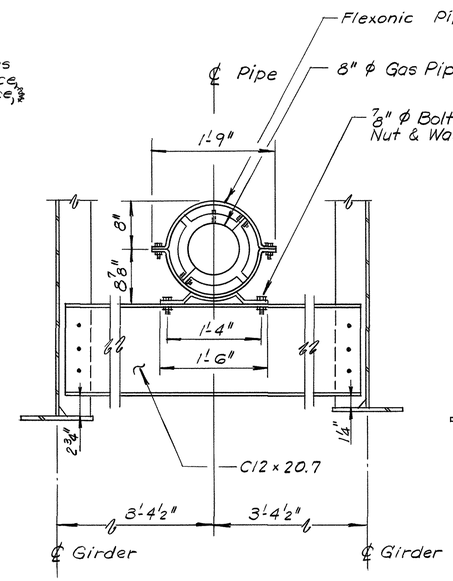

FLEXONIC PIPE ALIGNMENT GUIDE

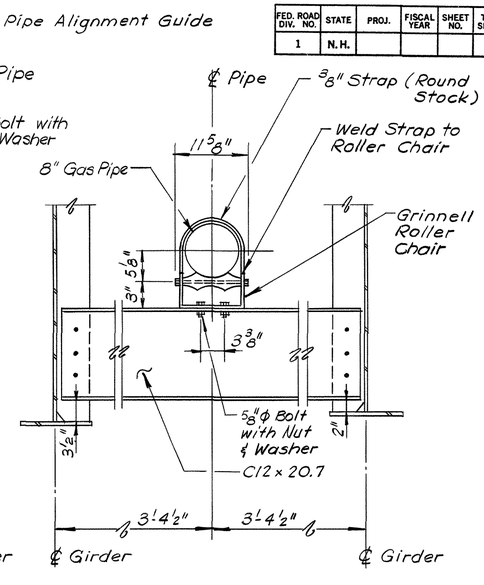

STRAP & ROLLER CHAIR

GAS LINE SUPPORTS (Pipe, Alignment Guide, Strap & Roller Chair by Others)
Scale: 1" = 1'-0"

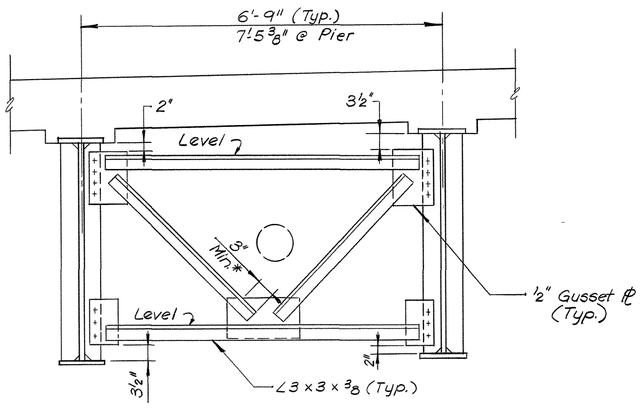

* All Around Weld on Gusset PL Connection to be Terminated 4" min. from edge of Gusset PL, not to be wrapped from one plane to another.

INTERMEDIATE DIAPHRAGM
Scale: 3/4" = 1'-0"

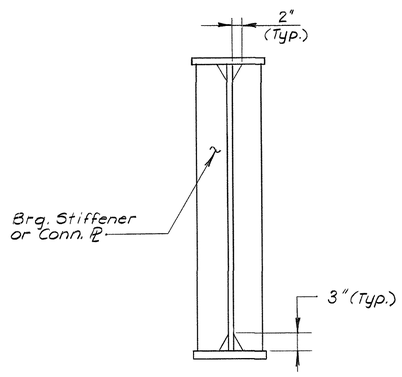

PLATE CLIPPING DETAIL
Scale: 1" = 1'-0"

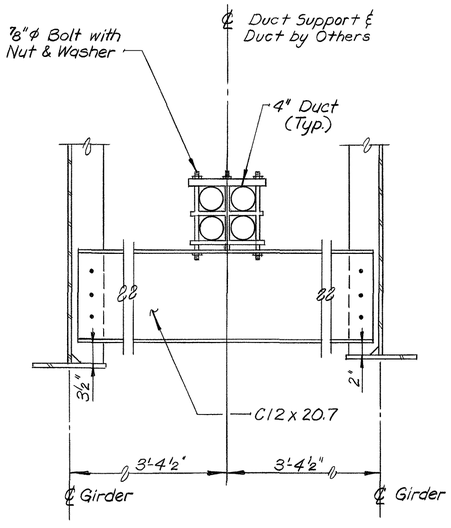

TELEPHONE DUCT SUPPORT
Scale: 1" = 1'-0"

NOTE:
THE GAS LINE IS TO BE ATTACHED TO THE DIAPHRAGMS USING TWO DIFFERENT SLEEVE ARRANGEMENTS. THE FLEXONIC PIPE ALIGNMENT GUIDE IS TO BE INSTALLED ONLY ON THE FIRST DIAPHRAGM AT THE NORTH END OF THE BRIDGE. THE ROLLER CHAIR AND STRAP IS TO BE INSTALLED ON THE OTHER DIAPHRAGMS.

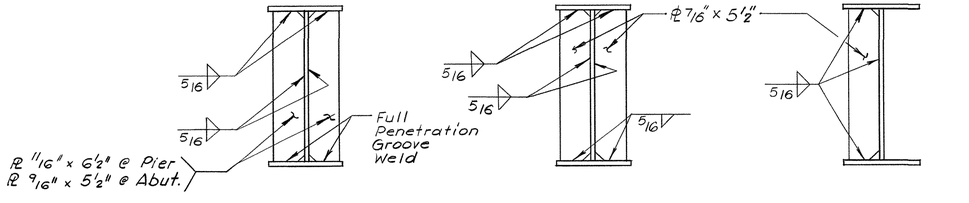

BEARING PL GIRDER

CONN. PL - INTERIOR GIRDER

CONN. PL - FASCIA GIRDER

GIRDER SECTIONS
N.T.S.

⚠

BLOCKING DISTANCES			
	℄ BRG. ABUT. A	℄ BRG. PIER	℄ BRG. ABUT. B
GIRDER 1	2 1/4"	1 3/4"	3 1/8"
" 2	2 3/8"	1 3/4"	2 7/8"
" 3	2 1/2"	1 3/4"	2 5/8"
" 4	2 5/8"	1 3/4"	2 1/2"
" 5	2 7/8"	1 3/4"	2 3/8"

STATE OF NEW HAMPSHIRE
STEVEN R. WHITE No. 3183
LICENSED PROFESSIONAL ENGINEER

⚠	Girder Haunch Detail Revision	SCL	1-29-88
Δ	DESCRIPTION	BY	DATE

REVISIONS

ANDREWS & CLARK, INC.

STATE OF NEW HAMPSHIRE
DEPARTMENT OF TRANSPORTATION
BUREAU OF BRIDGE DESIGN

TOWN FRANKLIN-NORTHFIELD BRIDGE, NO. 184/127
FEDERAL PROJECT BRZ-163(1) STATE PROJECT T-4198
LOCATION CROSS MILL ROAD OVER WINNIPESAUKEE RIVER

FRAMING DETAILS

	BY	DATE		BY	DATE	BRIDGE SHEET NO.
DESIGNED RLJ/MG		9/87	CHECKED JPH/MG		9/87	12 OF 18
DRAWN BJAN		9/87	CHECKED MG		9/87	FILE NUMBER
TRACED			CHECKED			5-5-3-3
QUANTITIES			CHECKED			

REVIEWED BY	PROJ. NO.	SHEET NO.	TOTAL SHEETS
	BRZ-163(1)	24	30

MAKEPEACE 130282

FED. ROAD DIV. NO.	STATE	PROJ.	FISCAL YEAR	SHEET NO.	TOTAL SHEETS
1	N.H.				

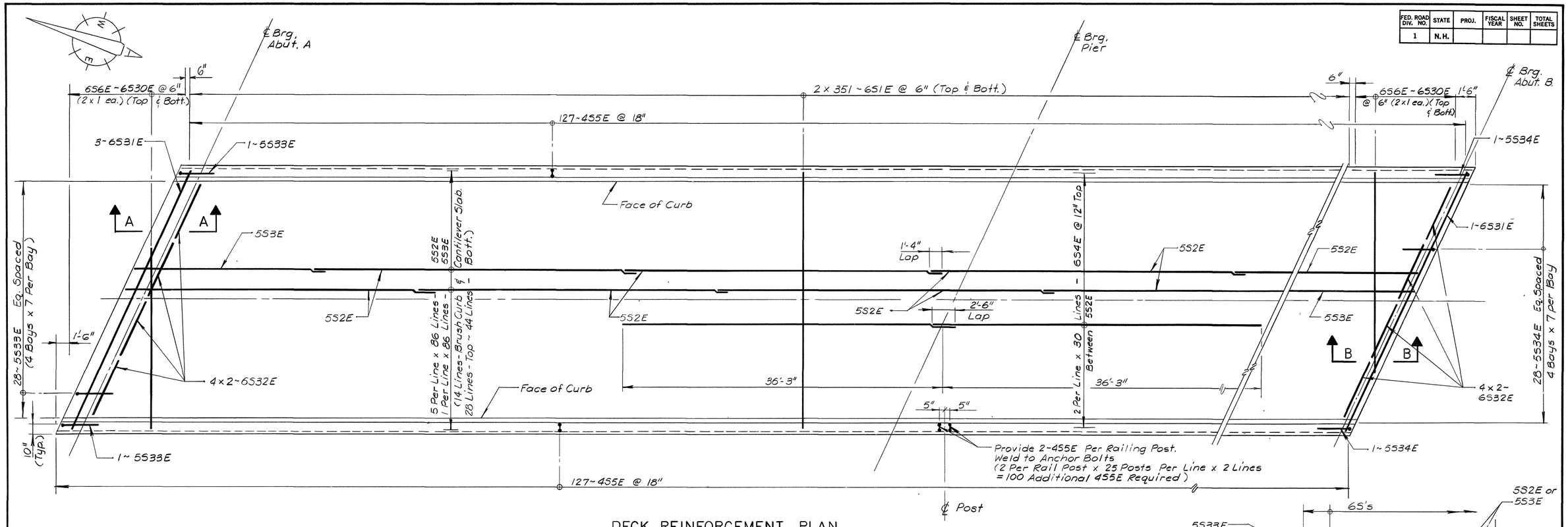

DECK REINFORCEMENT PLAN

Scale : 3/16" = 1'-0"

BOTTOM OF SLAB ELEVATION

	℄ Brg. Abut. A	1	2	3	4	5	6	7	8	9	℄ Brg. Pier	11	12	13	14	15	16	17	18	19	℄ Brg. Abut. B
Girder 1	414.29	414.37	414.46	414.55	414.65	414.74	414.83	414.92	415.01	415.11	415.20	415.29	415.38	415.47	415.57	415.66	415.75	415.84	415.94	416.06	416.20
Girder 2	414.41	414.48	414.57	414.66	414.76	414.85	414.94	415.03	415.12	415.22	415.31	415.40	415.49	415.58	415.68	415.77	415.86	415.95	416.04	416.15	416.29
Girder 3	414.53	414.59	414.68	414.77	414.86	414.95	415.04	415.14	415.23	415.32	415.41	415.51	415.60	415.69	415.78	415.88	415.97	416.06	416.15	416.25	416.38
Girder 4	414.37	414.43	414.51	414.60	414.69	414.79	414.88	414.97	415.06	415.15	415.25	415.34	415.43	415.52	415.61	415.71	415.80	415.89	415.98	416.08	416.19
Girder 5	414.21	414.26	414.34	414.43	414.52	414.61	414.70	414.80	414.89	414.98	415.07	415.16	415.26	415.35	415.44	415.53	415.62	415.72	415.81	415.90	416.01

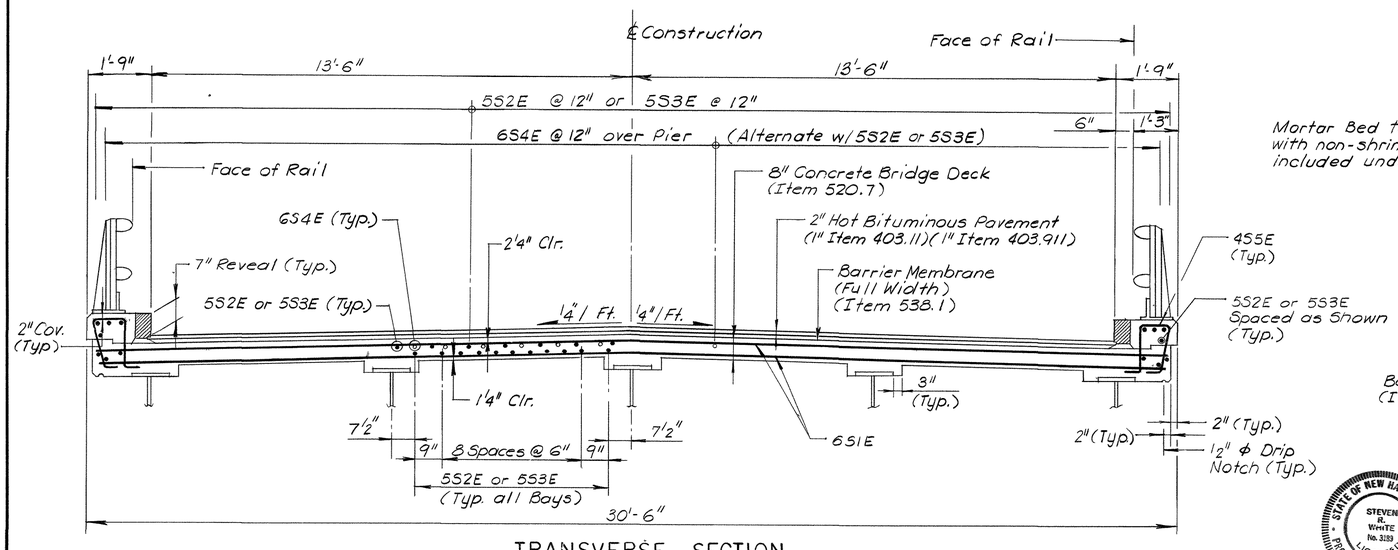

TRANSVERSE SECTION

Scale : 1/2" = 1'-0"

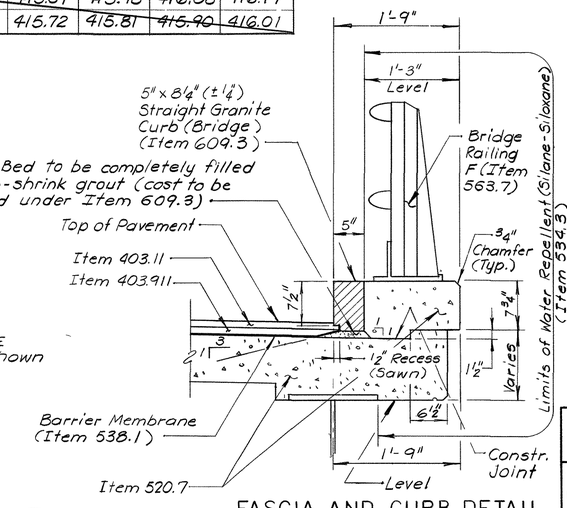

FASCIA AND CURB DETAIL

Scale: 1" = 1'-0"

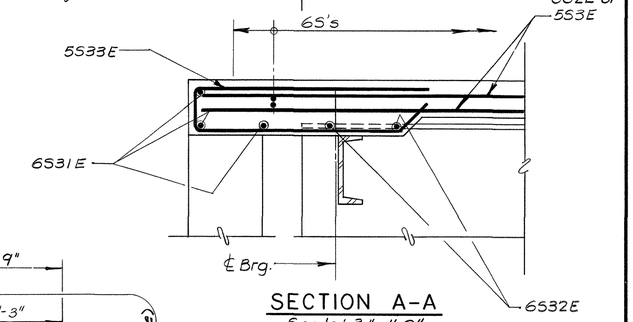

SECTION A-A

Scale: 3/4" = 1'-0"

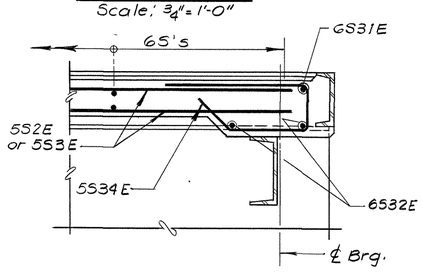

SECTION B-B

Scale: 3/4" = 1'-0"

STATE OF NEW HAMPSHIRE
DEPARTMENT OF TRANSPORTATION
BUREAU OF BRIDGE DESIGN

TOWN FRANKLIN-NORTHFIELD BRIDGE NO. 184/127
FEDERAL PROJECT BRZ-163(1) STATE PROJECT T-4198
LOCATION CROSS MILL ROAD OVER WINNIPESAUKEE RIVER

	DESCRIPTION	BY	DATE
1	Revised - See Br. Sh. No. 15 of 18	JFK	5/88
2			

REVISIONS

ANDREWS & CLARK, INC.

STATE OF NEW HAMPSHIRE — STEVEN R. WHITE No. 3193 — LICENSED PROFESSIONAL ENGINEER

DECK SLAB REINFORCEMENT

	BY	DATE		BY	DATE
DESIGNED	MG	9/87	CHECKED	CWF	9/87
DRAWN	NJC	9/87	CHECKED	MG	9/87
TRACED			CHECKED		
QUANTITIES			CHECKED		

BRIDGE SHEET NO. 13 OF 18
FILE NUMBER. 5-5-3-3

REVIEWED BY	PROJ. NO.	SHEET NO.	TOTAL SHEETS
	BRZ-163(1)	25	30

MAKEPEACE 130282

FED. ROAD DIV. NO.	STATE	PROJ.	FISCAL YEAR	SHEET NO.	TOTAL SHEETS
1	N.H.				

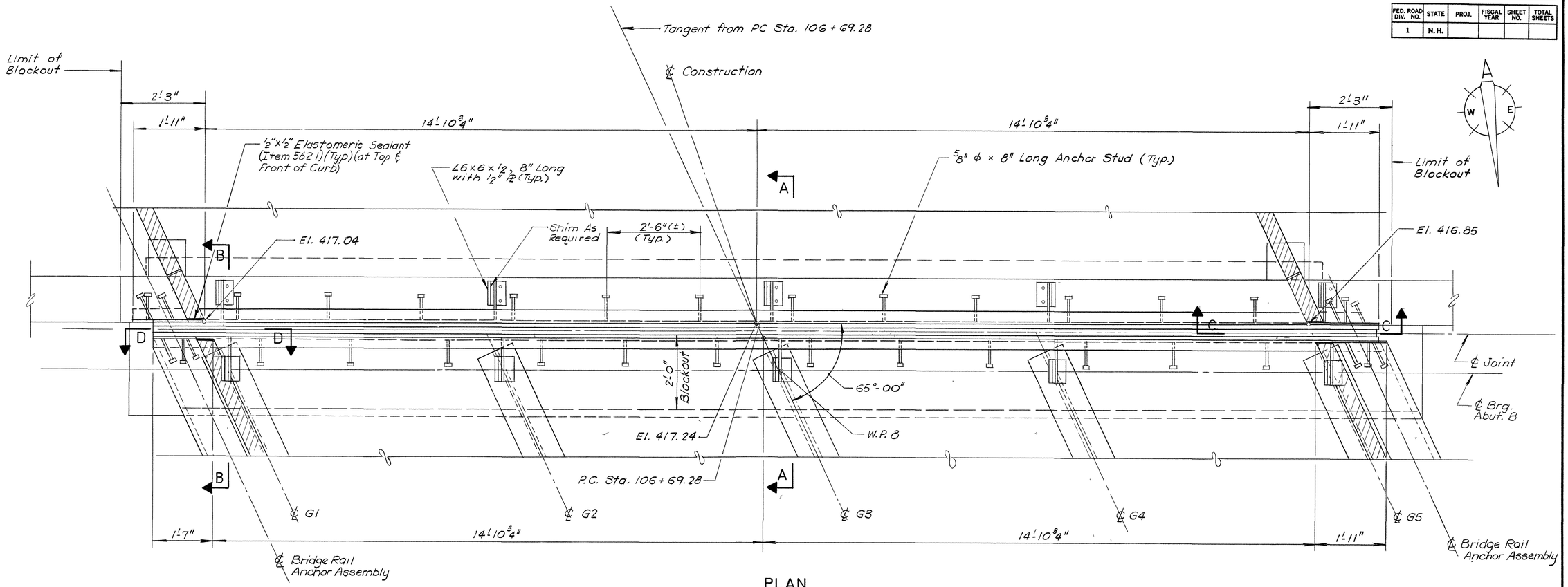

PLAN
Scale: ¾" = 1'-0"

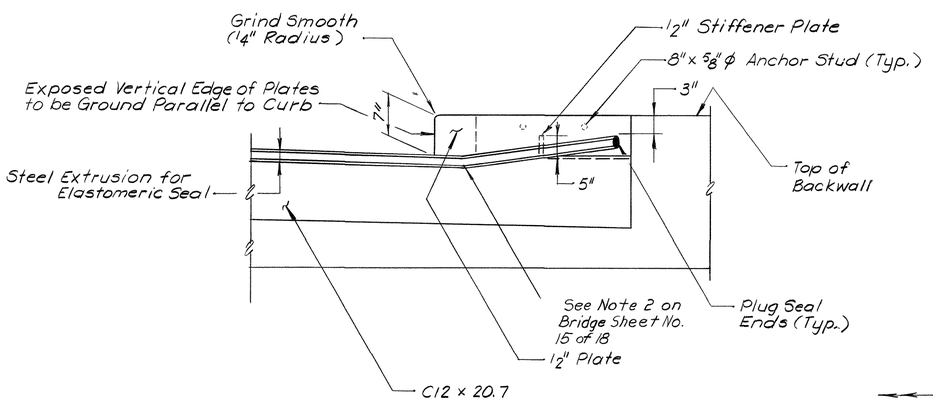

SECTION C-C
Scale: 1" = 1'-0"

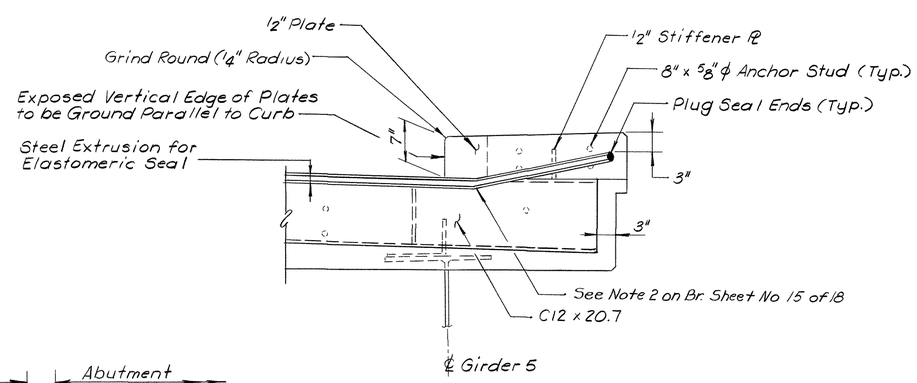

SECTION D-D
Scale: 1" = 1'-0"

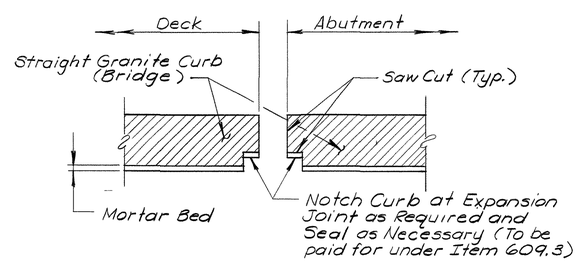

CURB DETAIL
Not To Scale

STATE OF NEW HAMPSHIRE
DEPARTMENT OF TRANSPORTATION
BUREAU OF BRIDGE DESIGN

TOWN FRANKLIN-NORTHFIELD BRIDGE NO. 184/127
FEDERAL PROJECT BRZ-163(1) STATE PROJECT T-4198
LOCATION CROSS MILL ROAD OVER WINNIPESAUKEE RIVER

STATE OF NEW HAMPSHIRE STEVEN H. WHITE No. 3189 LICENSED PROFESSIONAL ENGINEER

PREFABRICATED EXPANSION JOINT (1 of 2)

	BY	DATE		BY	DATE
DESIGNED NJC		9/87	CHECKED MG		9/87
DRAWN NJC		9/87	CHECKED MG		9/87
TRACED			CHECKED		
QUANTITIES			CHECKED		

BRIDGE SHEET NO. 14 OF 18
FILE NUMBER 5-5-3-3

Δ	DESCRIPTION	BY	DATE
	REVISIONS		

ANDREWS & CLARK, INC.

REVIEWED BY

PROJ. NO.	SHEET NO.	TOTAL SHEETS
BRZ-163(1)	26	30

MAKEPEACE 130282

FED. ROAD DIV. NO.	STATE	PROJ.	FISCAL YEAR	SHEET NO.	TOTAL SHEETS
1	N.H.				

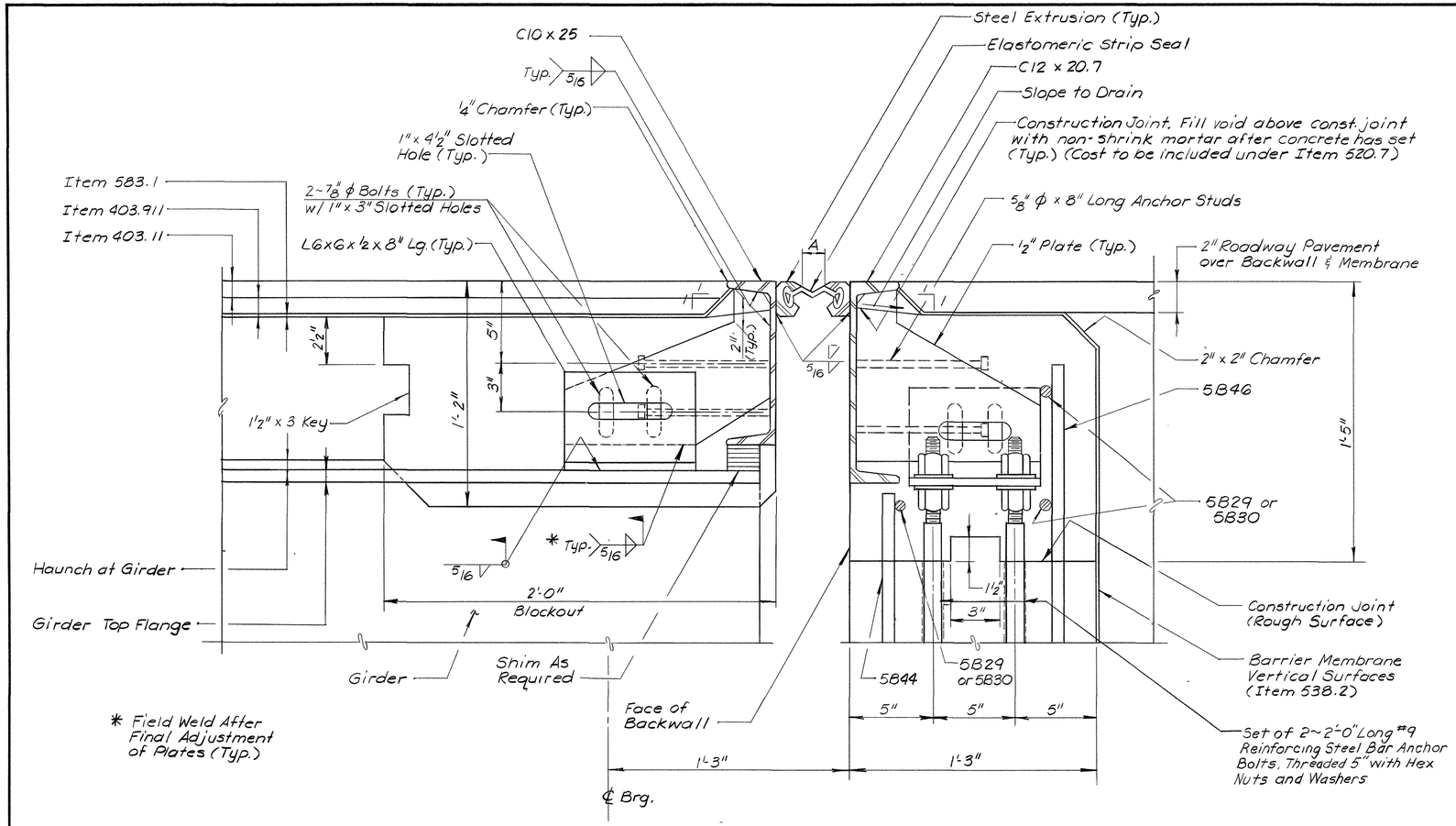

SECTION A-A

Scale: 3"=1'-0"

STRUCT. TEMP. °F	35	45	55	65	75	85	95	105
A	2 3/8"	2 1/4"	2 1/8"	2"	1 7/8"	1 5/8"	1 1/2"	1 3/8"

NOTES:

1. THE EXPANSION JOINT INCLUDING ALL WORK TO INSTALL IT SHALL BE PAID FOR UNDER ITEM 561.110, PREFABRICATED EXPANSION JOINT - TYPE A, (1 REQUIRED).
2. THE EXPANSION JOINT SHALL BE CAPABLE OF 3" OF TOTAL MOVEMENT.
3. SPLICE FOR EXPANSION JOINT STEEL SHALL DEVELOP FULL STRENGTH.
4. ALL STRUCTURAL STEEL SHALL BE AASHTO DESIGNATION M222 (ASTM A588).
5. WELDING SHALL CONFORM TO AWS STRUCTURAL WELDING CODE D1.1.80 AS MODIFIED BY THE 1981 AASHTO STANDARD SPECIFICATIONS FOR WELDING OF STRUCTURAL STEEL HIGHWAY BRIDGES AND NEW HAMPSHIRE STANDARD SPECIFICATIONS (SEE 550.3.2.5).
6. ELASTOMERIC LOCKING SEALS SHALL BE PROVIDED AND SHOP-INSTALLED IN ONE CONTINUOUS PIECE WITH AN APPROVED LUBRICANT-ADHESIVE.
7. SHIPPING AND ADJUSTING DEVICES SHALL BE PROVIDED AT APPROXIMATRLY 4'-0" O.C. EXACT LOCATIONS TO BE DETERMINED BY THE FABRICATOR. ALL DEVICES AND APPARATUS NECESSARY FOR THE SHIPPING, ADJUSTING AND INSTALLATION OF THE EXPANSION JOINT TO BE PROVIDED BY THE FABRICATOR. COST TO BE SUBSIDIARY TO ITEM 561.110.
8. THE EXPANSION JOINT SHALL BE PRESET TO THE TEMPERATURE ANTICIPATED AT THE TIME OF INSTALLATION. FINAL SETTING IN THE FIELD SHALL BE DETERMINED BY THE ENGINEER. SEE THE TEMPERATURE ADJUSTMENT TABLE.
9. JOINT SUPPORT PLATES SHALL BE SHOP-WELDED TO THE EXPANSION JOINT STEEL AND SHALL BE VERTICAL AFTER THE JOINT ASSEMBLY IS ADJUSTED TO THE ROADWAY CROSS-SLOPE AND GRADE.
10. ALL CONCRETE AND STEEL SURFACES IN CONTACT WITH BLOCKOUT CONCRETE SHALL BE COATED WITH AN APPROVED BONDING AGENT (SUBSIDIARY TO ITEM 520.7).
11. THE EXPANSION JOINT ASSEMBLY IS TO BE INSTALLED AFTER THE ABUTMENT IS BACKFILLED AND THE APPROACH SLABS HAVE BEEN POURED.
12. IMMEDIATELY AFTER THE JOINT HAS BEEN SECURED TO THE GIRDERS AND THE ABUTMENT, REMOVE SHIPPING DEVICES AND PLUG WELD ANY BOLT HOLES. GRIND SMOOTH ANY WELDS ON EXPOSED SURFACES.
13. PROTECT TOP OF EXPANSION JOINT DURING PLACEMENT OF CONCRETE AND BITUMINOUS PAVEMENT.
14. A SHIM PACKAGE CONSISTING OF 1-1/4", 1-1/8" AND 2=1/16" SHIM PLATES SHALL BE PROVIDED FOR EACH SUPPORT ANGLE.
15. FILL THE JOINT BETWEEN THE GRANITE CURB AND THE EXPANSION JOINT STEEL WITH MORTAR AND SEAL WITH 1/2" x 1/2" ELASTOMERIC SEALANT - ITEM 562.1.
16. THE EXPANSION JOINT ASSEMBLY SHALL BE MANUFACTURED TO FIT ROADWAY AND BRUSH CURB CROSS SLOPES AND SHALL RUN CONTINUOUSLY BETWEEN LIMITS AS SHOWN. ALL SPLICES SHALL BE SHOP WELDED AND ALL SURFACES IN CONTACT WITH ROADWAY TRAFFIC OR LOCKING EDGE SHALL BE GROUND SMOOTH.
17. DETAIL SHOP DRAWINGS SHALL BE SUBMITTED FOR APPROVAL.
18. FOR LOCATION OF SECTIONS A-A AND B-B, SEE BRIDGE SHEET 14 OF 18.

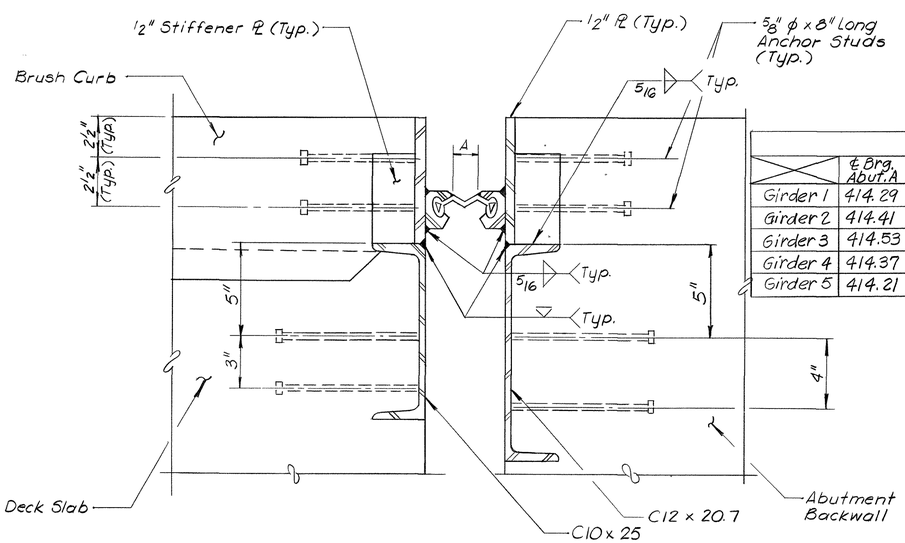

SECTION B-B

Scale: 3"=1'-0"

△1 BOTTOM OF SLAB ELEVATION

	℄ Brg. Abut. A	1	2	3	4	5	6	7	8	9	℄ Brg. Pier	11	12	13	14	15	16	17	18	19	℄ Brg. Abut. B
Girder 1	414.29	414.40	414.52	414.63	414.74	414.82	414.90	414.97	415.03	415.12	415.20	415.30	415.40	415.52	415.64	415.74	415.84	415.92	416.00	416.09	416.20
Girder 2	414.41	414.51	414.63	414.74	414.85	414.93	415.01	415.08	415.14	415.23	415.31	415.41	415.51	415.63	415.75	415.85	415.95	416.03	416.10	416.18	416.29
Girder 3	414.53	414.62	414.74	414.85	414.95	415.03	415.11	415.19	415.25	415.33	415.41	415.52	415.62	415.74	415.85	415.96	416.06	416.14	416.21	416.28	416.38
Girder 4	414.37	414.46	414.57	414.68	414.78	414.87	414.95	415.02	415.08	415.16	415.25	415.35	415.45	415.57	415.68	415.79	415.89	415.97	416.04	416.11	416.19
Girder 5	414.21	414.29	414.40	414.51	414.61	414.69	414.77	414.85	414.91	414.99	415.07	415.17	415.28	415.40	415.51	415.61	415.71	415.80	415.87	415.93	416.01

STATE OF NEW HAMPSHIRE
STEVEN R. WHITE
No. 3189
LICENSED
PROFESSIONAL ENGINEER

△1	Revised Bottom of Slab Elevations	JFK	5/88
△	DESCRIPTION	BY	DATE

REVISIONS

ANDREWS & CLARK, INC.

STATE OF NEW HAMPSHIRE
DEPARTMENT OF TRANSPORTATION
BUREAU OF BRIDGE DESIGN

TOWN FRANKLIN-NORTHFIELD BRIDGE NO. 184/127
FEDERAL PROJECT BRZ-163(1) STATE PROJECT T-4198
LOCATION CROSS MILL ROAD OVER WINNIPESAUKEE RIVER

PREFABRICATED EXPANSION JOINT (2 of 2)

	BY	DATE		BY	DATE	
DESIGNED NJC		9/87	CHECKED MG		9/87	BRIDGE SHEET NO. 15 OF 18
DRAWN NJC		9/87	CHECKED MG		9/87	FILE NUMBER 5-5-3-3
TRACED			CHECKED			
QUANTITIES			CHECKED			

REVIEWED BY

PROJ. NO.	SHEET NO.	TOTAL SHEETS
BRZ-163(1)	27	30

MAKEPEACE 130282

FED. ROAD DIV. NO.	STATE	PROJ.	FISCAL YEAR	SHEET NO.	TOTAL SHEETS
1	N.H.				

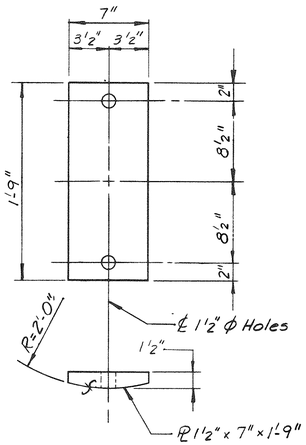

SOLE PLATE

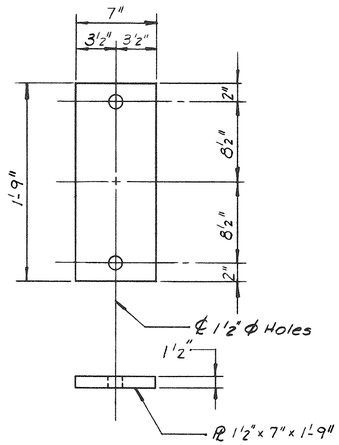

MASONRY PLATE

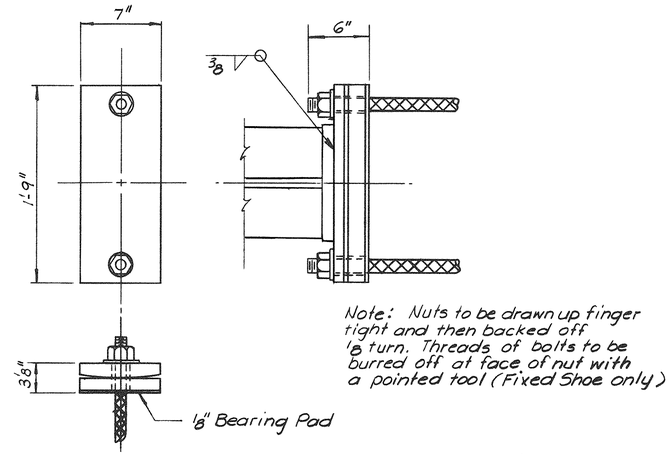

SHOE ASSEMBLY

FIXED SHOE – ABUTMENT A (5 REQUIRED)

Not to Scale

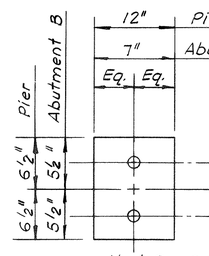

SOLE PLATE

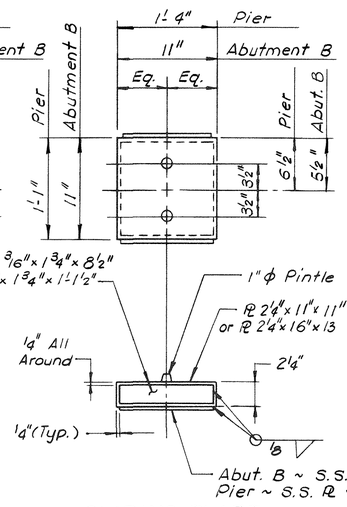

SLIDING PLATE

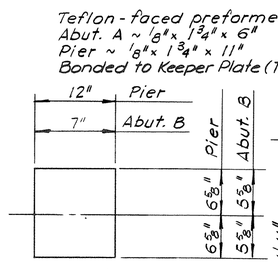

PREFORMED FABRIC PAD

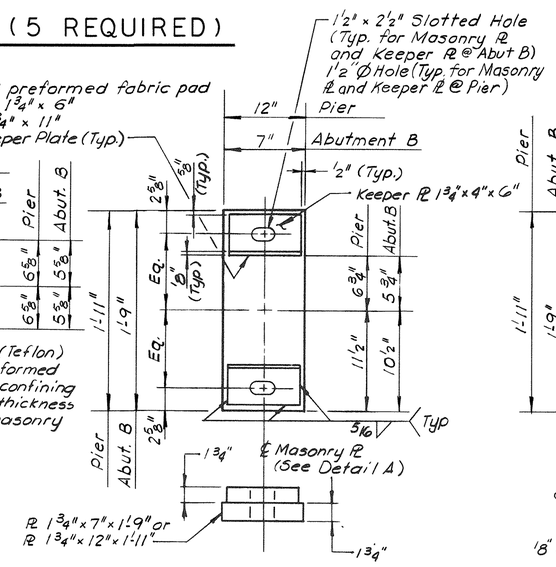

MASONRY PLATE

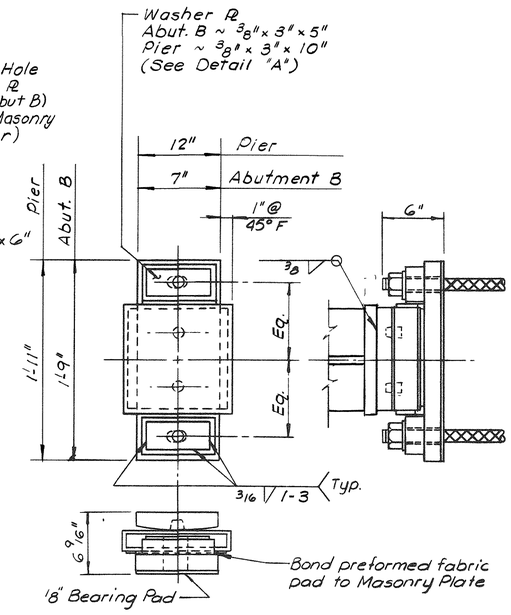

SHOE ASSEMBLY

EXPANSION SHOE – ABUTMENT B & PIER (10 REQUIRED)

Not to Scale

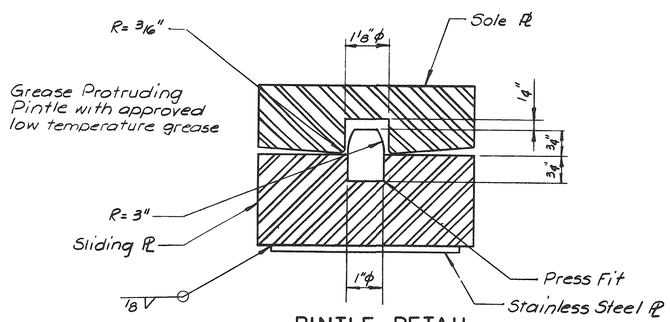

PINTLE DETAIL

N.T.S.

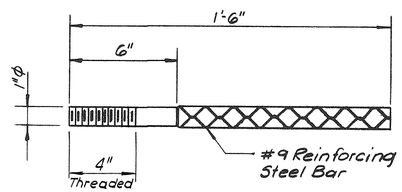

ANCHOR BOLT DETAIL

Scale: 3" = 1'-0"

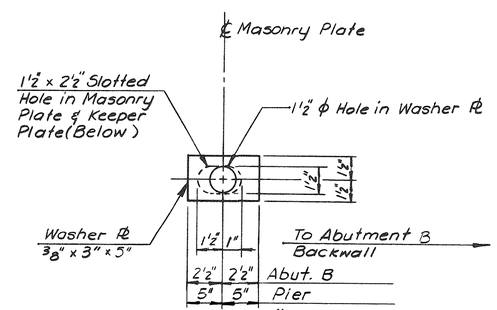

DETAIL "A"

Not to Scale

NOTES:

1. EXPANSION SHOE AND FIXED SHOE ASSEMBLIES INCLUDING ANCHOR BOLTS TO BE PAID FOR AS BRIDGE SHOES, ITEM 550.2.
2. ALL PLATES TO BE FLAT AND TRUE AFTER WELDING.
3. ALL STEEL PLATES SHALL CONFORM TO AASHTO M-222 (ASTM A588) UNPAINTED, EXCEPT FOR STAINLESS STEEL, AISI TYPE 304 (ASTM A240).
4. ANCHOR BOLTS SHALL BE FABRICATED ACCORDING TO SECTION 550.2.5. ANCHOR BOLTS SHALL BE EMBEDDED 12" INTO MASONRY TO ATTAIN A 6" PROJECTION ABOVE THE FINAL CONCRETE BEARING SURFACE.
5. A SHIM PLATE (NOT SHOWN) SHALL BE PROVIDED BETWEEN THE BEARING PAD AND THE MASONRY PLATE FOR ALL BEARING PEDESTALS NOT FINISHED TO EXACT ELEVATIONS. SEE BRIDGE SHEET NO. 6 OF 18 FOR THE PROCEDURE TO DETERMINE THE SHIM PLATE THICKNESS.
6. THE STAINLESS STEEL PLATES SHALL BE 3/16" THICK WITH THE BOTTOM SURFACES HAVING A 2B FINISH.
7. WELD THE STAINLESS STEEL PLATES TO THE BOTTOM AND SIDES OF THE SLIDING PLATE ALL AROUND WITH A 1/8" FILLET WELD.
8. BOND THE PREFORMED FABRIC PADS TO THE TOP OF THE STEEL MASONRY PLATES AND TO THE SIDES OF THE KEEPER PLATES WITH AN APPROVED ADHESIVE. THE SURFACE PREPARATION OF THE FABRIC PADS AND STEEL PLATES SHALL BE ACCORDING TO THE MANUFACTURER'S RECOMMENDATION.
9. THE BONDED PREFORMED FABRIC PADS SHALL BE THOSE MANUFACTURED BY AN APPROVED SUPPLIER WITH PROVEN EXPERIENCE IN THE FIELD.
10. THE BEARING PAD SHALL COMPLY WITH THE AASHTO SPECIFICATION 10.3.12, DIV. II, PREFORMED FABRIC PADS AND SHALL MEET THE ENVIRONMENTAL REQUIREMENTS OF MIL-E-5272 AND THE REQUIREMENTS OF MIL-C882D. A CERTIFICATE OF COMPLIANCE SHALL BE FURNISHED FOR THE ABOVE.
11. ALL ANCHOR BOLTS, NUTS AND WASHERS SHALL BE GALVANIZED.
12. TFE RESIN SHALL BE VIRGIN MATERIAL MEETING THE REQUIREMENTS OF ASTM DESIGNATION D-1457 AND AASHTO 1983 SPECIFICATION 27.2, DIV. II.
13. THE EXPANSION BEARING SHALL BE ADJUSTED FOR TEMPERATURE AND THE EFFECT OF TOTAL DEAD LOAD DEFLECTION. THE SLIDING PLATE OF THE EXPANSION BEARING SHALL BE CENTRALLY LOCATED ON THE MASONRY PLATE AT 45°F. THE BEAM TEMPERATURE CORRECTION IS 0.01196'/10°F. THE TEMPERATURE ADJUSTMENT TABLE INCORPORATING THE BEAM DIRECTION CORRECTION SHALL BE SUBMITTED WITH THE SHOP DRAWINGS BY THE CONTRACTOR FOR APPROVAL BY THE ENGINEER.

STATE OF NEW HAMPSHIRE
STEVEN R. WHITE
No. 3189
LICENSED
PROFESSIONAL ENGINEER

STATE OF NEW HAMPSHIRE
DEPARTMENT OF TRANSPORTATION
BUREAU OF BRIDGE DESIGN

TOWN FRANKLIN-NORTHFIELD BRIDGE NO. 184/127
FEDERAL PROJECT BRZ-163(1) STATE PROJECT T-4198
LOCATION CROSS MILL ROAD OVER WINNIPESAUKEE RIVER

Δ	DESCRIPTION	BY	DATE

REVISIONS

ANDREWS & CLARK, INC.

Sheet Scale as noted

BEARING DETAILS

	BY	DATE		BY	DATE	BRIDGE SHEET NO.
DESIGNED MG		9/87	CHECKED JPH		9/87	16 OF 18
DRAWN RWK		9/87	CHECKED MG		9/87	FILE NUMBER
TRACED			CHECKED			5-5-3-3
QUANTITIES			CHECKED			

REVIEWED BY

PROJ. NO.	SHEET NO.	TOTAL SHEETS
BRZ-163(1)	28	30

FED. ROAD DIV. NO.	STATE	PROJ.	FISCAL YEAR	SHEET NO.	TOTAL SHEETS
1	N.H.				

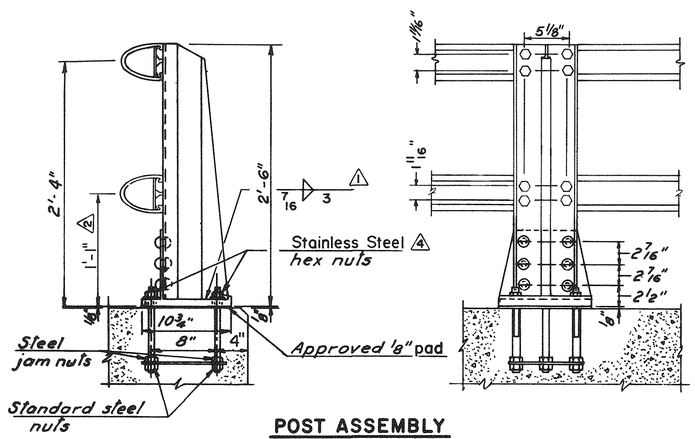

POST ASSEMBLY
(Scale: 1 1/2" = 1'-0")

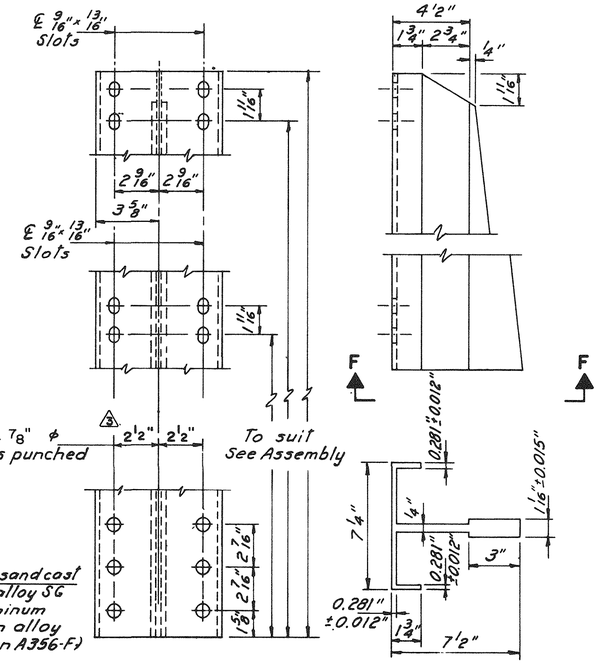

VIEW F-F

POST DETAILS
Scale: 3" = 1'-0"

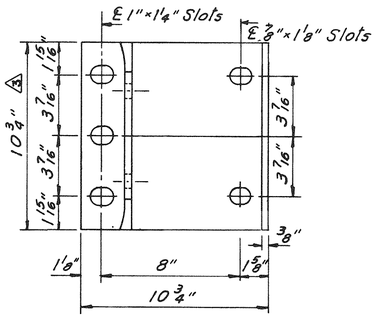

POST BASE DETAILS
Scale: 3" = 1'-0"

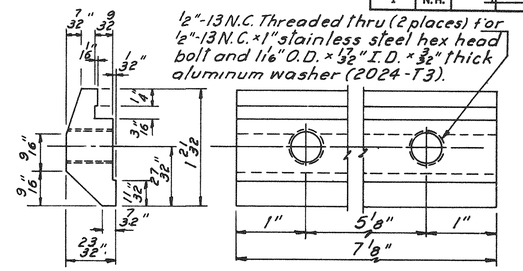

RAIL CLAMP BAR
Full Size

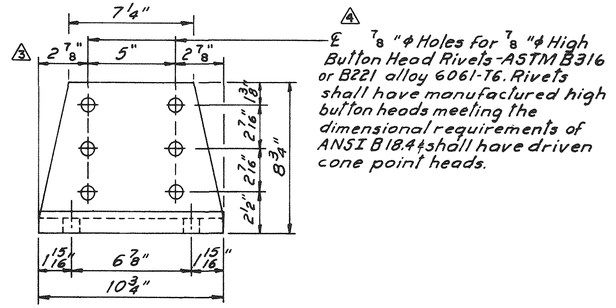

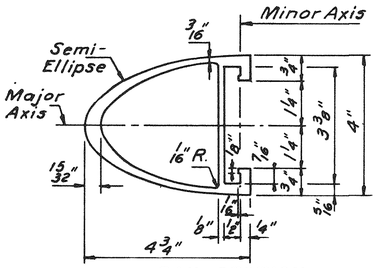

RAIL SECTION
Half Size

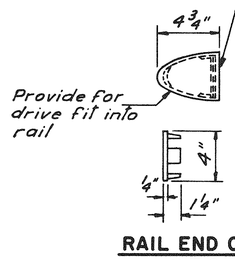

RAIL END CAP
N.T.S.

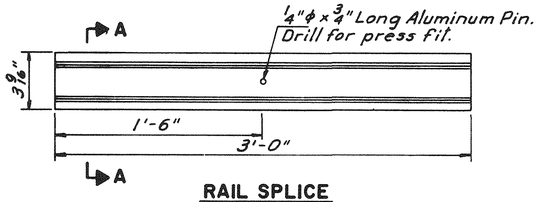

RAIL SPLICE
N.T.S.

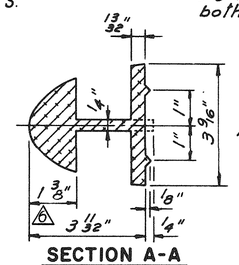

SECTION A-A
Half Size

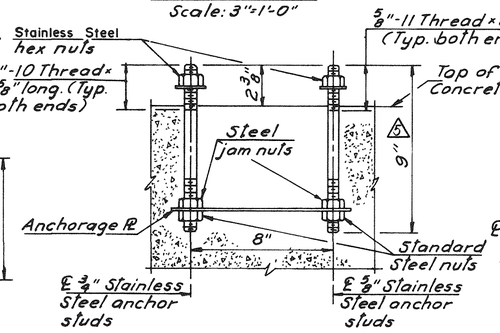

BARRIER ANCHOR ASSEMBLY
Scale: 3" = 1'-0"

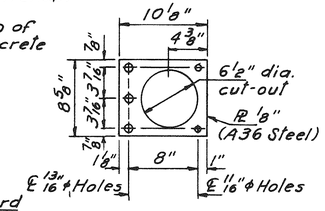

ANCHORAGE PLATE
Scale: 1 1/2" = 1'-0"

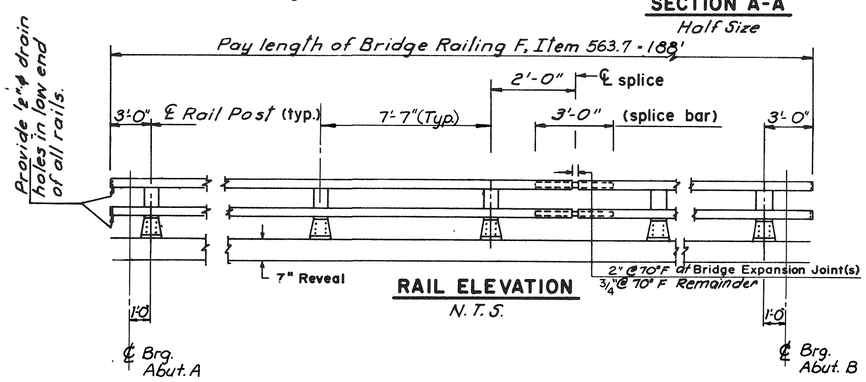

RAIL ELEVATION
N.T.S.

ANCHOR ASSEMBLY NOTES:

1. 3/4" ϕ 5/8" American standard finished hexagon steel nuts on bottom of anchor assembly, 3/4" ϕ 5/8" American standard finished hexagon steel jam nuts on top of anchorage plate.
2. 3/4" ϕ 5/8" stainless steel hexagon nuts on top ends of bolts with Class 2B threads. 13/16" I.D., 1 1/2" O.D., 1/8" thick aluminum washers under nuts on top. All nuts to comply with American Hexagon ANSI Spec. B 18.2. Stainless steel hexagon nuts shall have full threads.

RAIL NOTES:

1. Posts to be normal to finished grade.
2. Threads for anchor bolts may be rolled or cut. If cut threads are used, bolt diameter shall not be less than nominal diameter. If rolled threads are used, bolt diameter shall not be less than root diameter of threads.
3. Joints in rail length shall be spliced as detailed.
4. Ends of tube sections shall be sawed or milled.
5. Cut ends to be true and smooth. Each rail section shall be attached to a minimum of four posts.
6. Grind all edges smooth.

MATERIAL:

1. Aluminum extrusions (posts, bases, rails, rail splices, pins and clamp bars) - ASTM B221, alloy 6061-T6 or alloy 6351-T5 (min. 10% elongation).
2. Stainless steel anchor studs, hex head bolts, and hex nuts (type 302) - ASTM A276 (type 430 mod. or type 304 mod.), (100,000 psi and 15% elongation).
3. Steel embedded jam and hex nuts - ASTM A563 grade A, or better.
4. Aluminum washers - ASTM B209, alloy 2024-T3 alclad.
5. Preformed elastomeric bearing pad meeting the requirements of AASHTO M251.

△	DESCRIPTION	BY	DATE
6	Dimension change		3/87
5	Shorten bolts to 9"		1/85
4	Larger Rivets and steel nuts		2/84
3	New dimensions for post base plate		2/84
2	Bottom rail element lowered		2/82
1	Added weld of post to base plate		6/83

REVISIONS

ANDREWS & CLARK, INC.

STATE OF NEW HAMPSHIRE
DEPARTMENT OF TRANSPORTATION
BUREAU OF BRIDGE DESIGN

TOWN FRANKLIN-NORTHFIELD BRIDGE NO. 184/127
FEDERAL PROJECT BRZ-163(1) STATE PROJECT T-4198
LOCATION CROSS MILL ROAD OVER WINNIPESAUKEE RIVER

BRIDGE RAIL

	BY	DATE		BY	DATE
DESIGNED NHDOT			CHECKED NHDOT/MG		9/87
DRAWN NHDOT			CHECKED MG		9/87
TRACED			CHECKED		
QUANTITIES			CHECKED		

BRIDGE SHEET NO. 17 OF 18
FILE NUMBER 5-5-3-3

REVIEWED BY

PROJ. NO.	SHEET NO.	TOTAL SHEETS
BRZ-163(1)	29	30

FED. ROAD DIV. NO.	STATE	PROJ.	FISCAL YEAR	SHEET NO.	TOTAL SHEETS
1	N.H.				

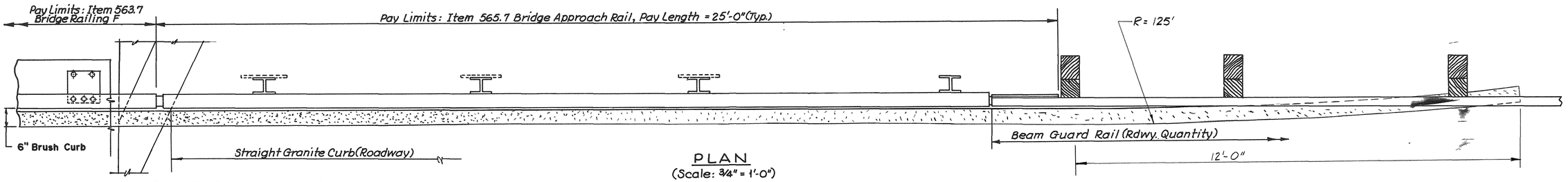

PLAN
(Scale: 3/4" = 1'-0")

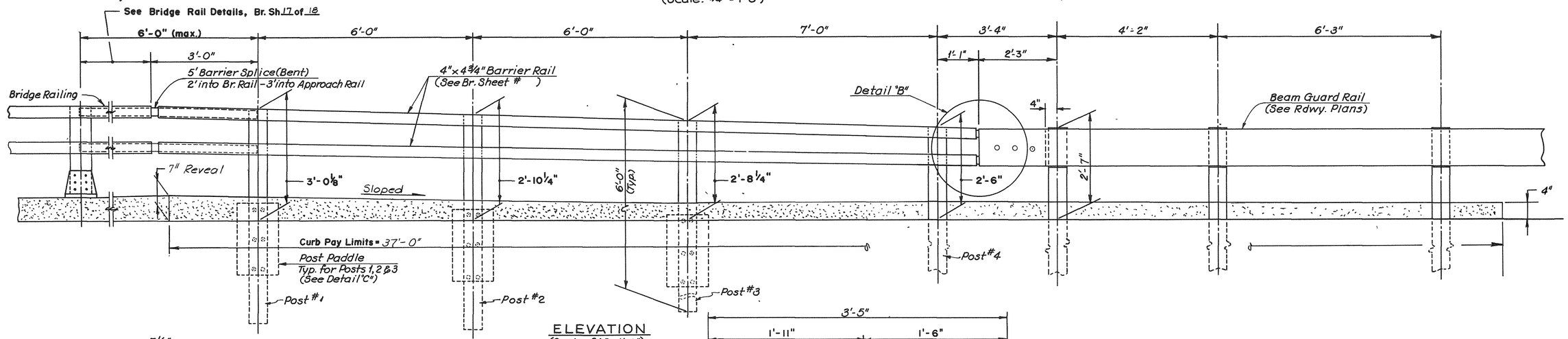

ELEVATION
(Scale: 3/4" = 1'-0")

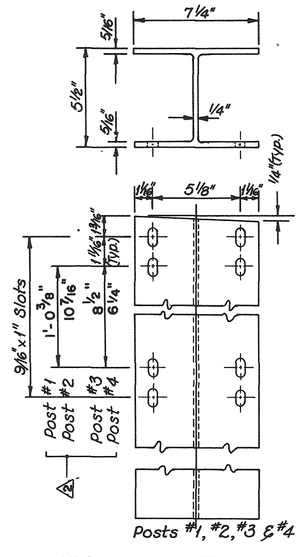

FRONT ELEVATION
(Scale: 3" = 1'-0")

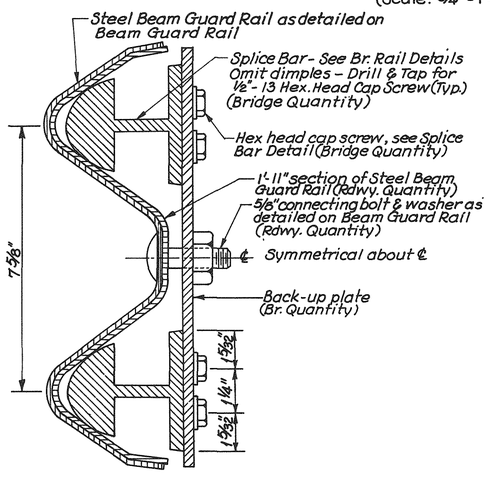

SECTION "A-A"
(Half Scale)

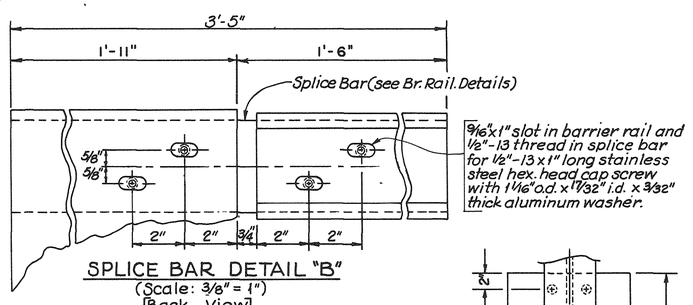

SPLICE BAR DETAIL "B"
(Scale: 3/8" = 1")
[Back View]

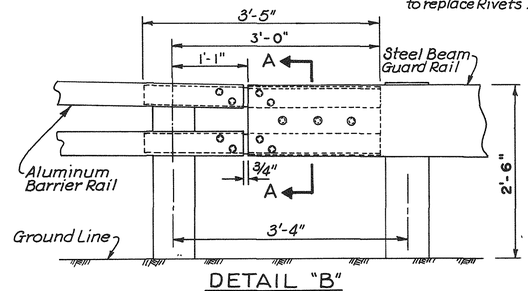

DETAIL "B"
(Scale: 1" = 1'-0")

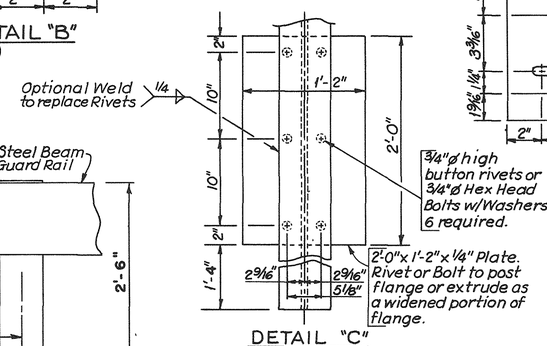

DETAIL "C"
(Scale: 1 1/2" = 1'-0")

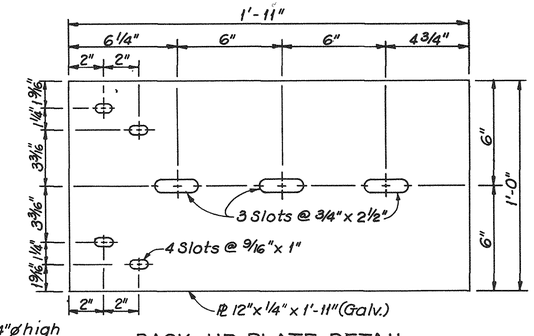

BACK-UP PLATE DETAIL
(Scale: 1/4" = 1")

STATE OF NEW HAMPSHIRE
DEPARTMENT OF TRANSPORTATION
BUREAU OF BRIDGE DESIGN

TOWN FRANKLIN NORTHFIELD — BRIDGE NO. 184/127
FEDERAL PROJECT BRZ-163(1) — STATE PROJECT T-4198
LOCATION CROSS MILL ROAD OVER WINNIPESAUKEE RIVER

Δ	DESCRIPTION	BY	DATE

REVISIONS

ANDREWS & CLARK, INC.

	BY	DATE
DESIGNED NHDOT		
DRAWN NHDOT		
TRACED		
QUANTITIES		

	BY	DATE
CHECKED NHDOT/MG		9/87
CHECKED MG		9/87
CHECKED		
CHECKED		

REVIEWED BY

BRIDGE APPROACH RAIL

BRIDGE SHEET NO.	FILE NUMBER
18 OF 18	5-5-3-3

PROJ. NO.	SHEET NO.	TOTAL SHEETS
BRZ-163(1)	30	30