STATE OF NEW HAMPSHIRE
DEPARTMENT OF TRANSPORTATION

CONSTRUCTION PLANS
FEDERAL AID PROJECT

X-A004(170)
N.H. PROJECT NO. 29533
US ROUTE 202/4 & NH ROUTE 9

DESIGN DATA	
AVERAGE DAILY TRAFFIC 2015	14,800
AVERAGE DAILY TRAFFIC 2035	18,000
PERCENT OF TRUCKS	9.2%
DESIGN SPEED	40-55 MPH
LENGTH OF PROJECT	5.2 MI.

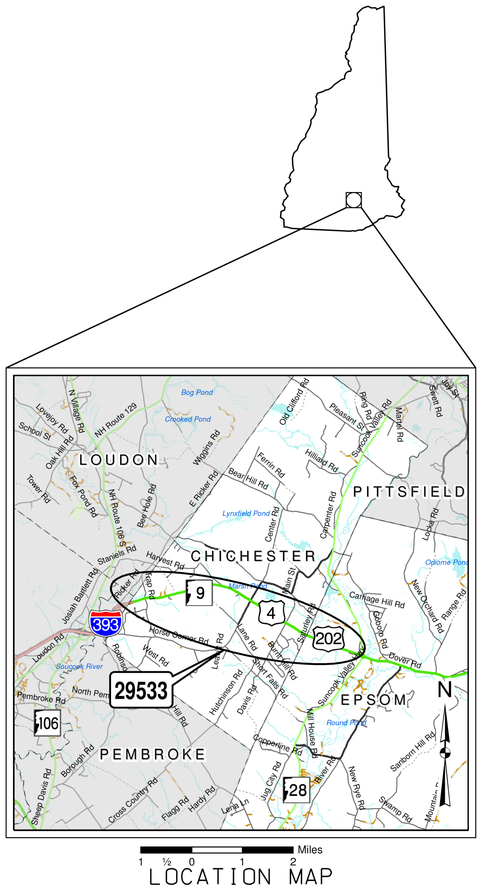

LOCATION MAP

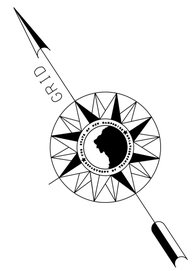

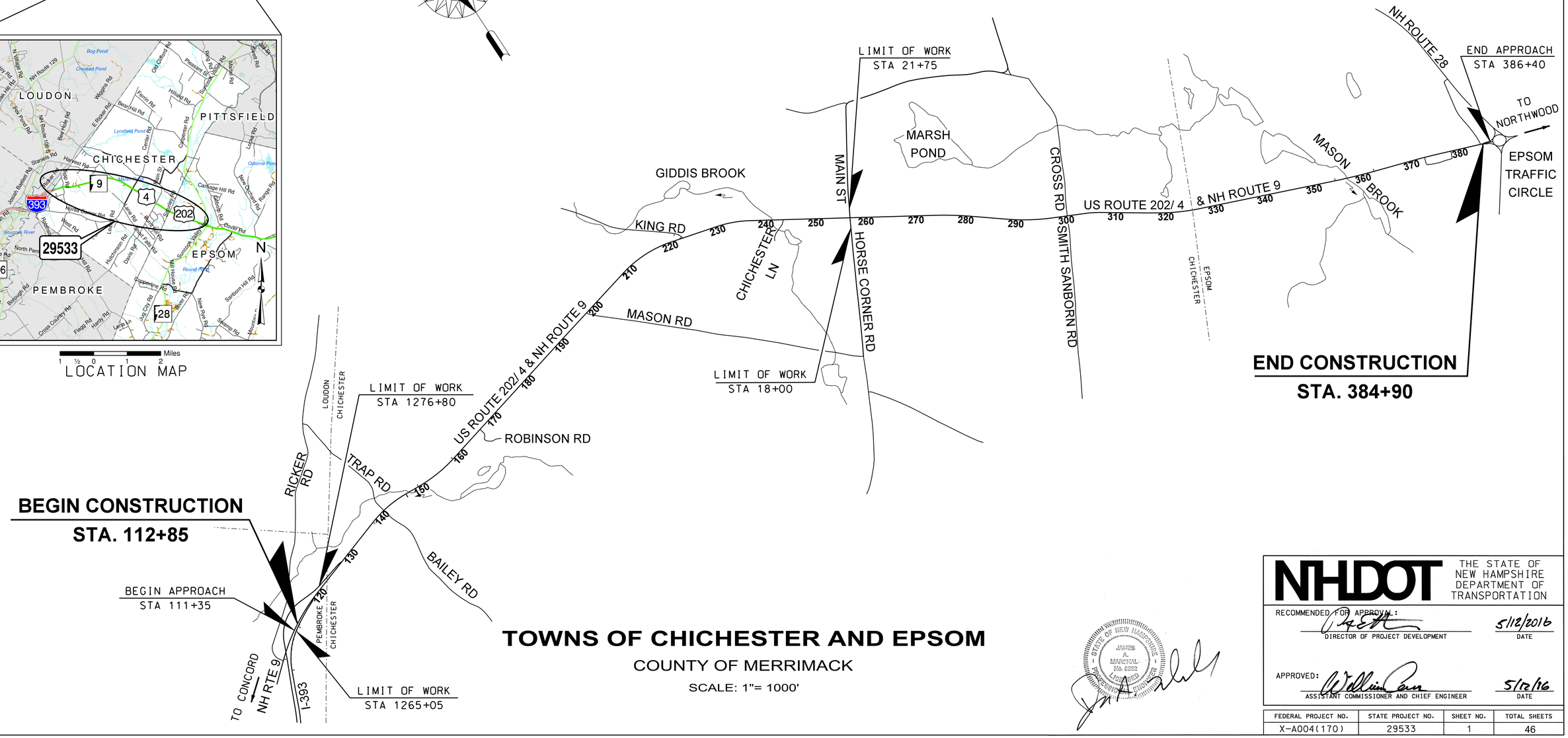

TOWNS OF CHICHESTER AND EPSOM

COUNTY OF MERRIMACK

SCALE: 1"= 1000'

DRAWN BY M. TUTTLE	DATE 9/20/15	
CHECKED BY S. MICUCCI	DATE 05/2016	

NHDOT THE STATE OF NEW HAMPSHIRE DEPARTMENT OF TRANSPORTATION

RECOMMENDED FOR APPROVAL: DIRECTOR OF PROJECT DEVELOPMENT — DATE 5/12/2016

APPROVED: ASSISTANT COMMISSIONER AND CHIEF ENGINEER — DATE 5/12/16

STATE OF NEW HAMPSHIRE JAMES A. MARSHALL No. 8282 LICENSED PROFESSIONAL ENGINEER

FEDERAL PROJECT NO.	STATE PROJECT NO.	SHEET NO.	TOTAL SHEETS
X-A004(170)	29533	1	46

INDEX OF SHEETS

SHEET NO.	DESCRIPTION
1	TITLE PAGE
2	INDEX OF SHEETS AND GENERAL NOTES
3,4	STANDARD SYMBOLS
5-10	US ROUTE 202/ 4 & NH ROUTE 9 TYPICAL SECTIONS OF IMPROVEMENT
11-13	SUMMARY OF QUANTITIES
	SPECIAL USE PLANS
14-18	SIGN TEXT LAYOUT
19	PAVEMENT MATCH DETAILS
20	DRAINAGE NOTES AND DETAILS
21	SIDEWALK CURB RAMPS WITH DETECABLE WARNINGS
22	PREFERRED PLATFORM FOR ENERGY ABSORBING GUARDRAIL TERMINAL (EAGRT)
23	PREFERRED PLATFORM FOR OFFSET ENERGY ABSORBING GUARDRAIL TERMINAL (EAGRT)
24	RESET BLOCK & RAIL (WOOD POST & WOOD BLOCK-OUT)
25	TERMINAL UNIT DELINEATION
	ROADWAY PLANS
26-46	GENERAL PLANS

GENERAL NOTES

1. FOR STANDARD PLANS, SEE "STANDARD PLANS FOR ROAD CONSTRUCTION" (AVAILABLE ON LINE UNDER 'DOING BUSINESS WITH DOT/ CONTRACTORS' AT WWW.NHDOT.GOV).
2. HIGH TENSION OVERHEAD TRANSMISSION LINES ARE LOCATED THROUGHOUT THE PROJECT WITH CROSSINGS AT VARIOUS LOCATIONS AND RUNNING ALONG THE ROAD THROUGHOUT THE PROJECT EVEN ON REGULAR POLES. THE CONTRACTOR IS ADVISED THAT EXTREME CAUTION WILL BE REQUIRED IN THE OPERATION OF EQUIPMENT, ESPECIALLY CRANES AND PILE DRIVING EQUIPMENT.
3. MODIFY SUPERELEVATION ON EXISTING CURVES BY THE USE OF A LEVELING COURSE TO THE RATES INDICATED ON THE PLANS OR AS ORDERED.
4. EXISTING DELINEATORS AND WITNESS MARKERS THAT ARE REMOVED AND DETERMINED BY THE ENGINEER TO BE IN ACCEPTABLE CONDITION SHALL BE RESET (SUBSIDIARY). ADDITIONAL DELINEATORS AND WITNESS MARKERS ORDERED WILL BE PAID UNDER THE APPROPRIATE ITEMS OF THE CONTRACT.
5. NO EXISTING MONUMENTS, BOUNDS, OR BENCHMARKS SHALL BE DISTURBED WITHOUT FIRST MAKING PROVISIONS FOR RELOCATION.
6. PERFORM ALL WORK WITHIN THE EXISTING RIGHT-OF-WAY, UNLESS OTHERWISE SHOWN ON THE PLANS OR AS ORDERED BY THE ENGINEER.
7. REMOVE UNPROTECTED PROJECT MARKERS (SUBSIDIARY).
8. SURVEY DATA FOR THIS PROJECT WAS COLLECTED BY SDR AND THE FIELD NOTES CAN BE FOUND IN THE FIELD BOOK 12470. COORDINATES ARE NEW HAMPSHIRE STATE PLANE COORDINATES OF NAD83, 1986 ADJUSTMENT AND THE BEARINGS ARE GRID. ELEVATIONS ARE REFERENCED TO NGVD 1929.
9. QUANTITIES FOR EMBANKMENT AND EXCAVATION FOR SLOPE ROUNDINGS AS SHOWN ON THE TYPICALS HAVE NOT BEEN CALCULATED AND ARE NOT INCLUDED IN THE QUANTITY SUMMARIES, AND ARE CONSIDERED SUBSIDIARY TO THE APPROPRIATE 203 ITEMS.

THE FOLLOWING GENERAL NOTES WILL BE USED ON THIS PROJECT:

1			4	5	6		8				

STATE OF NEW HAMPSHIRE

DEPARTMENT OF TRANSPORTATION ∘ BUREAU OF HIGHWAY DESIGN

INDEX OF SHEETS AND GENERAL NOTES

REVISION DATE	DGN	STATE PROJECT NO.	SHEET NO.	TOTAL SHEETS
11-21-14	29533_index	29533	2	46

GENERAL

EDGE OF PAVEMENT — PROPOSED ROADWAY
TRAVELED WAY — existing roadway — (pavement removed outside slope lines)

DRIVEWAYS — (label surface type)

BUILDINGS — (building to be removed) — (label house or type of building)

FOUNDATION — (label type)

LEACH FIELD — leach field

BRIDGE CROSSINGS — STREAM — OVERPASS

STEPS AND WALK — (label type)

INTERMITTENT WATER COURSE

SHORE LINE — river/stream — pond — (label name of water body)

POTENTIAL WET AREA SYMBOL

BRUSH OR WOODS LINE

TREES (PLANS) — (deciduous)(coniferous) (stump)

TREE OR STUMP (CROSS-SECTIONS) — (show station, circumference in feet & type)

HEDGE — (label type)

MONITORING WELL — mon W

WELL — W

FLAG POLE — fp

ORIGINAL GROUND (TYPICALS)

ROCK OUTCROP

ROCK LINE (TYPICALS & SECTIONS ONLY)

GUARDRAIL (label type) — existing — PROPOSED — bgr — cgr

JERSEY BARRIER

CURB (LABEL TYPE)

STONE WALL

RETAINING WALL (LABEL TYPE) — (points toward retained ground)

FENCE (LABEL TYPE)

SIGNS — (single post) — (double post)

GAS PUMP — gp

FUEL TANK (ABOVE GROUND) — ft — (label size & type)

STORAGE TANK FILLER CAP — fc

SEPTIC TANK — S

GRAVE — gr

MAILBOX — mb

VENT PIPE — vp

SATELLITE DISH ANTENNA — da

PHONE — ph

GROUND LIGHT/LAMP POST — gl — lp

BORING LOCATION — B

TEST PIT — TP

INTERSTATE NUMBERED HIGHWAY — 293

UNITED STATES NUMBERED HIGHWAY — 3

STATE NUMBERED HIGHWAY — 102

SHORELAND - WETLAND

WETLAND DESIGNATION AND TYPE — 2 PUB2E

DELINEATED WETLAND — DW
ORDINARY HIGH WATER — OHW
TOP OF BANK — TOB
TOP OF BANK & ORDINARY HIGH WATER — TOBOHW
NORMAL HIGH WATER — NHW
WIDTH AT BANK FULL — WBF
PRIME WETLAND — PWET
PRIME WETLAND 100' BUFFER — PWET100
NON-JURISDICTIONAL DRAINAGE AREA — NJDA
COWARDIN DISTINCTION LINE — CDL
TIDAL BUFFER ZONE — TBZ
DEVELOPED TIDAL BUFFER ZONE — DTBZ
HIGHEST OBSERVABLE TIDE LINE — HOTL
MEAN HIGH WATER — MHW
MEAN LOW WATER — MLW
VERNAL POOL — VP
SPECIAL AQUATIC SITE — SAS
REFERENCE LINE — REF
WATER FRONT BUFFER — WB50
NATURAL WOODLAND BUFFER — NWB150
PROTECTED SHORELAND — PS250
INVASIVE SPECIES LABEL — I.S. I — I.S. II
INVASIVE SPECIES — INV

FLOODPLAIN / FLOODWAY

500 YEAR FLOODPLAIN BOUNDARY — FP500
100 YEAR FLOODPLAIN BOUNDARY — FP100
FLOODWAY — FW

ENGINEERING

CONSTRUCTION BASELINE — 30 — 31 — 32

PC, PT, POT (ON CONST BASELINE)

PI (IN CONSTRUCTION BASELINES)

INTERSECTION OR EQUATION OF TWO LINES

ORIGINAL GROUND LINE (PROFILES AND CROSS-SECTIONS)

PROFILE GRADE LINE (PROFILES AND CROSS-SECTIONS)

CLEARING LINE — SLOPE LINE

SLOPE LINE

SLOPE LINE (FILL)

SLOPE LINE (CUT)

PROFILES AND CROSS SECTIONS:
ORIGINAL GROUND ELEVATION (LEFT) — 72.5
FINISHED GRADE ELEVATION (RIGHT) — 79.14

SHEET 1 OF 2

STATE OF NEW HAMPSHIRE
DEPARTMENT OF TRANSPORTATION ∘ BUREAU OF HIGHWAY DESIGN

STANDARD SYMBOLS

REVISION DATE	DGN	STATE PROJECT NO.	SHEET NO.	TOTAL SHEETS
11-21-2014	stdsymb1_2	29533	3	46

"n34clb"

DRAINAGE

MANHOLE
CATCH BASIN — cb — (existing) — (PROPOSED)
DROP INLET — di
DRAINAGE PIPE (existing) — (label size & type)
DRAINAGE PIPE (PROPOSED)
UNDERDRAIN (existing) W/ FLUSHING BASIN — fb — (label size & type)
UNDERDRAIN (PROPOSED) W/ FLUSHING BASIN
show direction of flow
HEADER (existing & PROPOSED) — (with stone outlet protection)
END SECTION (existing & PROPOSED) — METAL or PLASTIC — RCP
OPEN DITCH (PROPOSED)
EROSION CONTROL/ STONE SLOPE PROTECTION

BOUNDARIES / RIGHT-OF-WAY

RIGHT-OF-WAY LINE — (label type)
RR RIGHT-OF-WAY LINE
PROPERTY LINE
PROPERTY LINE (COMMON OWNER) — Z
TOWN LINE — BOW / CONCORD
COUNTY LINE — COOS / GRAFTON
STATE LINE — MAINE / NEW HAMPSHIRE
NATIONAL FOREST
CONSERVATION LAND — LC
BENCH MARK / SURVEY DISK
BOUND — bnd — (PROPOSED)
STATE LINE/ TOWN LINE MONUMENT — S/L — T/L
NHDOT PROJECT MARKER
IRON PIPE OR PIN — ip
DRILL HOLE IN ROCK — dh
TAX MAP AND LOT NUMBER — 156 / 14 — 1642/341 — 6.80 Ac.±
PROPERTY PARCEL NUMBER — 12
HISTORIC PROPERTY

UTILITIES

existing — PROPOSED

TELEPHONE POLE
POWER POLE
JOINT OCCUPANCY
MISCELLANEOUS/UNKNOWN POLE
GUY POLE OR PUSH BRACE
(plot point at face not center of symbol)
LIGHT POLE
LIGHT ON POWER POLE
LIGHT ON JOINT POLE

POLE STATUS:
REMOVE, LEAVE, PROPOSED, OR TEMPORARY AS APPLICABLE e.g.: R, L, P+04 25.0', T+04 25.0'

RAILROAD — (label ownership)
RAILROAD SIGN
RAILROAD SIGNAL
UTILITY JUNCTION BOX — jb — JB
OVERHEAD ELECTRIC — OE

UNDERGROUND UTILITIES

WATER (on existing lines label size, type and note if abandoned) — W — PW
SEWER — S — PS
TELEPHONE — T — PT
ELECTRIC — E — PE
GAS — G — PG
LIGHTING — L — PL
INTELLIGENT TRANSPORTATION SYSTEM — ITS — PITS
FIBER OPTIC — FO — PFO
WATER SHUT OFF — WSO
GAS SHUT OFF — GSO
HYDRANT — hyd — HYD

MANHOLES

SEWER — MHS
TELEPHONE — MHT
ELECTRICAL — MHE
GAS — MHG
UNKNOWN

TRAFFIC SIGNALS / ITS

existing — PROPOSED

MAST ARM (existing) — 30' MA (NOTE ANGLE FROM ℄)
OPTICOM RECEIVER
OPTICOM STROBE
TRAFFIC SIGNAL
PEDESTAL WITH PEDESTRIAN SIGNAL HEADS AND PUSH BUTTON UNIT
SIGNAL CONDUIT — C — PC
CONTROLLER CABINET — cc — CC
METER PEDESTAL — mp — MP
PULL BOX — pb — PB
LOOP DETECTOR (QUADRUPOLE) — (label size)
LOOP DETECTOR (RECTANGULAR) — (label size)
CAMERA POLE (CCTV)
FIBER OPTIC DELINEATOR — fod — FOD
FIBER OPTIC SPLICE VAULT — SVF
ITS EQUIPMENT CABINET — its — ITS
VARIABLE SPEED LIMIT SIGN
DYNAMIC MESSAGE SIGN
ROAD AND WEATHER INFO SYSTEM

CONSTRUCTION NOTES

CURB MARK NUMBER - BITUMINOUS — B-1
CURB MARK NUMBER - GRANITE — G-1
CLEARING AND GRUBBING AREA — A
DRAINAGE NOTE — 1
EROSION CONTROL NOTE — A
FENCING NOTE — A
GUARDRAIL NOTE — 1
ITS NOTE — 1
LIGHTING NOTE — A
TRAFFIC SIGNAL NOTE — 1

SHEET 2 OF 2

STATE OF NEW HAMPSHIRE
DEPARTMENT OF TRANSPORTATION ∘ BUREAU OF HIGHWAY DESIGN

STANDARD SYMBOLS

REVISION DATE	DGN	STATE PROJECT NO.	SHEET NO.	TOTAL SHEETS
11-21-2014	stdsymb1_2	29533	4	46

"n34clb"

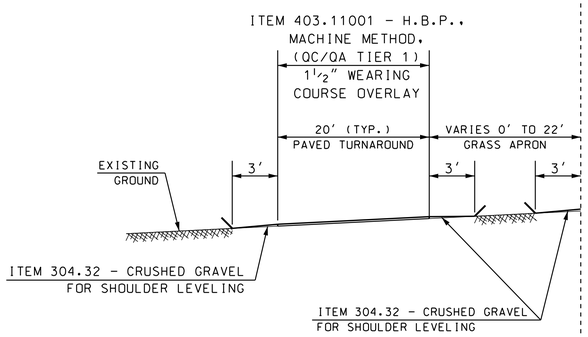

STA. 128+26 - 129+77 LT

(TURN AROUND)

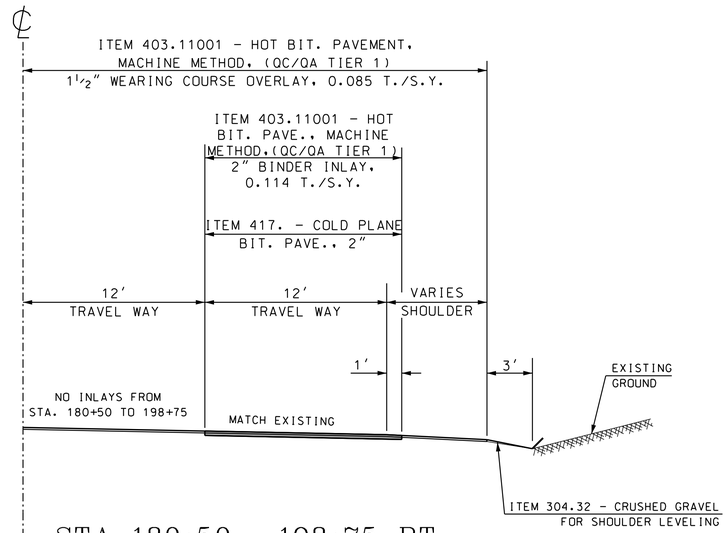

STA. 180+50 - 198+75 RT

NO INLAYS (FULL WIDTH):

STA. 112+85 - 127+50 LT/RT
STA. 127+50 - 198+75 LT
STA. 198+75 - 211+50 LT/RT

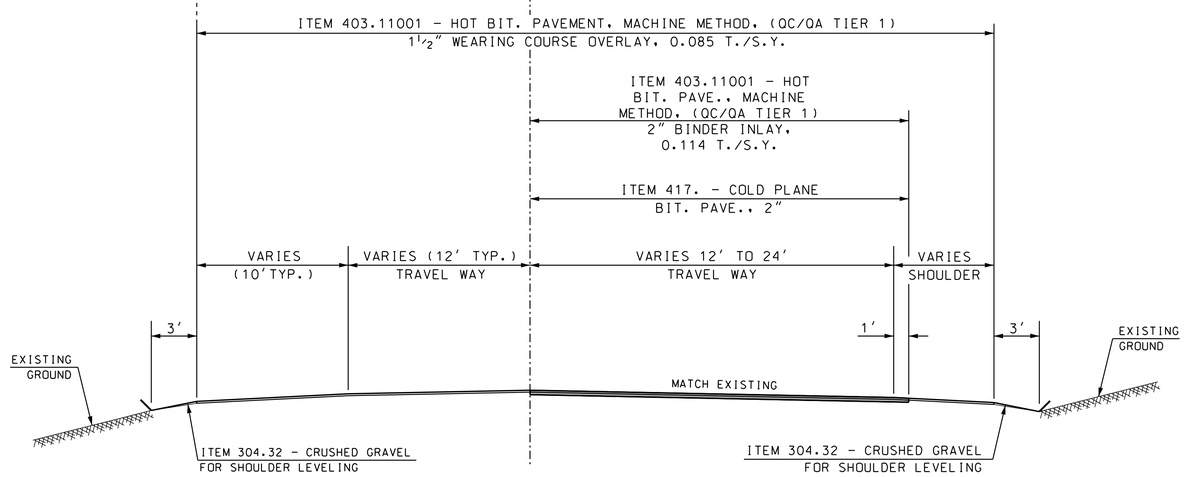

STA. 127+50 - 180+50

GENERAL NOTES:

1. LOCATIONS OF INLAY SECTIONS ARE FOR INFORMATIONAL PURPOSES ONLY AND SHOULD BE VERIFIED IN THE FIELD, PARTICULARLY WHEN MATCHING NEW INLAY SECTIONS TO EXISTING INLAY SECTIONS.
2. USE LEVEL 1 RIDE QUALITY FOR ITEM 403.11001 - HOT BITUMINOUS PAVEMENT, MACHINE METHOD (QC/QA TIER 1).
3. APPLY ITEM 403.6 - PAVEMENT JOINT ADHESIVE TO LONGITUDINAL JOINTS ASSOCIATED WITH ALL PAVEMENT LAYERS, INCLUDING THE LONGITUDINAL MILLED JOINTS ASSOCIATED WITH THE TRAVEL WAY INLAY WORK.
4. USE ITEM 403.4 - MATERIAL TRANSFER VEHICLE FOR BINDER AND WEARING COURSE PAVEMENT.
5. USE ITEM 410.22 - ASPHALT EMULSION FOR TACK COAT BETWEEN LAYERS OF PAVEMENT.

NOT TO SCALE

STATE OF NEW HAMPSHIRE

DEPARTMENT OF TRANSPORTATION ∘ BUREAU OF HIGHWAY DESIGN

US ROUTE 202/4 & NH ROUTE 9
TYP. SECTIONS OF IMPROVEMENT

PAGE	DGN	STATE PROJECT NO.	SHEET NO.	TOTAL SHEETS
1 OF 6	29533TYP	29533	5	46

REVISIONS AFTER PROPOSAL

NUMBER	DATE	STATION	STATION	DESCRIPTION

		DATE
SOR PROCESSED		
NEW DESIGN	T. RUSSO	DATE 5/2016
SHEET CHECKED	C. BURNS	DATE 5/2016
AS BUILT DETAILS		DATE

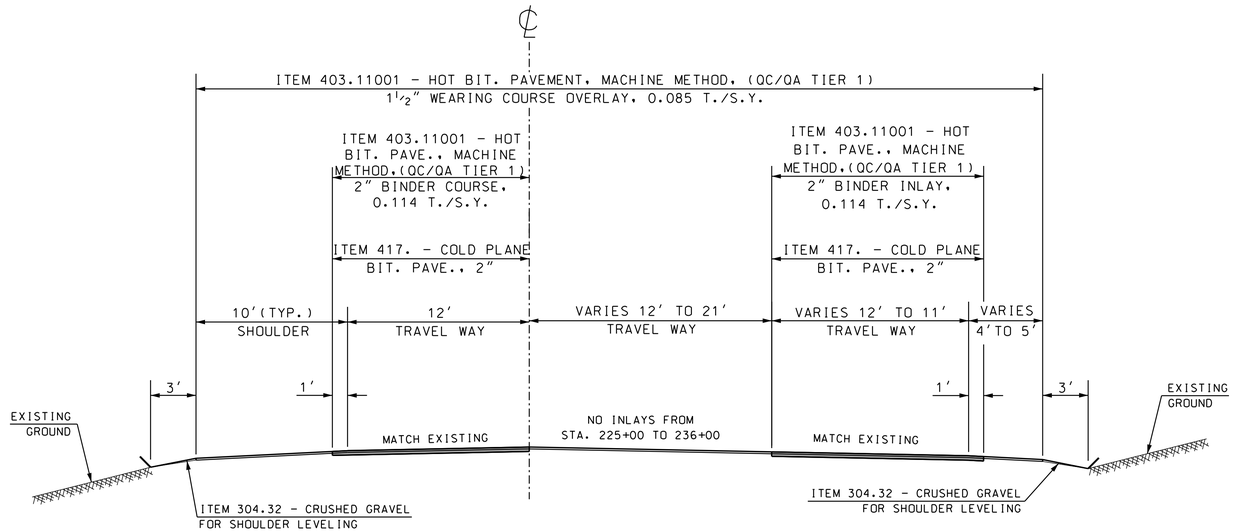

STA. 225+00 - 236+00

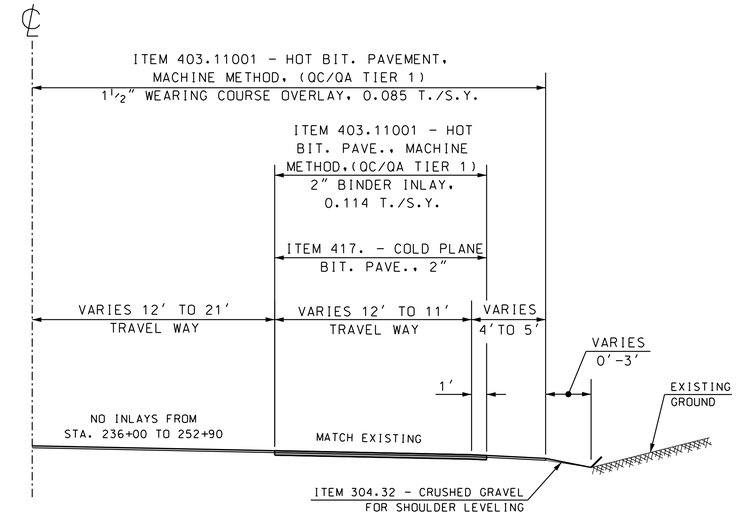

STA. 236+00 - 252+90 RT

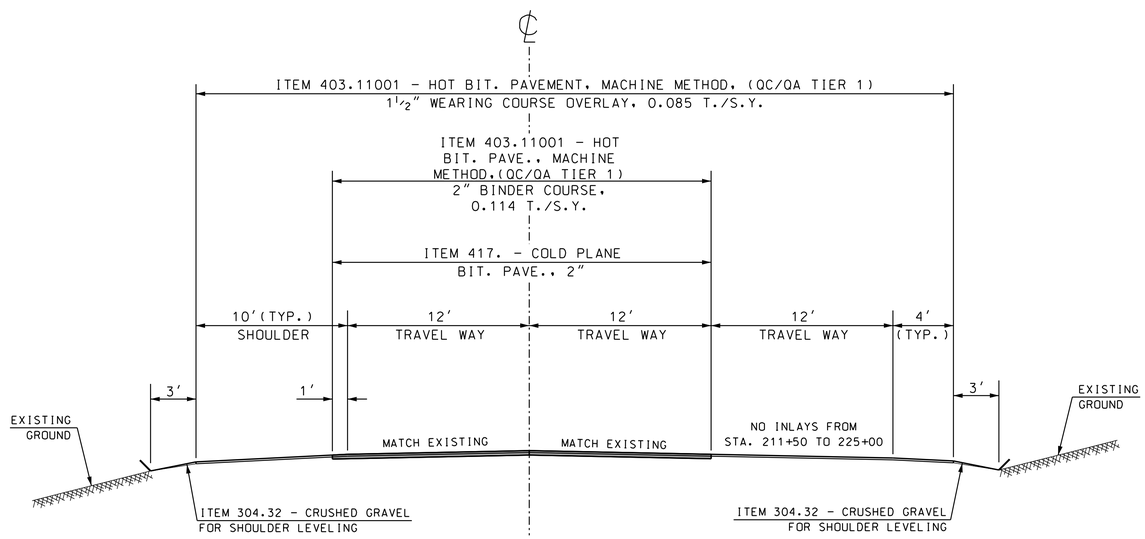

STA. 211+50 - 225+00

NO INLAYS (FULL WIDTH):

STA. 198+75 - 211+50 LT/RT
STA. 236+00 - 252+90 LT

GENERAL NOTES:

1. LOCATIONS OF INLAY SECTIONS ARE FOR INFORMATIONAL PURPOSES ONLY AND SHOULD BE VERIFIED IN THE FIELD, PARTICULARLY WHEN MATCHING NEW INLAY SECTIONS TO EXISTING INLAY SECTIONS.
2. USE LEVEL 1 RIDE QUALITY FOR ITEM 403.11001 - HOT BITUMINOUS PAVEMENT, MACHINE METHOD (QC/QA TIER 1).
3. APPLY ITEM 403.6 - PAVEMENT JOINT ADHESIVE TO LONGITUDINAL JOINTS ASSOCIATED WITH ALL PAVEMENT LAYERS, INCLUDING THE LONGITUDINAL MILLED JOINTS ASSOCIATED WITH THE TRAVEL WAY INLAY WORK.
4. USE ITEM 403.4 - MATERIAL TRANSFER VEHICLE FOR BINDER AND WEARING COURSE PAVEMENT.
5. USE ITEM 410.22 - ASPHALT EMULSION FOR TACK COAT BETWEEN LAYERS OF PAVEMENT.

NOT TO SCALE

STATE OF NEW HAMPSHIRE
DEPARTMENT OF TRANSPORTATION ∘ BUREAU OF HIGHWAY DESIGN

US ROUTE 202/4 & NH ROUTE 9
TYP. SECTIONS OF IMPROVEMENT

PAGE	DGN	STATE PROJECT NO.	SHEET NO.	TOTAL SHEETS
2 OF 6	29533TYP	29533	6	46

NUMBER	DATE	STATION	DESCRIPTION

REVISIONS AFTER PROPOSAL

		DATE
SDR PROCESSED		
NEW DESIGN	T. RUSSO	DATE 5/2016
SHEET CHECKED	C. BURNS	DATE 5/2016
AS BUILT DETAILS		DATE

"rp34clb"

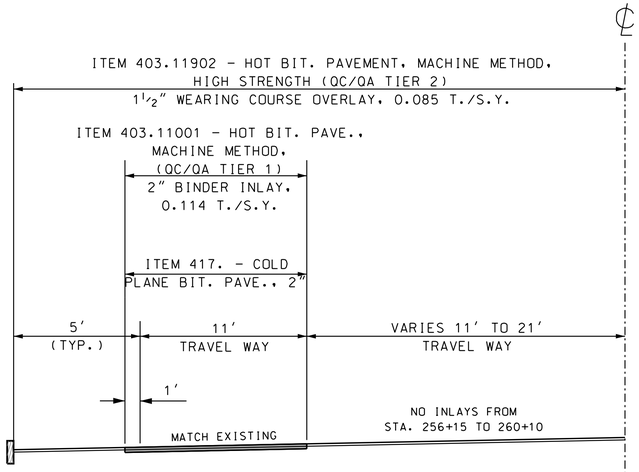

STA. 256+15 - 260+10 LT

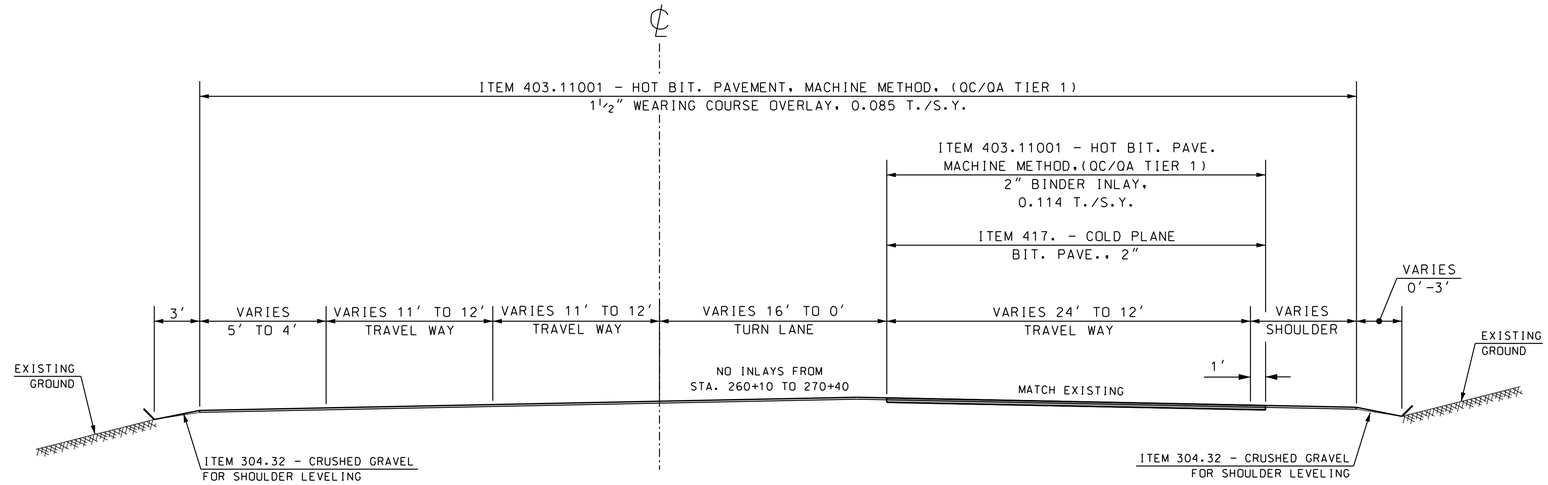

STA. 260+10 - 270+40

NO INLAYS (FULL WIDTH):

STA. 236+00 - 256+15 LT
STA. 260+10 - 270+40 LT

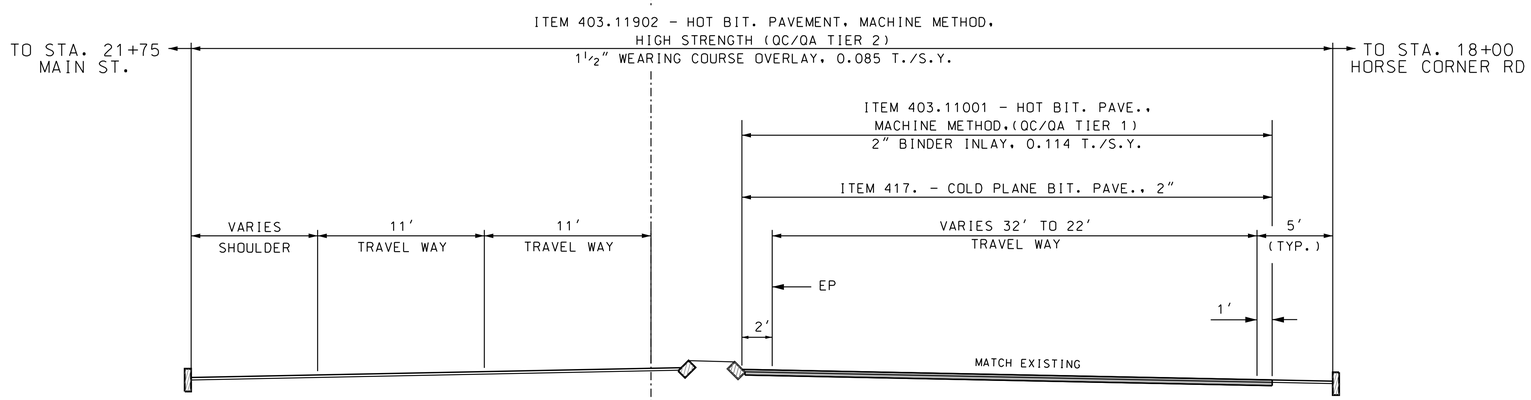

STA. 252+90 - 260+10

GENERAL NOTES:

1. LOCATIONS OF INLAY SECTIONS ARE FOR INFORMATIONAL PURPOSES ONLY AND SHOULD BE VERIFIED IN THE FIELD, PARTICULARLY WHEN MATCHING NEW INLAY SECTIONS TO EXISTING INLAY SECTIONS.
2. USE LEVEL 1 RIDE QUALITY FOR ITEM 403.11001 - HOT BITUMINOUS PAVEMENT, MACHINE METHOD (QC/QA TIER 1).
3. APPLY ITEM 403.6 - PAVEMENT JOINT ADHESIVE TO LONGITUDINAL JOINTS ASSOCIATED WITH ALL PAVEMENT LAYERS, INCLUDING THE LONGITUDINAL MILLED JOINTS ASSOCIATED WITH THE TRAVEL WAY INLAY WORK.
4. USE ITEM 403.4 - MATERIAL TRANSFER VEHICLE FOR BINDER AND WEARING COURSE PAVEMENT.
5. USE ITEM 410.22 - ASPHALT EMULSION FOR TACK COAT BETWEEN LAYERS OF PAVEMENT.

NOT TO SCALE

STATE OF NEW HAMPSHIRE
DEPARTMENT OF TRANSPORTATION ∘ BUREAU OF HIGHWAY DESIGN

US ROUTE 202/4 & NH ROUTE 9
TYP. SECTIONS OF IMPROVEMENT

PAGE	DGN	STATE PROJECT NO.	SHEET NO.	TOTAL SHEETS
3 OF 6	29533TYP	29533	7	46

REVISIONS AFTER PROPOSAL			
NUMBER	DATE	STATION	DESCRIPTION

SDR PROCESSED		DATE	
NEW DESIGN	T. RUSSO	DATE	5/2016
SHEET CHECKED	C. BURNS	DATE	5/2016
AS BUILT DETAILS		DATE	

REVISIONS AFTER PROPOSAL			
NUMBER	DATE	STATION	STATION	DESCRIPTION

SDR PROCESSED		DATE
NEW DESIGN	T. RUSSO	DATE 5/2016
SHEET CHECKED	C. BURNS	DATE 5/2016
AS BUILT DETAILS		DATE

NO INLAYS (FULL WIDTH):

STA. 260+10 - 270+40 LT
STA. 280+50 - 337+00 RT

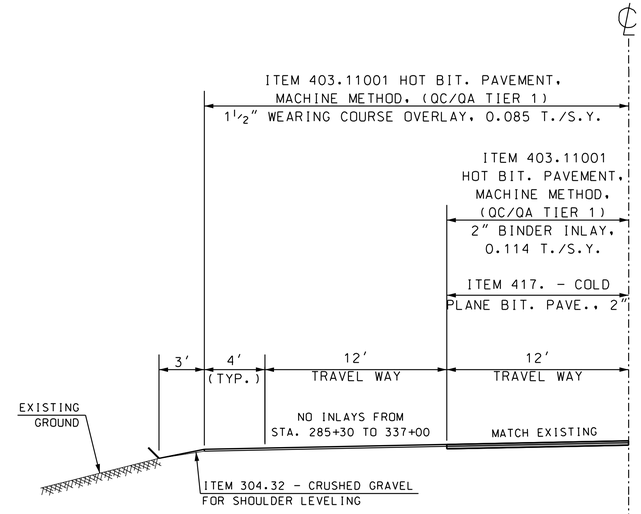

STA. 285+30 - 337+00 LT

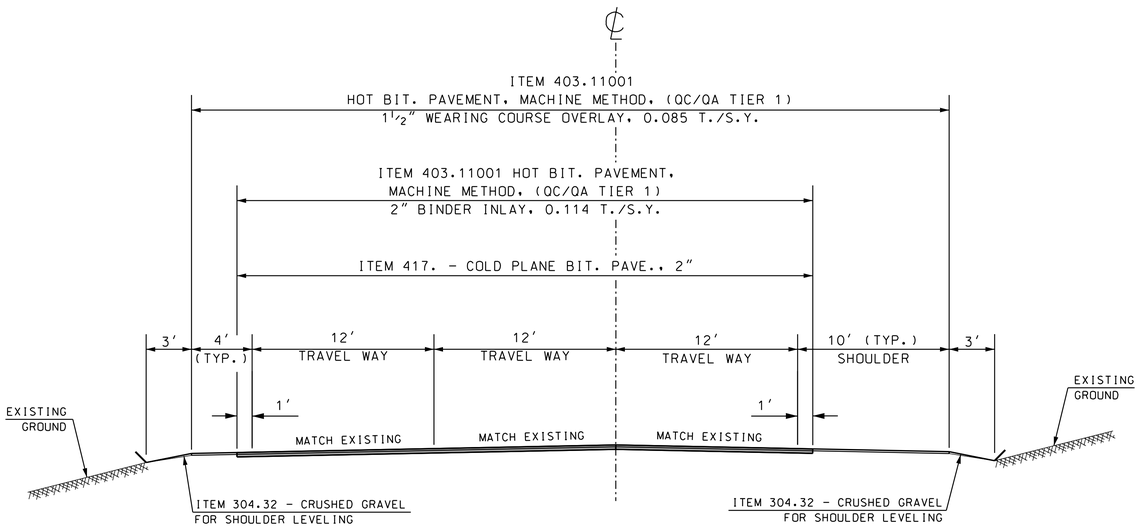

STA. 270+40 - 280+50

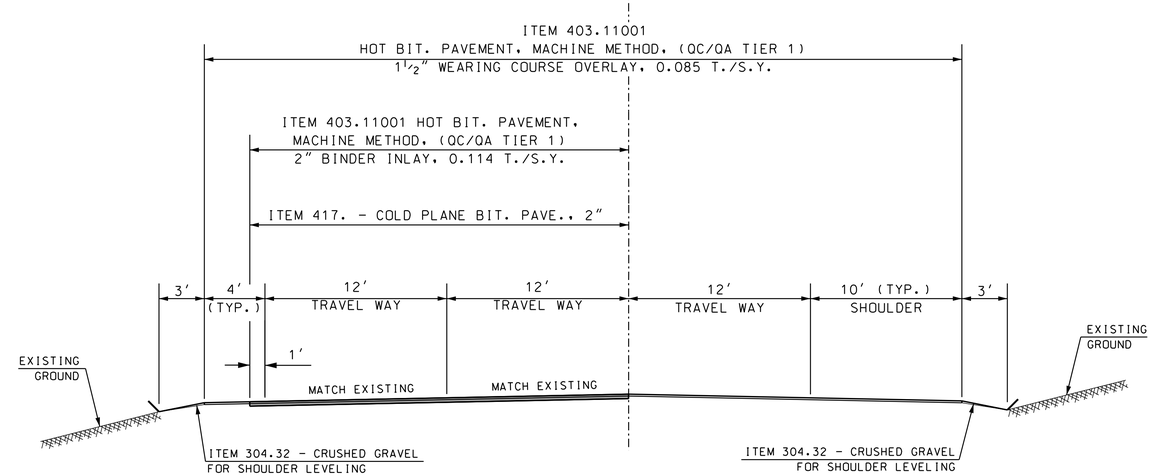

STA. 280+50 - 285+30

GENERAL NOTES:

1. LOCATIONS OF INLAY SECTIONS ARE FOR INFORMATIONAL PURPOSES ONLY AND SHOULD BE VERIFIED IN THE FIELD, PARTICULARLY WHEN MATCHING NEW INLAY SECTIONS TO EXISTING INLAY SECTIONS.

2. USE LEVEL 1 RIDE QUALITY FOR ITEM 403.11001 - HOT BITUMINOUS PAVEMENT, MACHINE METHOD (QC/QA TIER 1).

3. APPLY ITEM 403.6 - PAVEMENT JOINT ADHESIVE TO LONGITUDINAL JOINTS ASSOCIATED WITH ALL PAVEMENT LAYERS, INCLUDING THE LONGITUDINAL MILLED JOINTS ASSOCIATED WITH THE TRAVEL WAY INLAY WORK.

4. USE ITEM 403.4 - MATERIAL TRANSFER VEHICLE FOR BINDER AND WEARING COURSE PAVEMENT.

5. USE ITEM 410.22 - ASPHALT EMULSION FOR TACK COAT BETWEEN LAYERS OF PAVEMENT.

NOT TO SCALE

STATE OF NEW HAMPSHIRE

DEPARTMENT OF TRANSPORTATION ∘ BUREAU OF HIGHWAY DESIGN

US ROUTE 202/4 & NH ROUTE 9
TYP. SECTIONS OF IMPROVEMENT

PAGE	DGN	STATE PROJECT NO.	SHEET NO.	TOTAL SHEETS
4 OF 6	29533TYP	29533	8	46

"n34clb"

NO INLAYS (FULL WIDTH):
STA. 280+50 - 337+00 RT
STA. 356+75 - 362+80 LT/RT

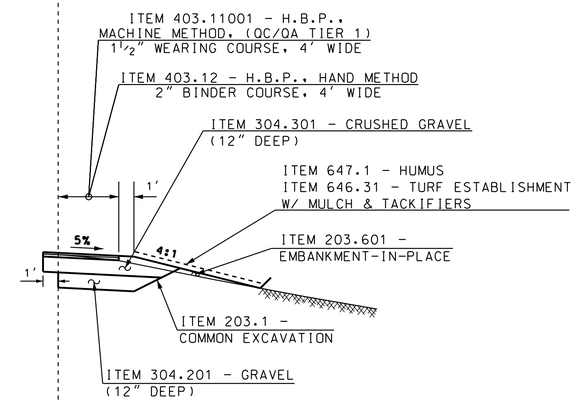

STA. 355+48 - 357+36 RT

(WIDENED SHOULDER)

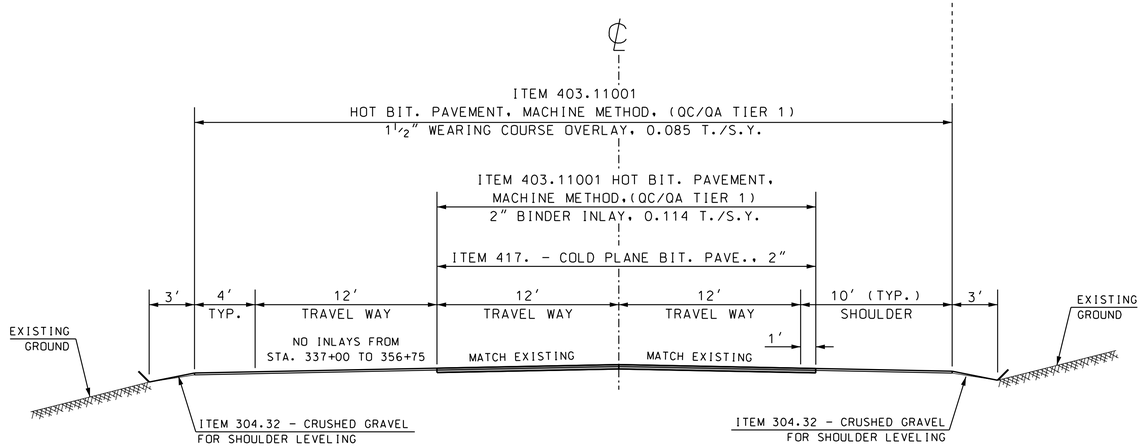

STA. 337+00 - 356+75

GENERAL NOTES:

1. LOCATIONS OF INLAY SECTIONS ARE FOR INFORMATIONAL PURPOSES ONLY AND SHOULD BE VERIFIED IN THE FIELD, PARTICULARLY WHEN MATCHING NEW INLAY SECTIONS TO EXISTING INLAY SECTIONS.
2. USE LEVEL 1 RIDE QUALITY FOR ITEM 403.11001 - HOT BITUMINOUS PAVEMENT, MACHINE METHOD (QC/QA TIER 1).
3. APPLY ITEM 403.6 - PAVEMENT JOINT ADHESIVE TO LONGITUDINAL JOINTS ASSOCIATED WITH ALL PAVEMENT LAYERS, INCLUDING THE LONGITUDINAL MILLED JOINTS ASSOCIATED WITH THE TRAVEL WAY INLAY WORK.
4. USE ITEM 403.4 - MATERIAL TRANSFER VEHICLE FOR BINDER AND WEARING COURSE PAVEMENT.
5. USE ITEM 410.22 - ASPHALT EMULSION FOR TACK COAT BETWEEN LAYERS OF PAVEMENT.

NOT TO SCALE

STATE OF NEW HAMPSHIRE

DEPARTMENT OF TRANSPORTATION ∘ BUREAU OF HIGHWAY DESIGN

US ROUTE 202/4 & NH ROUTE 9
TYP. SECTIONS OF IMPROVEMENT

PAGE	DGN	STATE PROJECT NO.	SHEET NO.	TOTAL SHEETS
5 OF 6	29533TYP	29533	9	46

REVISIONS AFTER PROPOSAL

NUMBER	DATE	STATION	STATION	DESCRIPTION

		DATE
SDR PROCESSED		
NEW DESIGN	T. RUSSO	DATE 5/2016
SHEET CHECKED	C. BURNS	DATE 5/2016
AS BUILT DETAILS		DATE

"n34clb"

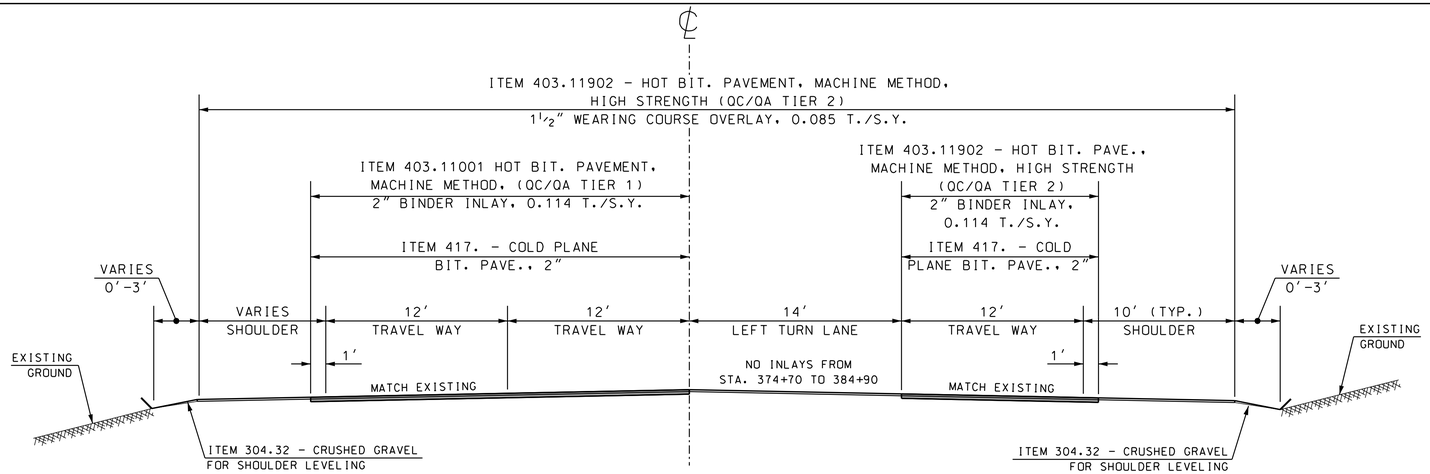

STA. 374+70 - 384+90

NO INLAYS (FULL WIDTH):

STA. 356+75 - 362+80 LT/RT
STA. 362+80 - 374+70 RT

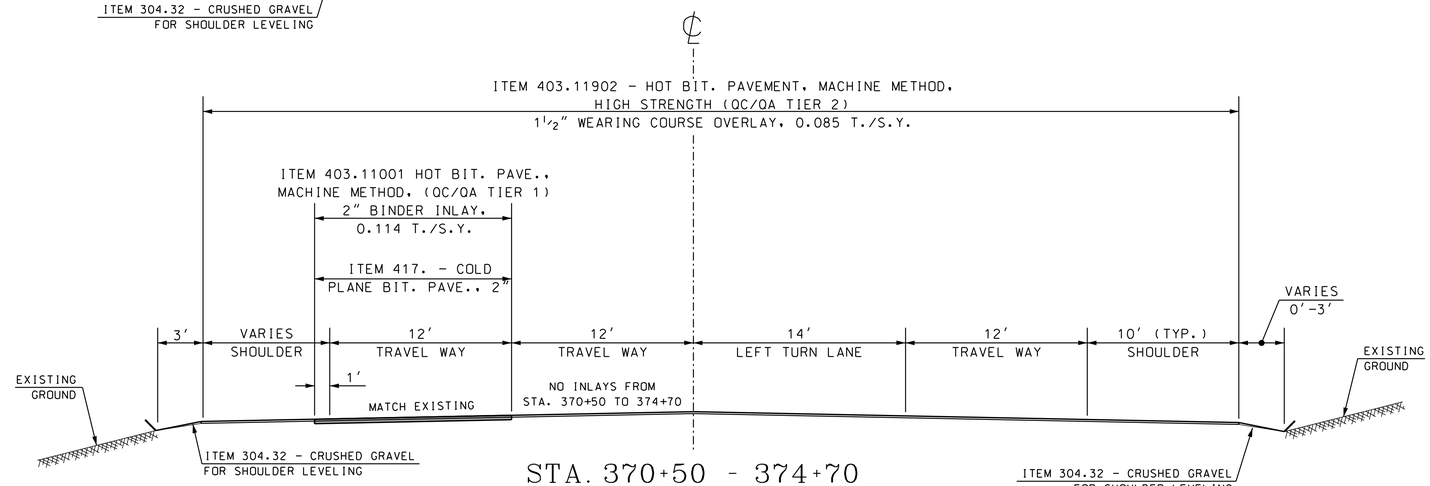

STA. 370+50 - 374+70

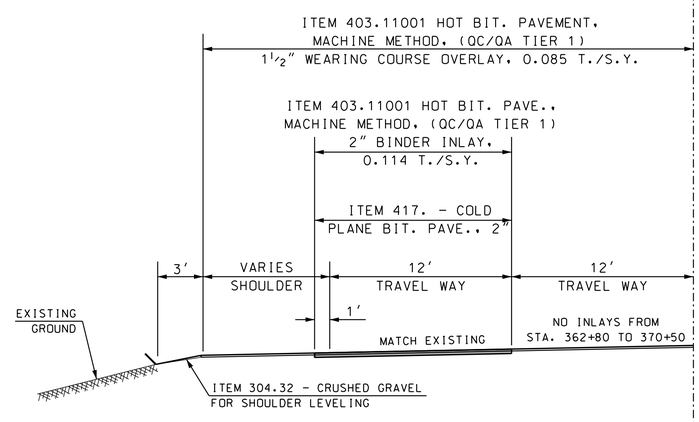

STA. 362+80 - 370+50 LT

GENERAL NOTES:

1. USE ITEM 403.11902 - HOT BITUMINOUS PAVEMENT, MACHINE METHOD, HIGH STRENGTH, (QC/QA TIER 2) 1½" WEARING COURSE FULL WIDTH OVERLAY FROM STA. 370+50 TO 386+40.
2. USE ITEM 403.11902 - HOT BITUMINOUS PAVEMENT, MACHINE METHOD, HIGH STRENGTH, (QC/QA TIER 2) 2" BINDER COURSE INLAY ONLY IN THE EASTBOUND TRAVEL LANE FROM STA. 374+70 TO 384+90.
3. LOCATIONS OF INLAY SECTIONS ARE FOR INFORMATIONAL PURPOSES ONLY AND SHOULD BE VERIFIED IN THE FIELD, PARTICULARLY WHEN MATCHING NEW INLAY SECTIONS TO EXISTING INLAY SECTIONS.
4. USE LEVEL 1 RIDE QUALITY FOR ITEM 403.11001 - HOT BITUMINOUS PAVEMENT, MACHINE METHOD (QC/QA TIER 1).
5. APPLY ITEM 403.6 - PAVEMENT JOINT ADHESIVE TO LONGITUDINAL JOINTS ASSOCIATED WITH ALL PAVEMENT LAYERS, INCLUDING THE LONGITUDINAL MILLED JOINTS ASSOCIATED WITH THE TRAVEL WAY INLAY WORK.
6. USE ITEM 403.4 - MATERIAL TRANSFER VEHICLE FOR BINDER AND WEARING COURSE PAVEMENT.
7. USE ITEM 410.22 - ASPHALT EMULSION FOR TACK COAT BETWEEN LAYERS OF PAVEMENT.

NOT TO SCALE

REVISIONS AFTER PROPOSAL			
NUMBER	DATE	STATION	STATION	DESCRIPTION

SDR PROCESSED		DATE
NEW DESIGN	T. RUSSO	DATE 5/2016
SHEET CHECKED	C. BURNS	DATE 5/2016
AS BUILT DETAILS		DATE

STATE OF NEW HAMPSHIRE

DEPARTMENT OF TRANSPORTATION ∘ BUREAU OF HIGHWAY DESIGN

US ROUTE 202/4 & NH ROUTE 9
TYP. SECTIONS OF IMPROVEMENT

PAGE	DGN	STATE PROJECT NO.	SHEET NO.	TOTAL SHEETS
6 OF 6	29533TYP	29533	10	46

"n34clb"

LANDSCAPING AND SLOPE PROTECTION

ITEM NO.	645.3	645.41	645.43	645.512	645.531	646.31	647.1
DESCRIPTION	EROSION STONE	TEMPORARY SLOPE STABILIZATION TYPE A	TEMPORARY SLOPE STABILIZATION TYPE C	COMPOST SILT SOCKS	SILT FENCE	TURF ESTABLISHMENT WITH MULCH AND TACKIFIERS	HUMUS
UNIT	TON	SY	SY	LF	LF	SY	CY
LOCATION							
DN 1				112	112		
DN 2				150	150		
DN 3				309	309		
TRUCK PULL-OFF					140		
NH ROUTE 4	131	525	1360			1907.00	185
GR 1					125		
GR 2					135		
SUBTOTAL	131	525	1360	571	971	1907	185
ROUNDING	19	25	40	9	29	93	15
TOTAL	150	550	1400	580	1000	2000	200

CLEARING

ITEM NO.		201.0101
DESCRIPTION		CLEARING
UNIT	SF	A
AREA DESIGNATION		
LOCATION		
A	4476	0.10
B	787	0.02
C	10532	0.24
D	1056	0.02
E	2122	0.05
F	2985	0.07
SUBTOTAL		0.50
ROUNDING		0.00
TOTAL		0.50

DRAINAGE

ITEM NO.	206.1	206.2	503.101	585.3	593.421	602.011	602.11036	603.00224	603.34115	604.0007	604.4	604.52	622.1	
DESCRIPTION	COMMON STRUCTURE EXCAVATION	ROCK STRUCTURE EXCAVATION	WATER DIVERSION STRUCTURES	CLASS C STONE	GEOTEXTILE, PERMANENT EROSION CONTROL CLASS 2, NON-WOVEN	FILL MATERIAL FOR ANNULAR SPACE	PE SOLID WALL LINER FOR 36" RCP	R.C. PIPE, 2000D 24"	15" STEEL END SECTIONS	POLYETHELYENE LINER	RECONSTRUCTURING/ADJUSTING CATCH BASIN & DROP INLET	RECONSTRUCTING / ADJUSTING DRAINAGE MANHOLES	STEEL WITNESS MARKERS	REMARKS
UNIT	CY	CY	U	CY	SY	CY	LF	LF	EA	U	LF	LF	EA	
DRAIN NOTE														
1	24.1			6.2	22.0			16.0	1.0				1.0	
2	77.9							8.0	1.0				1.0	
3	9.5		1.0	9.5	38.5	11.6	144.4						2.0	
R1		2.4												
R2		2.4												
R3		1.9												
PROJECT WIDE										34.0	34.0	15.0	20.0	
FROM SIDEWALK SUMMARY	8.6													
SUBTOTAL	120	7	1	16	61	12	144	24	2	34	34	15	24	
ROUNDING	10	3	0	4	10	3	6	8	0	0	0	0	1	
TOTAL	130	10	1	20	70	15	150	32	2	34	34	15	25	

INCIDENTAL ITEMS

ITEM NO.	DESCRIPTION	UNIT	TOTAL
201.881	INVASIVE SPECIES CONTROL TYPE I	SY	60
203.92	ROCK SCALING, MACHINE METHOD	HR	35
315.5	CRUSHED STONE (ENERGY-ABSORBING MATERIAL)	CY	85
606.9523	TEMP. IMPACT ATTENUATION DEVICE (NON-DIRECTIVE) TL 3	U	1
616.95	INSTALL TRAFFIC STUDY EQUIPMENT	U	1
618.61	UNIFORMED OFFICERS WITH VEHICLE	$	47,000
618.7	FLAGGERS	HR	1,000
619.1	MAINTENANCE OF TRAFFIC	U	1
619.25	PORTABLE CHANGEABLE MESSAGE SIGN	U	4
619.279	AUTOMATED TRAILER-MOUNTED SPEED LIMIT SIGN	U	4
645.7	STORM WATER POLLUTION PREVENTION PLAN	U	1
645.71	MONITORING SWPPP AND EROSION AND SEDIMENT CONTROLS	HR	75
670.104	TEMPORARY PORTABLE LIGHTING	U	1
692.	MOBILIZATION	U	1
697.11	INVASIVE SPECIES CONTROL AND MANAGEMENT PLAN	U	1
698.13	FIELD OFFICE TYPE C	MON	13
699.	MISCELLANEOUS TEMPORARY EROSION AND SEDIMENT CONTROL	$	5,000
1008.11	ALTERATIONS AND ADDITIONS AS NEEDED - UNANTICIPATED WORK	$	1,000
1010.15	FUEL ADJUSTMENT	$	20,000
1010.2	ASPHALT CEMENT ADJUSTMENT	$	50,000
1010.3	QUALITY CONTROL QUALITY ASSURANCE (QC/QA) ASPHALT	$	75,000

SURFACING MATERIALS

ITEM NO.	304.201	304.301	304.32	403.11001	403.11902	403.12	403.4	403.6	410.22	417.	417.53	628.2
DESCRIPTION	GRAVEL	CRUSHED GRAVEL	CRUSHED GRAVEL FOR SHOULDER LEVELING	HOT BITUMINOUS PAVEMENT, MACHINE METHOD (QC/QA TIER 1)	HOT BITUMINOUS PAVEMENT, MACHINE METHOD, HIGH STRENGTH (QC/QA TIER 2)	HOT BITUMINOUS PAVEMENT, HAND METHOD	MATERIAL TRANSFER VEHICLE (MTV)	PAVEMENT JOINT ADHESIVE	ASPHALT EMULSION FOR TACK COAT	COLD PLANING BITUMINOUS SURFACES	REMOVE & INLAY EXISTING RUMBLE STRIPS	SAWED BITUMINOUS PAVEMENT
	CY	CY	TON	TON	TON	TON	TON	LF	GAL	SY	LF	LF
LOCATION												
PROJECT WIDE	32	51				10	21670		11885			
MAIN STREET / HORSE CORNER ROAD INTERSECTION					167	4		900		1956		108
NH ROUTE 4			997	18578	1703			180755		55152		106
RAMPS			8.4	83				450		973	463	57
TRUCK PULL-OFF			8.4	33				248				
DRIVEWAYS						307				2731		385
SHOULDER WIDENING				6		7		188				188
CB'S												
SIDE ROADS				67	6			385		862		
FROM SIDEWALK SUMMARY		6										167
SUB-TOTAL	32	57	1014	18767	1877	328	21670	182926	11885	61674	463	1011
ROUNDING	3	3	96	933	93	47	0	74	115	326	2	29
TOTAL	35	60	1110	19700	1970	375	21670	183000	12000	62000	465	1040

THIS INFORMATION IS FOR BIDDING PURPOSES ONLY

STATE OF NEW HAMPSHIRE

DEPARTMENT OF TRANSPORTATION ∘ BUREAU OF HIGHWAY DESIGN

SUMMARY OF QUANTITES

DGN	STATE PROJECT NO.	SHEET NO.	TOTAL SHEETS
29533 SUM	29533	11	46

GUARDRAIL

ITEM NO.	202.7	203.5554	203.55543	606.012	606.0122	606.1254	606.1256	606.18001	606.417	606.915	621.2	
DESCRIPTION	REMOVAL OF GUARDRAIL	GUARDRAIL EAGRT PLATFORM, TL 3	GUARDRAIL EAGRT OFFSET PLATFORM, TL 3	W6X9 STEEL POST REPLACEMENTS FOR BEAM GUARDRAIL POSTS	W6X9 STEEL POST ASSEMBLIES FOR BEAM GUARDRAIL POSTS	BEAM GUARDRAIL (TERMINAL UNIT TYPE EAGRT TL 3) (STEEL POST)	TERMINAL UNIT (X-TENSION)	31" W-BEAM GUARDRAIL WITH 8" OFFSET BLOCKS (STEEL POST)	PORTABLE CONCRETE BARRIER FOR TRAFFIC CONTROL	RESETTING GUARDRAIL BLOCK AND RAIL ONLY	RETROREFLECTIVE BEAM GUARDRAIL DELINEATOR	REMARKS
UNIT	LF	U	U	EA	EA	U	U	LF	LF	LF	EA	
LOCATION												
GR 1 STA 123+40 - 128+27 RT	75.0	2				2				387.5	5	REMOVE AND REPLACE EXISTING END UNITS
GR 2 STA 123+89 - 128+14 LT	87.5	2				2				325.0	5	REMOVE EXISTING END UNITS (37.5 LF AT APPROACH, 50 LF AT DEPARTURE) AND REPLACE
GR 3 STA 130+40 - 132+53 LT	212.5											REMOVE ENTIRE RUN OF EXISTING GUARDRAIL
GR 4 STA 205+49 - 211+12 LT	162.5		2			2		100.0		362.5	6	REMOVE EXISTING END UNITS (75 LF AT APPROACH, 87.5 LF AT DEPARTURE) AND REPLACE 50 LF OF GUARDRAIL AT EACH END
GR 5 STA 379+69 - 381+67 LT	200.0	2				1	1	112.5			2	REMOVE AND REPLACE ENTIRE RUN OF EXISTING GUARDRAIL
PROJECT WIDE				18	18				550.0			
SUBTOTAL	737.5	6	2	18	18	7	1	212.5	550.0	1075.0	18	
ROUNDING	12.5	0	0	7	7	0	0	12.5	10.0	25.0	7	
TOTAL	750	6	2	25	25	7	1	225	560	1100	25	

SUBSIDIARY ITEMS

DESCRIPTION
TRAFFIC SIGN REMOVAL

NOTE: THIS LIST SHOULD NOT BE CONSIDERED TO BE THE COMPLETE LIST OF SUBSIDIARY WORK PRESENT IN THE PROJECT. REFER ALSO TO THE PLANS, PROPOSAL, SPECIAL PROVISIONS, AND TO THE STANDARD SPECIFICATIONS.

SIGNING

ITEM NO.	DESCRIPTION	UNIT	TOTAL
615.01201	TRAFFIC SIGN TYPE A, BREAKAWAY MOUNTS	SF	175
615.0301	TRAFFIC SIGN TYPE C	SF	809
615.0601	TRAFFIC SIGN TYPE CC	SF	201
615.20301	REMOVING CANTILEVER TRAFFIC SIGN STRUCTURE	U	1

PAVEMENT MARKINGS

ITEM NO.	632.0104	632.0106	632.02	632.3104	632.3106	632.3112	632.3118	632.32	632.931
DESCRIPTION	RETROREFLECTIVE PAINT PAVEMENT MARKING, 4" LINE	RETROREFLECTIVE PAINT PAVEMENT MARKING, 6" LINE	RETROREFLECTIVE PAINT PAVEMENT MARKING SYMBOL OR WORD	RETROREFLECTIVE THERMOPLASTIC PAVEMENT MARKING, 4" LINE	RETROREFLECTIVE THERMOPLASTIC PAVEMENT MARKING 6' LINE	RETROREFLECTIVE THERMOPLASTIC PAVEMENT MARKING 12" LINE	RETROREFLECTIVE THERMOPLASTIC PAVEMENT MARKING, 18" LINE	RETROREFLECTIVE THERMOPLASTIC PAVEMENT MARKING, SYMBOL OR WORD	BLACKOUT PAVEMENT MARKING LINE, 12" WIDE & UNDER
UNIT	LF	LF	SF	LF	LF	LF	LF	SF	LF
LOCATION									
NH ROUTE 4	288574	3907		1724		2190	312	989	
MAIN STREET / HORSE CORNER ROAD INTERSECTION	2568			268	653		65	136	
KING ROAD INTERMEDIATE PAVEMENT MARKINGS			345						8,617
SUB-TOTAL	291142	3907	345	1992	653	2190	377	1125	8617
ROUNDING	2858	43	5	33	17	25	23	15	83
TOTAL	294000	3950	350	2025	670	2215	400	1140	8700

THIS INFORMATION IS FOR BIDDING PURPOSES ONLY

STATE OF NEW HAMPSHIRE

DEPARTMENT OF TRANSPORTATION ∘ BUREAU OF HIGHWAY DESIGN

SUMMARY OF QUANTITIES

DGN	STATE PROJECT NO.	SHEET NO.	TOTAL SHEETS
29533 SUM	29533	12	46

n34clb"

PERMANENT CONSTRUCTION SIGNS AND WARNING DEVICES

(INCLUDED IN ITEM NO. 619.1)

SIGN NO.	DESCRIPTION	SIZE (ft)	S.F.	NO.	TOTAL	POST	....	REMARKS
G20-2a	END ROAD WORK	2X4	8	13	104	13		ORANGE/BLACK
R9-8	PEDESTRIAN CROSSWALK	1.5X3	4.5	2	9		2	BLACK/WHITE
R9-9	SIDEWALK CLOSED	1X2	2	2	4		2	BLACK/WHITE
R9-10	SIDEWALK CLOSED, USE OTHER SIDE	1X2	2	2	4		2	BLACK/WHITE
R9-11	SIDEWALK CLOSED AHEAD, CROSS HERE	1X2	2	1	2		1	BLACK/WHITE
R9-11a	SIDEWALK CLOSED, CROSS HERE	1X2	2	1	2		1	BLACK/WHITE
W11-2	PEDESTRIAN	3X3	16	2	32		2	ORANGE/BLACK
W16-7pL	DOWNWARD DIAGONAL ARROW PLAQUE (LEFT)	1X2	2	2	4		2	ORANGE/BLACK
W20-1a	ROAD WORK AHEAD	4X4	16	8	128	16		FLUORESCENT ORANGE/BLACK
W20-1c	ROAD WORK 1000 FEET	4X4	16	5	80	10		FLUORESCENT ORANGE/BLACK
W20-1e	ROAD WORK 1/2 MILE	4X4	16	5	80	10		FLUORESCENT ORANGE/BLACK
R50-1	NH LAW WORK ZONE	2X4	8	5	40	10		BLACK/WHITE

The estimated quantities of "Permanent Controls" are hereby listed. The Contractor is responsible for all "Operational Controls" required under section 619 of the

SIDEWALKS

ITEM NO.	206.1*	608.2401	608.54	609.5	304.301*	628.2*
DESCRIPTION	COMMON STRUCTURE EXCAVATION	4" CONCRETE SIDEWALK	DETECTABLE WARNING DEVICES, CAST IRON	RESET GRANITE CURB	CRUSHED GRAVEL	SAWED BITUMINOUS PAVEMENT
UNIT	CY	SY	SY	LF	CY	LF
LOCATION						
MAIN ST / HORSE CORNER RD	9	52	7	105	6	167
SUBTOTAL	9	52	7	105	6	167
ROUNDING		3	3	5		
TOTAL	**	55	10	110	**	**

**NOT AN ITEM TOTAL

TRAFFIC SIGNALS

ITEM NO.	616.606	616.650
DESCRIPTION	TRAFFIC SIGNAL DETECTOR LOOP 6 FT X 6 FT	TRAFFIC SIGNAL DETECTOR LOOP 6 FT X 50 FT
LOCATION	EA	EA
NH ROUTE 4 - WESTBOUND	2.0	3.0
NH ROUTE 4 - EASTBOUND	2.0	3.0
MAIN STREET - SOUTHBOUND		2.0
HORSE CORNER RD - NORTHBOUND		2.0
SUBTOTAL	4	10
ROUNDING	0	0
TOTAL	4	10

POST MOUNTED DELINEATORS

ITEM NO.	621.31	621.32
ITEM	SINGLE DELINEATOR WITH POST	DOUBLE DELINEATOR WTH POST
COLOR	EA	EA
WHITE	226	
RED		4
GREEN	4	
SUBTOTAL	230	4
ROUNDING	15	1
TOTAL	245	5

SALVAGED MATERIALS

DESCRIPTION
GUARDRAIL END UNITS

EARTHWORK

DESCRIPTION		CY	TOTAL
COMMON EXCAVATION FOR ESTIMATE	ITEM 203.1	85	85
EMBANKMENT-IN-PLACE FOR ESTIMATE	ITEM 203.601	90	90

THIS INFORMATION IS FOR BIDDING PURPOSES ONLY

STATE OF NEW HAMPSHIRE

DEPARTMENT OF TRANSPORTATION ∘ BUREAU OF HIGHWAY DESIGN

SUMMARY OF QUANTITES

DGN	STATE PROJECT NO.	SHEET NO.	TOTAL SHEETS
29533 SUM	29533	13	46

ITEM #	IDENT #	SIGN SIZE WIDTH (inch)	SIGN SIZE HEIGHT (inch)	TEXT	TEXT DIMENSIONS LETTER HEIGHT (inch) UC	LC	CAPS	SHIELD SIZE (inch)	ARROW (inch)	NUMERAL (inch)	# SIGNS REQ'D	SIGN AREA (SQ. FT.) NOM AREA	TOTAL AREA	POSTS PER SIGN BREAKAWAY	STEEL I-BEAM	CONCRETE BASE	4" OD ALUMINUM	U-CHANNEL-GALV.	REMARKS
615.0301	R1-1	36	36	STOP			12C				12	9.00	108.00					2	WHITE/RED REMOVE & RESET EXISTING STREET SIGNS ON SEPARATE U-CHANNEL POST POST/BOLT SPACING SIMILAR TO DETAIL, SHEET 5
615.0301	R1-2	36	36	YIELD			3C				1	4.50	4.50					1	WHITE/RED
615.0301	R2-1(35)	30	36	SPEED LIMIT 35			5E 5E			12E	1	7.50	7.50					1	BLACK ON WHITE
615.0301	R2-1(40)	30	36	SPEED LIMIT 40			5E 5E			12E	4	7.50	30.00					1	BLACK ON WHITE
615.0301	R2-1(45)	30	36	SPEED LIMIT 45			5E 5E			12E	1	7.50	7.50					1	BLACK ON WHITE
615.0301	R2-1(50)	30	36	SPEED LIMIT 50			5E 5E			12E	6	7.50	45.00					1	BLACK ON WHITE
615.0301	R3-2	24	24								5	4.00	20.00					1	RED/BLACK ON WHITE
615.0601											1	4.00	4.00						RED/BLACK ON WHITE MOUNT BEHIND R3-2
615.0301	R3-8(13)	36	30	ONLY			4D				1	7.50	7.50					1	BLACK ON WHITE
615.0301	R3-8(134)	48	30	ONLY			4D				2	10.00	20.00					2	BLACK ON WHITE
615.0301	R3-9b	24	36	CENTER LANE ONLY			3E 3E 3E				6	6.00	36.00					1	BLACK ON WHITE

ITEM #	IDENT#	SIGN SIZE WIDTH (inch)	SIGN SIZE HEIGHT (inch)	TEXT	TEXT DIMENSIONS LETTER HEIGHT (inch) UC	LC	CAPS	SHIELD SIZE (inch)	ARROW (inch)	NUMERAL (inch)	# SIGNS REQ'D	SIGN AREA (SQ. FT.) NOM AREA	TOTAL AREA	POSTS PER SIGN BREAKAWAY	STEEL I-BEAM	CONCRETE BASE	4" OD ALUMINUM	U-CHANNEL-GALV	REMARKS
615.0301	R4-3	24	30	SLOWER TRAFFIC KEEP RIGHT			4D 4D 4D 4D				3	5.00	15.00					1	BLACK ON WHITE
615.0301	R4-7	24	30								8	5.00	40.00					1	BLACK ON WHITE
615.0301	R5-10B1	18	24	CLOSED TO UNAUTHORIZED VEHICLES			5B 3C 2C 3C				2	3.00	6.00					1	BLACK ON WHITE MOUNT BACK TO BACK
615.0601	R6-1R	36	12	ONE WAY			4D				6	9.00	54.00						BLACK ON WHITE MOUNT ABOVE R3-2
615.0301	R7-2B1	18	24	NO PARKING			6EM 3B 3B				10	3.00	30.00					1	RED/BLACK ON WHITE

GENERAL NOTES

1. REFER TO THE 2010 STANDARD SPECIFICATIONS FOR ROAD AND BRIDGE CONSTRUCTION PUBLISHED BY THE NHDOT.
2. NOTE NEW REFLECTIVITY REQUIREMENTS IN THE 2010 STANDARD SPECIFICATIONS FOR ROAD AND BRIDGE CONSTRUCTION SECTION 718 PUBLISHED BY THE NHDOT.
3. REFER TO THE 2010 STANDARD PLANS FOR ROAD CONSTRUCTION AS PUBLISHED BY THE NHDOT FOR EXACT DETAILS OF PERMANENT SIGNING STANDARDS AND NHDOT SPECIFIC SIGNS.
4. REFER TO THE LATEST EDITION OF THE STANDARD HIGHWAY SIGNS MANUAL AS PUBLISHED BY THE USDOT-FHWA FOR EXACT DETAILS OF BORDERS, ETC.
5. THE ALUMINUM OR U-CHANNEL POST SHALL BE FLUSH WITH THE TOP OF THE SIGN ON ALL SINGLE POST ASSEMBLIES

STATE OF NEW HAMPSHIRE

DEPARTMENT OF TRANSPORTATION BUREAU OF HIGHWAY DESIGN

SIGN TEXT LAYOUT

EXCEL FILE NAME	STATE PROJECT NO.	FEDERAL PROJECT NO.	SHEET NO.	TOTAL SHEETS
S:\Highway-Design\(TOWNS)\Chichester\29533\Traffic\Sign & Pave Marking Submission	29533	X-A004(170)	14	46

ITEM #	IDENT #	SIGN SIZE WIDTH (inch)	SIGN SIZE HEIGHT (inch)	TEXT	TEXT DIMENSIONS LETTER HEIGHT (inch) UC	LC	CAPS	SHIELD SIZE (inch)	ARROW (inch)	NUMERAL (inch)	# SIGNS REQ'D	SIGN AREA (SQ. FT.) NOM AREA	TOTAL AREA	POSTS PER SIGN BREAKAWAY	STEEL I-BEAM	CONCRETE BASE	4" OD ALUMINUM	U-CHANNEL-GALV.	REMARKS
615.0301	W2-1	30	30								4	6.25	25.00					2	BLACK ON YELLOW SEE DETAIL, SHEET 5
615.0301	W2-2L	30	30								3	6.25	18.75					1	BLACK ON YELLOW
615.0301	W2-2R	30	30								3	6.25	18.75					1	BLACK ON YELLOW
615.0301	W2-6	30	30					+			1	6.25	6.25					1	BLACK ON YELLOW
615.0301	W3-1	30	30								3	6.25	18.75					1	BLACK/RED/WHITE ON YELLOW
615.0301	W3-2	30	30								1	6.25	6.25					1	BLACK/RED/WHITE ON YELLOW
615.0301	W3-3	30	30								2	6.25	12.50					1	BLACK/RED/GREEN ON YELLOW SEE DETAIL, SHEET 5
615.0301	W3-5(35)	36	36				3E 3E	18x24	18x12	12C	1	9.00	9.00					2	BLACK/WHITE ON YELLOW SEE DETAIL, SHEET 5
615.0301	W3-5(40)	36	36				3E 3E		18x12	12C	2	9.00	18.00					2	BLACK/WHITE/ YELLOW SEE DETAIL, SHEET 5
615.0301	W4-2L	36	36								1	9.00	9.00					2	BLACK ON YELLOW SEE DETAIL, SHEET 5

ITEM #	IDENT#	SIGN SIZE WIDTH (inch)	SIGN SIZE HEIGHT (inch)	TEXT	TEXT DIMENSIONS LETTER HEIGHT (inch) UC	LC	CAPS	SHIELD SIZE (inch)	ARROW (inch)	NUMERAL (inch)	# SIGNS REQ'D	SIGN AREA (SQ. FT.) NOM AREA	TOTAL AREA	POSTS PER SIGN BREAKAWAY	STEEL I-BEAM	CONCRETE BASE	4" OD ALUMINUM	U-CHANNEL-GALV.	REMARKS
615.0301	W4-2R	36	36								2	9.00	18.00					2	BLACK ON YELLOW SEE DETAIL, SHEET 5
615.0601	W4-2a(L)	24	24				5C 5C 5C				1	4.00	4.00						BLACK ON YELLOW MOUNT BELOW W4-2L ON LEFT
615.0301	W6-3	36	36	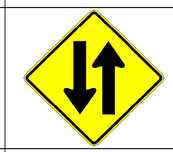							1	9.00	9.00					2	BLACK ON YELLOW SEE DETAIL, SHEET 5
615.0601	W6-3b	30	24				5C 5C				1	5.00	5.00						BLACK ON YELLOW MOUNT BELOW W6-3 ON LEFT
615.0601	W7-B2(1)	24	18				4C 4C			4C	2	3.00	6.00						BLACK ON YELLOW MOUNT BELOW W14-B2(M) ON LEFT
615.0601	W7-B2(2)	24	18				4C 4C			4C	1	3.00	3.00						BLACK ON YELLOW MOUNT BELOW W14-B2(M) ON LEFT

GENERAL NOTES

1. REFER TO THE 2010 STANDARD SPECIFICATIONS FOR ROAD AND BRIDGE CONSTRUCTION PUBLISHED BY THE NHDOT.
2. NOTE NEW REFLECTIVITY REQUIREMENTS IN THE 2010 STANDARD SPECIFICATIONS FOR ROAD AND BRIDGE CONSTRUCTION SECTION 718 PUBLISHED BY THE NHDOT.
3. REFER TO THE 2010 STANDARD PLANS FOR ROAD CONSTRUCTION AS PUBLISHED BY THE NHDOT FOR EXACT DETAILS OF PERMANENT SIGNING STANDARDS AND NHDOT SPECIFIC SIGNS.
4. REFER TO THE LATEST EDITION OF THE STANDARD HIGHWAY SIGNS MANUAL AS PUBLISHED BY THE USDOT-FHWA FOR EXACT DETAILS OF BORDERS, ETC.
5. THE ALUMINUM OR U-CHANNEL POST SHALL BE FLUSH WITH THE TOP OF THE SIGN ON ALL SINGLE POST ASSEMBLIES

STATE OF NEW HAMPSHIRE

DEPARTMENT OF TRANSPORTATION BUREAU OF HIGHWAY DESIGN

SIGN TEXT LAYOUT

EXCEL FILE NAME	STATE PROJECT NO.	FEDERAL PROJECT NO.	SHEET NO.	TOTAL SHEETS
S:\Highway-Design\(TOWNS)\Chichester\29533\Traffic\Sign & Pave Marking Submission	29533	X-A004(170)	15	46

ITEM #	IDENT #	SIGN SIZE WIDTH (inch)	SIGN SIZE HEIGHT (inch)	TEXT	TEXT DIMENSIONS LETTER HEIGHT (inch) UC	LC	CAPS	SHIELD SIZE (inch)	ARROW (inch)	NUMERAL (inch)	# SIGNS REQ'D	SIGN AREA (SQ. FT.) NOM AREA	TOTAL AREA	POSTS PER SIGN BREAKAWAY	STEEL I-BEAM	CONCRETE BASE	4" OD ALUMINUM	U-CHANNEL-GALV.	REMARKS
615.0601	W7-B	30	24	NEXT 2 MILES			5C 5C				3	5.00	15.00						BLACK ON YELLOW MOUNT BELOW W11-B5 & W14-B2(M)
615.0301	W8-15	48	48	GROOVED PAVEMENT			8C 8C				1	16.00	16.00						BLACK ON YELLOW MOUNT ON EXISTING POSTS
6115.0601	W8-15P	30	24								1	5.00	5.00						BLACK ON YELLOW MOUNT BELOW W8-15 ON LEFT
615.0301	W9-1L	36	36	LEFT LANE ENDS			6D 6D 6D				1	9.00	9.00					2	BLACK ON YELLOW SEE DETAIL, SHEET 5
615.0301	W 11-B5	36	36	MOOSE CROSSING			6D 6D				2	9.00	18.00					2	BLACK ON YELLOW SEE DETAIL, SHEET 5
615.0301	W 14-B2(M)	36	36	LEFT TURNING TRAFFIC			5C 5C 5C				6	9.00	54.00					2	BLACK ON YELLOW SEE DETAIL, SHEET 5
615.0601	W 16-2aP	24	12	1200 FT			4D			4D	1	2.00	2.00						BLACK ON FLUORESCENT YELLOW-GREEN SHEET ALUMINUM
615.0601	W 16-4P(M)	24	18	NEXT 1500 FT			4D 4D			4D	1	3.00	3.00						BLACK ON YELLOW MOUNT BELOW W 14-B2(M) ON LEFT SHEET ALUMINUM
615.0601	W 16-8(M)1	42	16	← Trap Road Bailey Road →	4C 4C	4C 4C			6x4 6x4		1	4.67	4.67						BLACK ON YELLOW MOUNT BELOW W2-1 SHEET ALUMINUM
615.0601	W 16-8(M)2	42	16	← Bailey Road Trap Road →	4C 4C	4C 4C			6x4 6x4		1	4.67	4.67						BLACK ON YELLOW MOUNT BELOW W2-1 SHEET ALUMINUM

ITEM #	IDENT#	SIGN SIZE WIDTH (inch)	SIGN SIZE HEIGHT (inch)	TEXT	TEXT DIMENSIONS LETTER HEIGHT (inch) UC	LC	CAPS	SHIELD SIZE (inch)	ARROW (inch)	NUMERAL (inch)	# SIGNS REQ'D	SIGN AREA (SQ. FT.) NOM AREA	TOTAL AREA	POSTS PER SIGN BREAKAWAY	STEEL I-BEAM	CONCRETE BASE	4" OD ALUMINUM	U-CHANNEL-GALV.	REMARKS
615.0601	W16-8(M)3	36	8	Robinson Rd	4C	4C					2	2.00	4.00						BLACK ON YELLOW MOUNT BELOW W2-2L & W2-2R SHEET ALUMINUM
615.0601	W16-8(M)4	36	8	Mason Rd	4C	4C					2	2.00	4.00						BLACK ON YELLOW MOUNT BELOW W2-2L & W2-2R SHEET ALUMINUM
615.0601	W16-8(M)5	36	8	King Rd	4C	4C					2	2.00	4.00						BLACK ON YELLOW MOUNT BELOW W2-2L & W2-2R SHEET ALUMINUM
615.0601	W16-8(M)6	42	16	← Main St Horse Corner Rd →	4C 4C	4C 4C			6x4 6x4		1	4.67	4.67						BLACK ON YELLOW MOUNT BELOW W2-1 SHEET ALUMINUM
615.0601	W16-8(M)7	42	16	← Horse Corner Rd Main St →	4C 4C	4C 4C			6x4 6x4		1	4.67	4.67						BLACK ON YELLOW MOUNT BELOW W2-1 SHEET ALUMINUM
615.0601	W16-8(M)8	42	16	← Cross Rd Smith Sanborn Rd →	4C 4C	4C 4C			6x4 6x4		1	4.67	4.67						BLACK ON YELLOW MOUNT BELOW W2-1 SHEET ALUMINUM

GENERAL NOTES

1. REFER TO THE 2010 STANDARD SPECIFICATIONS FOR ROAD AND BRIDGE CONSTRUCTION PUBLISHED BY THE NHDOT.
2. NOTE NEW REFLECTIVITY REQUIREMENTS IN THE 2010 STANDARD SPECIFICATIONS FOR ROAD AND BRIDGE CONSTRUCTION SECTION 718 PUBLISHED BY THE NHDOT.
3. REFER TO THE 2010 STANDARD PLANS FOR ROAD CONSTRUCTION AS PUBLISHED BY THE NHDOT FOR EXACT DETAILS OF PERMANENT SIGNING STANDARDS AND NHDOT SPECIFIC SIGNS.
4. REFER TO THE LATEST EDITION OF THE STANDARD HIGHWAY SIGNS MANUAL AS PUBLISHED BY THE USDOT-FHWA FOR EXACT DETAILS OF BORDERS, ETC.
5. THE ALUMINUM OR U-CHANNEL POST SHALL BE FLUSH WITH THE TOP OF THE SIGN ON ALL SINGLE POST ASSEMBLIES

STATE OF NEW HAMPSHIRE

DEPARTMENT OF TRANSPORTATION BUREAU OF HIGHWAY DESIGN

SIGN TEXT LAYOUT

EXCEL FILE NAME	STATE PROJECT NO.	FEDERAL PROJECT NO.	SHEET NO.	TOTAL SHEETS
S:\Highway-Design\(TOWNS)\Chichester\29533\Traffic\Sign & Pave Marking Submission	29533	X-A004(170)	16	46

ITEM #	IDENT #	SIGN SIZE WIDTH (inch)	SIGN SIZE HEIGHT (inch)	TEXT	TEXT DIMENSIONS LETTER HEIGHT (inch) UC	LC	CAPS	SHIELD SIZE (inch)	ARROW (inch)	NUMERAL (inch)	# SIGNS REQ'D	SIGN AREA (SQ. FT.) NOM AREA	TOTAL AREA	POSTS PER SIGN BREAKAWAY	STEEL I-BEAM	CONCRETE BASE	4" OD ALUMINUM	U-CHANNEL-GALV.	REMARKS
615.0601	W16-8(M)9	42	16		4C 4C	4C 4C			6x4 6x4		1	4.67	4.67						BLACK ON YELLOW MOUNT BELOW W2-1 SHEET ALUMINUM
615.0601	W7-B(M)	24	18				5C			5C	4	3.00	12.00						BLACK ON FLUORESCENT YELLOW-GREEN MOUNT BELOW S3-1 ON LEFT SHEET ALUMINUM
615.0601	OM1-3	18	18	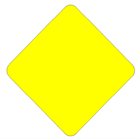							8	2.25	18.00						YELLOW MOUNT BELOW R4-7
615.0301	S3-1	36	36								12	9.00	108.00					2	BLACK/RED ON FLUORESCENT YELLOW-GREEN
615.0301	M1-1	30	24				2.5E			10C	1	5.00	5.00					1	RED/BLUE/WHITE
615.0301	M1-4(4)	24	24							12D	3	4.00	12.00					1	BLACK ON WHITE MOUNT BELOW M1-4(202)
615.0301	M1-4 (202)	30	24							12D	3	5.00	15.00					1	BLACK ON WHITE
615.0301	M1-5(9)	24	24							12D	3	4.00	12.00					1	BLACK ON WHITE
6115.0301	M1-5(28)	24	24							12D	1	4.00	4.00					1	BLACK ON WHITE
615.0601	M2-1	21	15				9C				1	2.19	2.19						BLACK ON WHITE MOUNT ABOVE M1-1

ITEM #	IDENT#	SIGN SIZE WIDTH (inch)	SIGN SIZE HEIGHT (inch)	TEXT	TEXT DIMENSIONS LETTER HEIGHT (inch) UC	LC	CAPS	SHIELD SIZE (inch)	ARROW (inch)	NUMERAL (inch)	# SIGNS REQ'D	SIGN AREA (SQ. FT.) NOM AREA	TOTAL AREA	POSTS PER SIGN BREAKAWAY	STEEL I-BEAM	CONCRETE BASE	4" OD ALUMINUM	U-CHANNEL-GALV.	REMARKS
615.0601	M2-1(I)	21	15				9C				1	2.19	2.19						BLUE ON WHITE MOUNT ABOVE M1-1
615.0601	M3-2	24	12				7C/6C				2	2.00	4.00						BLACK ON WHITE MOUNT ABOVE M1-4(4) & M1-5(9)
615.0601	M3-4	24	12				7C/6C				4	2.00	8.00						BLACK ON WHITE MOUNT ABOVE M1-4(4) & M1-5(9)
615.0601	M6-2(I)R	21	15								2	2.19	4.38						WHITE/BLUE MOUNT BELOW D9-2
615.0301	I-20(1)	48	8				4D				2	2.67	5.33					1	WHITE/GREEN
615.0601	I-20(2)	48	8				4D				1	2.67	2.67					1	WHITE/GREEN MOUNT BEHIND I-20(1)

GENERAL NOTES

1. REFER TO THE 2010 STANDARD SPECIFICATIONS FOR ROAD AND BRIDGE CONSTRUCTION PUBLISHED BY THE NHDOT.
2. NOTE NEW REFLECTIVITY REQUIREMENTS IN THE 2010 STANDARD SPECIFICATIONS FOR ROAD AND BRIDGE CONSTRUCTION SECTION 718 PUBLISHED BY THE NHDOT.
3. REFER TO THE 2010 STANDARD PLANS FOR ROAD CONSTRUCTION AS PUBLISHED BY THE NHDOT FOR EXACT DETAILS OF PERMANENT SIGNING STANDARDS AND NHDOT SPECIFIC SIGNS.
4. REFER TO THE LATEST EDITION OF THE STANDARD HIGHWAY SIGNS MANUAL AS PUBLISHED BY THE USDOT-FHWA FOR EXACT DETAILS OF BORDERS, ETC.
5. THE ALUMINUM OR U-CHANNEL POST SHALL BE FLUSH WITH THE TOP OF THE SIGN ON ALL SINGLE POST ASSEMBLIES

STATE OF NEW HAMPSHIRE

DEPARTMENT OF TRANSPORTATION BUREAU OF HIGHWAY DESIGN

SIGN TEXT LAYOUT

EXCEL FILE NAME	STATE PROJECT NO.	FEDERAL PROJECT NO.	SHEET NO.	TOTAL SHEETS
S:\Highway-Design\(TOWNS)\Chichester\29533\Traffic\Sign & Pave Marking Submission	29533	X-A004(170)	17	46

ITEM #	IDENT #	SIGN SIZE WIDTH (inch)	SIGN SIZE HEIGHT (inch)	TEXT	TEXT DIMENSIONS LETTER HEIGHT (inch) UC	LC	CAPS	SHIELD SIZE (inch)	ARROW (inch)	NUMERAL (inch)	# SIGNS REQ'D	SIGN AREA (SQ. FT.) NOM AREA	TOTAL AREA	POSTS PER SIGN BREAKAWAY	STEEL I-BEAM	CONCRETE BASE	4" OD ALUMINUM	U-CHANNEL-GALV.	REMARKS
615.0601	I-20(3)	48	8				4D				1	2.67	2.67					1	WHITE/GREEN MOUNT BEHIND I-20(1)
615.01201	GA-01	84	84				8E 2.5E	24/24	18.25x 29.25 @45deg	10D/10D	1	49.00	49.00	X	X				WHITE/BLUE/ RED/GREEN
615.01201	GA-02	150	120	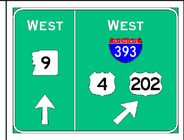			10E/8E 2.5E	24 24 24/24	18x25/ 18x25@45	10C 12D 12D/12D	1	125.00	125.00	X	X				WHITE/BLUE/RED/ BLACK/GREEN
615.0301	D9-2	24	24				20EM				1	4.00	8.00					1	WHITE/BLUE
615.0601											1								WHITE/BLUE MOUNT BELOW EXISTING GORE SIGN 'WEST 393 4 202' ON RIGHT

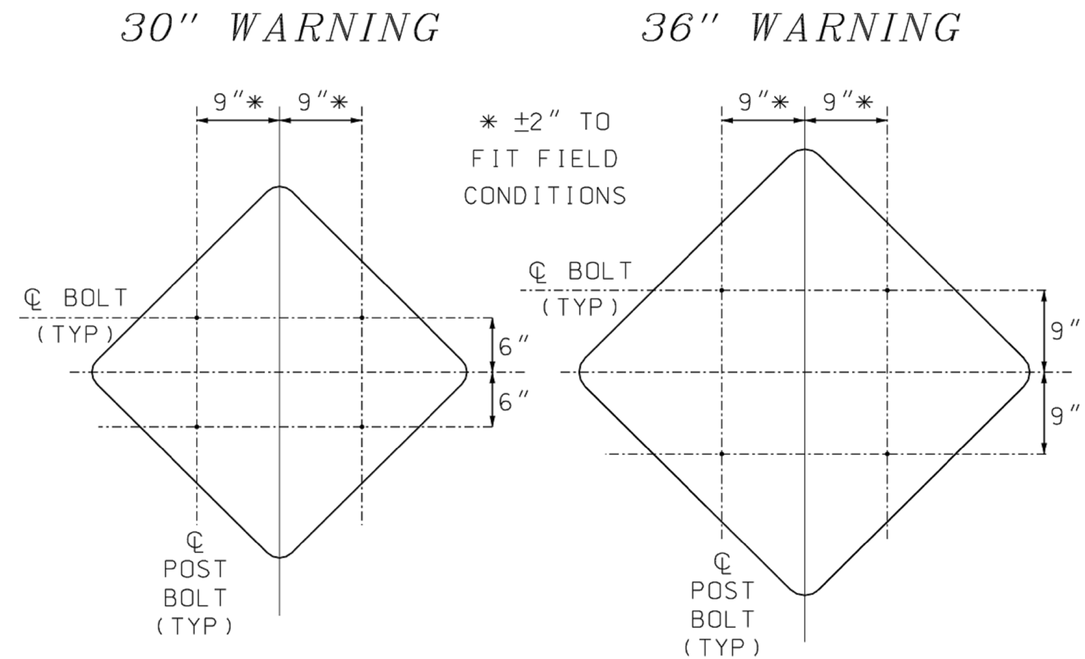

POST & BOLT SPACING DETAIL
NTS

GENERAL NOTES

1. REFER TO THE 2010 STANDARD SPECIFICATIONS FOR ROAD AND BRIDGE CONSTRUCTION PUBLISHED BY THE NHDOT.
2. NOTE NEW REFLECTIVITY REQUIREMENTS IN THE 2010 STANDARD SPECIFICATIONS FOR ROAD AND BRIDGE CONSTRUCTION SECTION 718 PUBLISHED BY THE NHDOT.
3. REFER TO THE 2010 STANDARD PLANS FOR ROAD CONSTRUCTION AS PUBLISHED BY THE NHDOT FOR EXACT DETAILS OF PERMANENT SIGNING STANDARDS AND NHDOT SPECIFIC SIGNS.
4. REFER TO THE LATEST EDITION OF THE STANDARD HIGHWAY SIGNS MANUAL AS PUBLISHED BY THE USDOT-FHWA FOR EXACT DETAILS OF BORDERS, ETC.
5. THE ALUMINUM OR U-CHANNEL POST SHALL BE FLUSH WITH THE TOP OF THE SIGN ON ALL SINGLE POST ASSEMBLIES

STATE OF NEW HAMPSHIRE

DEPARTMENT OF TRANSPORTATION BUREAU OF HIGHWAY DESIGN

SIGN TEXT LAYOUT

EXCEL FILE NAME	STATE PROJECT NO.	FEDERAL PROJECT NO.	SHEET NO.	TOTAL SHEETS
S:\Highway-Design\(TOWNS)\Chichester\29533\Traffic\Sign & Pave Marking Submission	29533	X-A004(107)	18	46

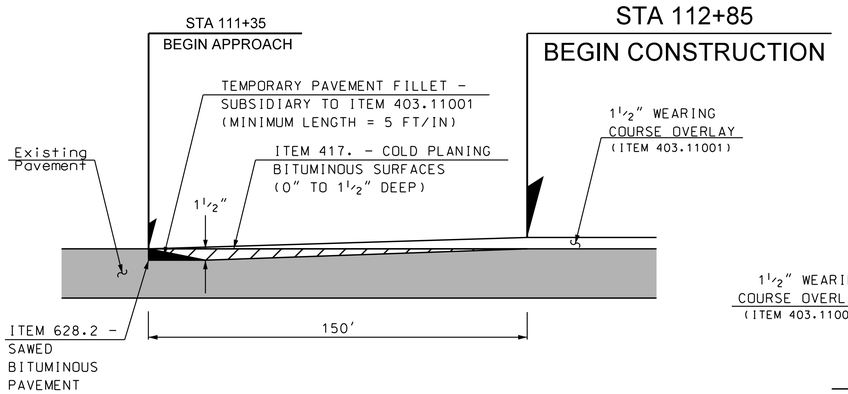

US ROUTE 202/4 & NH ROUTE 9
EASTBOUND & WESTBOUND
OVERLAY PAVEMENT MATCH

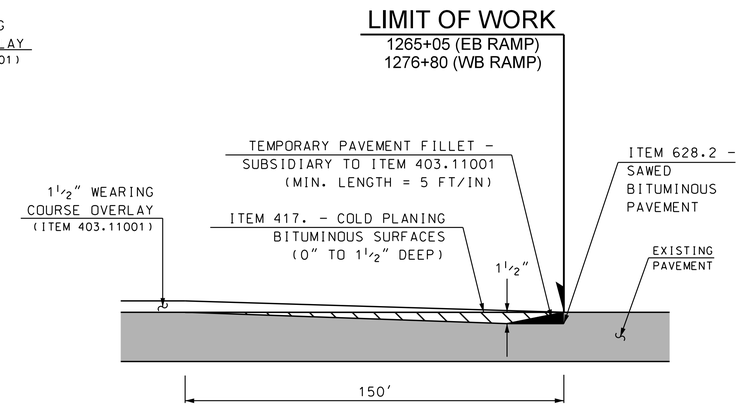

I-393
EASTBOUND & WESTBOUND RAMPS
OVERLAY PAVEMENT MATCH

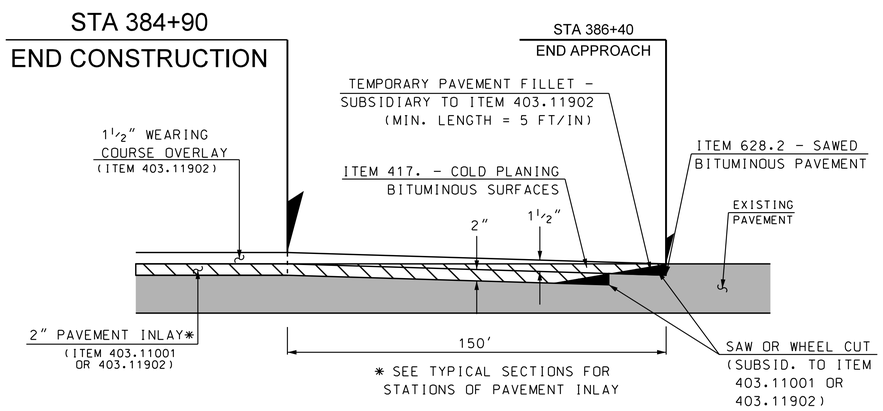

US ROUTE 202/4 & NH ROUTE 9
EASTBOUND & WESTBOUND
INLAY/OVERLAY PAVEMENT MATCH

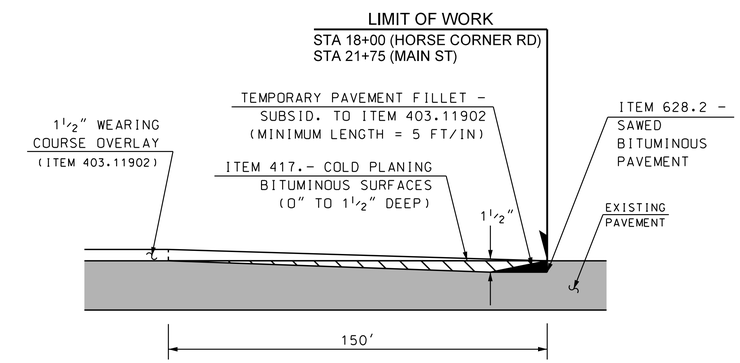

HORSE CORNER RD./ MAIN ST.
OVERLAY PAVEMENT MATCH

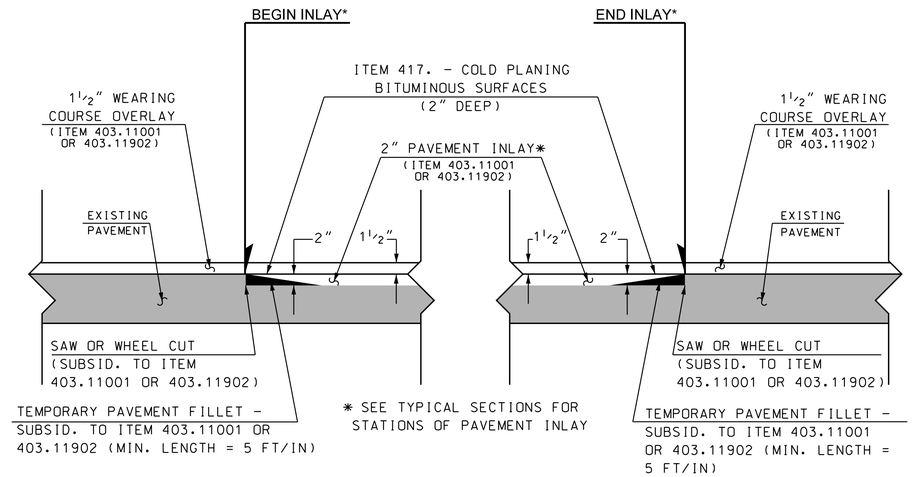

US ROUTE 202/4 & NH ROUTE 9
INLAY PAVEMENT MATCH

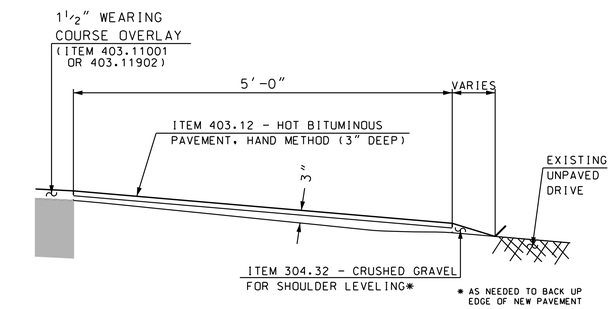

TYPICAL UNPAVED DRIVE APRON

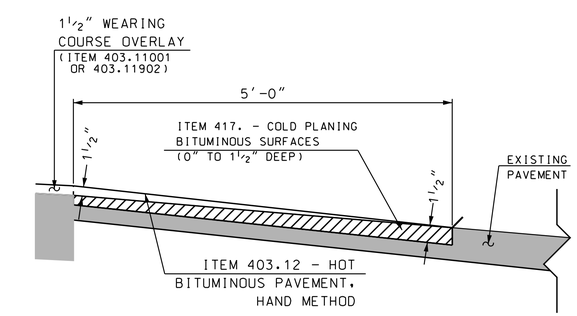

TYPICAL PAVED DRIVE APRON

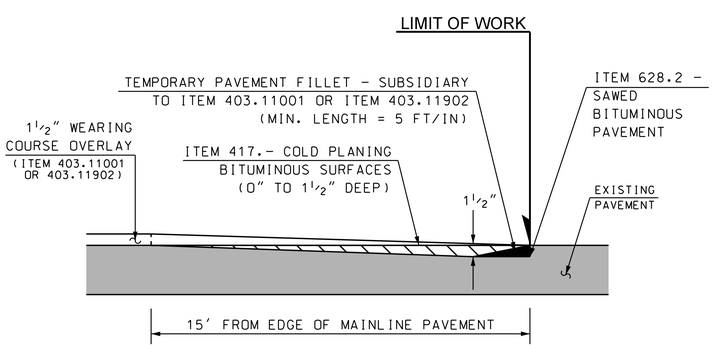

SIDE ROADS
OVERLAY PAVEMENT MATCH

NOTE:
1. USE ITEM 41.22 - ASPHALT EMULSION FOR TACK COAT BETWEEN THE LAYERS OF PAVMENT

NOT TO SCALE

STATE OF NEW HAMPSHIRE			
DEPARTMENT OF TRANSPORTATION ∘ BUREAU OF HIGHWAY DESIGN			
PAVEMENT MATCH DETAILS			
DGN	STATE PROJECT NO.	SHEET NO.	TOTAL SHEETS
29533pavematch	29533	19	46

NUMBER	DATE	STATION	DESCRIPTION

REVISIONS AFTER PROPOSAL

SDR PROCESSED	NAME1	DATE	DATE1
NEW DESIGN	TLR	DATE	05/09/16
SHEET CHECKED	SLM	DATE	05/10/16
AS BUILT DETAILS		DATE	

n34clb"

(1) STA 300+03, LT 54.6' TO STA 300+02, LT 38.6'
CONST. 16' X 24" RCP (2000D)
CONNECT TO EXISTING INV. OUT = 505.87 (APPROX.)
CONST. 15" STEEL END SECTION AT OUTLET
CONST. STONE FILL, CLASS C AT OUTLET (15' L X 10' W X 1' D)

(2) STA 311+96, RT 35.0' TO STA 311+96, RT 27.0'
CONST. 8' X 24" RCP (2000D)
CONNECT TO EXISTING INV. IN = 465.82 (APPROX.)
CONST. 15" STEEL END SECTION AT INLET
REMOVE EXISTING 20.2' X 24" CMP (SUBSIDIARY)
AT +97, RT 48.6' TO +97, RT 30.3'

(3) STA 324+10, LT 69.9' TO STA 324+12, RT 74.4'
LINE EXISTING 36" RCP WITH 144.4' X PE SOLID WALL LINER
CONST. STONE FILL, CLASS C AT OUTLET (15' L X 10' W X 1' D)
36" INV. OUT = 430.15
CONST. STONE FILL CLASS C AT INLET (10' L X 10' W X 1' D)
36" INV. IN = 432.00
* CONSTRUCT WATER DIVERSION

(R1) STA 300+02, LT 38.6'
REMOVE EXISTING HEADWALL

(R2) STA 311+96, RT 27.0'
REMOVE EXISTING HEADWALL

(R3) STA 311+97, RT 30.3'
REMOVE EXISTING HEADWALL

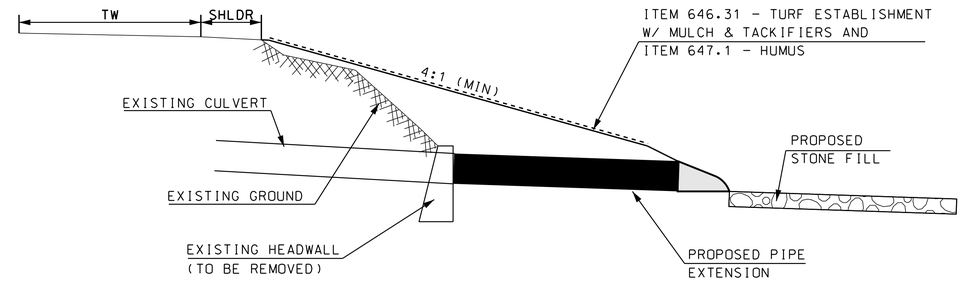

SECTION B-B

NOTES:

1. FILL MATERIAL AND EXCAVATION REQUIRED FOR PLACEMENT OF STONE FILL AND FOR AREAS OUTSIDE THE LIMITS OF PROPOSED PIPE TRENCH SHALL BE PAID FOR UNDER ITEM 203.601 - EMBANKMENT-IN-PLACE AND ITEM 206.1 - COMMON STRUCUTURE EXCAVATION, RESPECTIVELY.

DRAINAGE NOTES 1&2
DETAIL

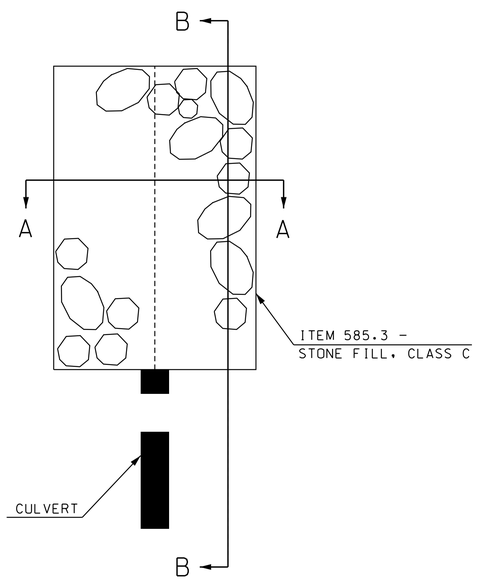

PLAN VIEW

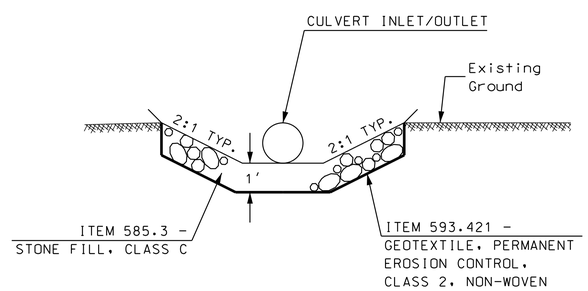

SECTION A-A

INLET & OUTLET
PROTECTION DETAIL

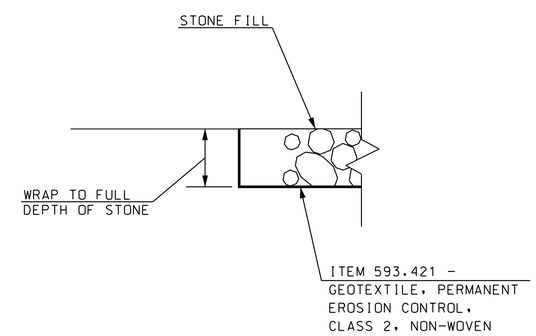

GEOTEXTILE
SECTION DETAIL

NOT TO SCALE

REVISIONS AFTER PROPOSAL			
NUMBER	DATE	STATION	STATION	DESCRIPTION

SDR PROCESSED		DATE
NEW DESIGN	CLB	DATE 5/2016
SHEET CHECKED	SLM	DATE 5/2016
AS BUILT DETAILS		DATE

STATE OF NEW HAMPSHIRE
DEPARTMENT OF TRANSPORTATION ∘ BUREAU OF HIGHWAY DESIGN

DRAINAGE NOTES AND DETAILS

DGN	STATE PROJECT NO.	SHEET NO.	TOTAL SHEETS
29533DrainDets	29533	20	46

"n34clb"

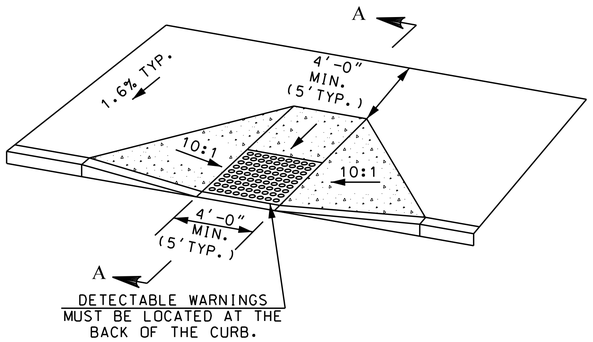

PERPENDICULAR CURB RAMP DETAIL

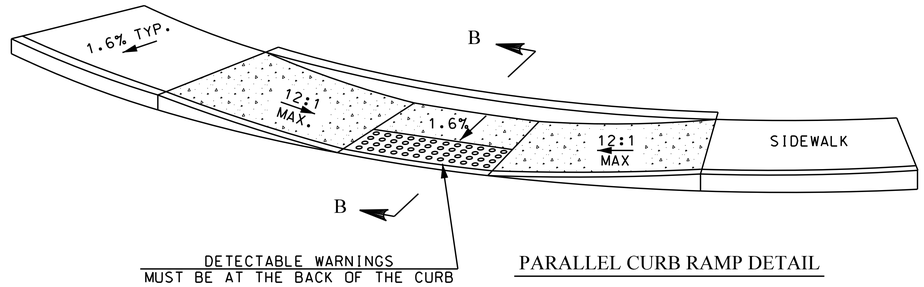

PARALLEL CURB RAMP DETAIL

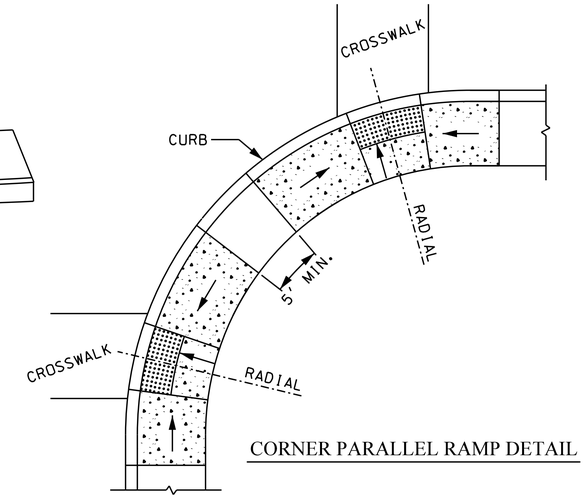

CORNER PARALLEL RAMP DETAIL

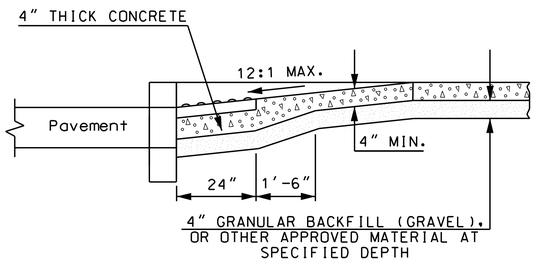

SECTION A-A

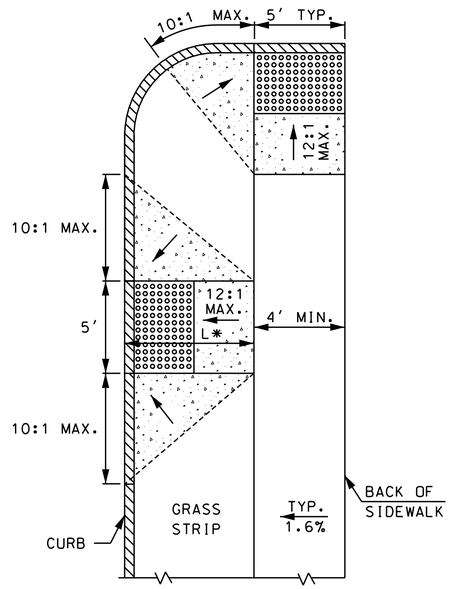

PERPENDICULAR RAMP WITH GRASS PANEL

* LENGTH OF RAMP VARIES WITH SLOPE & WIDTH OF GRASS PANEL

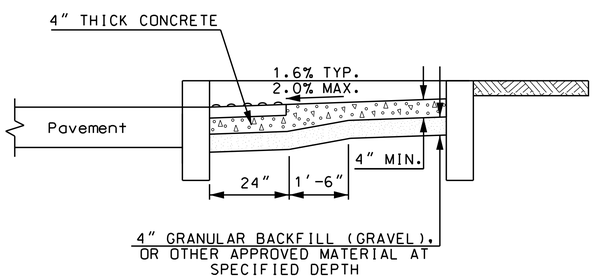

SECTION B-B

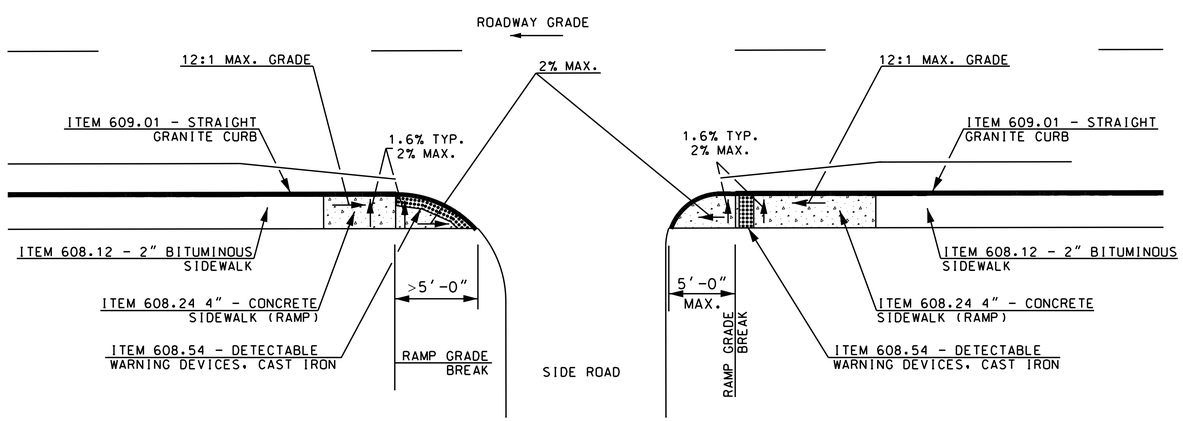

GENERAL NOTES

1. THE MAXIMUM RUNNING SLOPE OF ANY SIDEWALK CURB RAMP IS 12:1. THE MAXIMUM CROSS SLOPE IS 2%. THE SLOPE OF THE LANDING SHALL NOT EXCEED 2% IN ANY DIRECTION.

   RAMP RUNNING SLOPE EXCEPTION: A GREATER THAN 8.33% RAMP RUNNING GRADE IS ALLOWED WHERE THE THE ROADWAY AND THE SIDEWALK(S) ARE PARALLEL AND VERY CLOSE TOGETHER, WITH THE SAME GRADE, AND USING A GRADE OF 8.33% WOULD RESULT IN A RAMP LENGTH LONGER THAN 15'. IN THOSE CIRCUMSTANCES USE A MAXIMUM RAMP LENGTH OF 15'AND THE ALLOWABLE RUNNING SLOPE OF THE RAMP(S) IS GREATER THAN 8.33%.

2. TRANSITIONS SHALL BE FLUSH AND FREE OF ABRUPT CHANGES. ROADWAY SHOULDER SLOPES ADJOINING SIDEWALK CURB RAMPS SHALL BE A MAXIMUM OF 5% (FULL WIDTH) FOR A DISTANCE OF 2 FT. FROM THE ROADWAY CURBLINE.
3. INTERCEPT DRAINAGE ALONG THE CURB IN ADVANCE OF SIDEWALK CURB RAMPS OR LANDINGS. CATCH BASINS, MANHOLES, ETC. SHALL NOT BE LOCATED IN, OR AT THE BASE OF, SIDEWALK CURB RAMPS OR LANDINGS.
4. THE BOTTOM OF THE SIDEWALK CURB RAMP OR LANDING, EXCLUSIVE OF THE FLARED SIDES, SHALL BE WHOLLY CONTAINED WITHIN THE CROSSWALK MARKINGS.
5. THE SURFACE OF A PERPENDICULAR SIDEWALK CURB RAMP OR THE LANDING OF A PARALLEL SIDEWALK CURB RAMP SHALL CONTRAST VISUALLY WITH THE ADJOINING SIDEWALK SURFACE, EITHER ASPHALT/LIGHT-COLORED CONCRETE OR LIGHT-COLORED CONCRETE/DARK-STAINED CONCRETE. THE CONCRETE SURFACE SHALL BE SLIP RESISTANT.
6. DETECTABLE WARNING PANELS SHALL BE THE FULL WIDTH OF THE LANDING, BLENDED TRANSITION, OR CURB RAMP THEY ARE A PART OF AND SHALL BE A MINIMUM OF 2 FEET IN DEPTH. THE ROWS OF TRUNCATED DOMES SHALL BE ALIGNED PERPENDICULAR TO THE GRADE BREAK BETWEEN THE RAMP, BLENDED TRANSITION, OR LANDING AND THE STREET.
7. SAWCUT EXISTING BITUMINOUS SIDEWALK USING ITEM 628.2 - SAWED BITUMINOUS PAVEMENT FOR INSTALLATION OF NEW SIDEWALK RAMPS.
8. EXISTING GROUND OUTSIDE OF SIDEWALK LIMITS THAT IS DISTURBED DURING INSTALLATION OF NEW SIDEWALK RAMPS SHALL BE RE-ESTABLISHED USING ITEMS 203.601 - EMBANKMENT-IN-PLACE, ITEM 647.1 - HUMUS, & ITEM 646.31 - TURF ESTABLISHMENT W/ MULCH & TACKIFIERS.
9. USE ITEM 206.1 - COMMON STRUCTURE EXCAVATION FOR THE REMOVAL OF EXISTING SIDEWALK RAMPS.

THE ORDER OF PREFERENCE FOR LOCATION OF CORNER RAMPS:

1. TWO SEPARATE RAMPS LOCATED ON TANGENT SIDEWALK AREA IMMEDIATELY OUTSIDE OF CORNER RADIUS.
2. TWO SEPARATE RAMPS SEPARATED BY 5' MINIMUM AS SHOWN ABOVE.
3. SINGLE RAMP SERVING TWO CROSSWALKS.

TRANSITION RAMPS:

BLENDED TRANSITIONS HAVE A RUNNING SLOPE GREATER THAN 2% BUT LESS THAN 5%. CURB RAMPS HAVE A RUNNING SLOPE OF 5% MIN. TO 8.33% MAX. SIDEWALK, BLENDED TRANSITIONS, AND CURB RAMPS HAVE A MAX. CROSS SLOPE OF 2%.

ALL GRADE BREAKS BETWEEN LANDINGS, RAMPS, AND BLENDED TRANSITIONS SHALL BE PERPENDICULAR TO THE DIRECTION OF TRAVEL.

IF IT IS NECESSARY TO USE SIDEWALK WIDTHS 5'-0" OR LESS, PROVIDE A WIDENED AREA A MINIMUM OF 5'-0" WIDE BY 5'-0" LONG SPACED AT INTERVALS OF 200' MAXIMUM TO ALLOW FOR USERS TO PASS EACH OTHER.

PROVIDE DETECTABLE WARNING SURFACES ANYTIME THAT A CURB RAMP, BLENDED TRANSITION, OR LANDING CONNECTS TO A STREET. PLACEMENT FOR DETECTABLE WARNING SURFACES ARE AS FOLLOWS:

PERPENDICULAR CURB RAMPS:

WHERE BOTH ENDS OF THE BOTTOM GRADE ARE LESS THAN 5'- 0" FROM THE BACK OF THE CURB, LOCATE THE DETECTABLE WARNING PANELS ON THE RAMP SURFACE AT THE BOTTOM OF THE RAMP. WHERE EITHER END OF THE BOTTOM GRADE IS GREATER THAN 5'-0" FROM THE BACK OF THE CURB, LOCATE THE DETECTABLE WARNINGS AT THE BOTTOM OF THE LANDING.

PARALLEL CURB RAMPS:

LOCATE THE DETECTABLE WARNING SURFACES AT THE BACK OF THE CURB ALONG THE EDGE OF THE LANDING.

FOR BLENDED TRANSITIONS AND LANDINGS:

LOCATE THE DETECTABLE WARNING SURFACES AT THE BACK OF THE CURB.

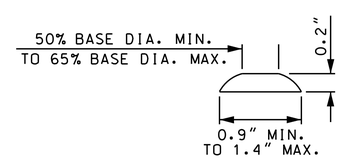

DOME SECTION

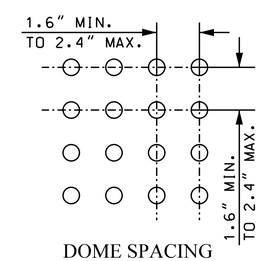

DOME SPACING

STATE OF NEW HAMPSHIRE

DEPARTMENT OF TRANSPORTATION ∘ BUREAU OF HIGHWAY DESIGN

SIDEWALK CURB RAMPS WITH DETECTABLE WARNINGS

DGN	STATE PROJECT NO.	SHEET NO.	TOTAL SHEETS
29533crbrmp	29533	21	46

* 50 FOOT LENGTH IS COMPRISED OF TERMINAL LENGTH PLUS W-BEAM RAIL AS DESCRIBED IN THE APPROPRIATE 606 SPECIAL PROVISION

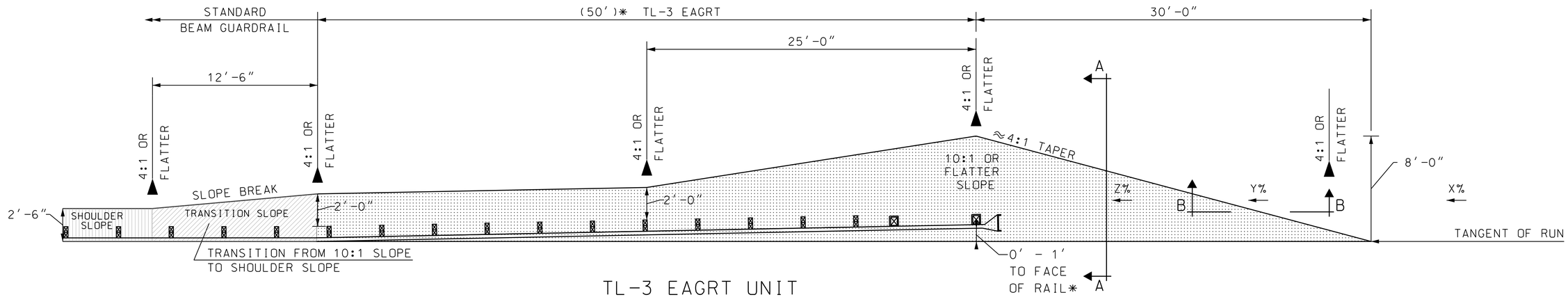

TL-3 EAGRT UNIT

(* DEPENDING ON UNIT, SEE MANUFACTURER REQUIREMENTS)

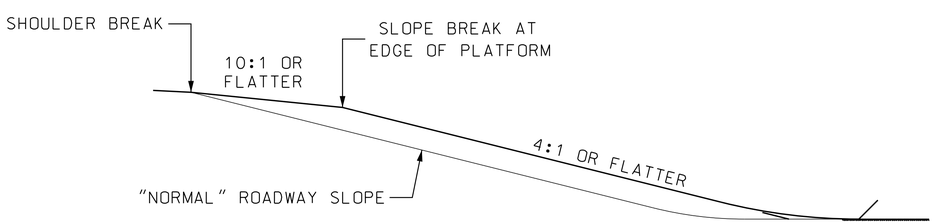

SECTION A-A
PLATFORM SLOPE GRADING

X: LONGITUDINAL GRADE OF ROADWAY SLOPE IN ADVANCE OF PLATFORM
Y: LONGITUDINAL GRADE OF PLATFORM APPROACH
Z: LONGITUDINAL GRADE OF PLATFORM

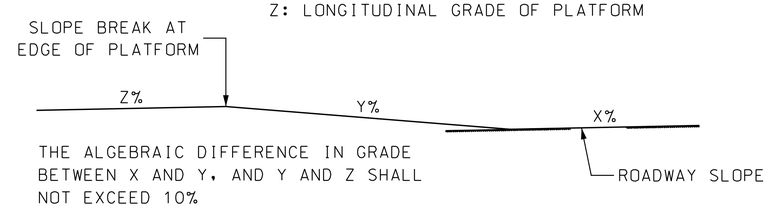

THE ALGEBRAIC DIFFERENCE IN GRADE BETWEEN X AND Y, AND Y AND Z SHALL NOT EXCEED 10%

SECTION B-B
PLATFORM APPROACH GRADING

NOTE:

1. THIS PLATFORM IS INTENDED FOR USE WITH THE ENTIRE GUARDRAIL RUN ALREADY OFFSET 2 FEET OR MORE FROM THE EDGE OF PAVEMENT.

NOT TO SCALE

STATE OF NEW HAMPSHIRE

DEPARTMENT OF TRANSPORTATION ∘ BUREAU OF HIGHWAY DESIGN

PREFERRED PLATFORM FOR ENERGY ABSORBING GUARDRAIL TERMINAL (EAGRT)

DGN	STATE PROJECT NO.	SHEET NO.	TOTAL SHEETS
29533EAGRT	29533	22	46

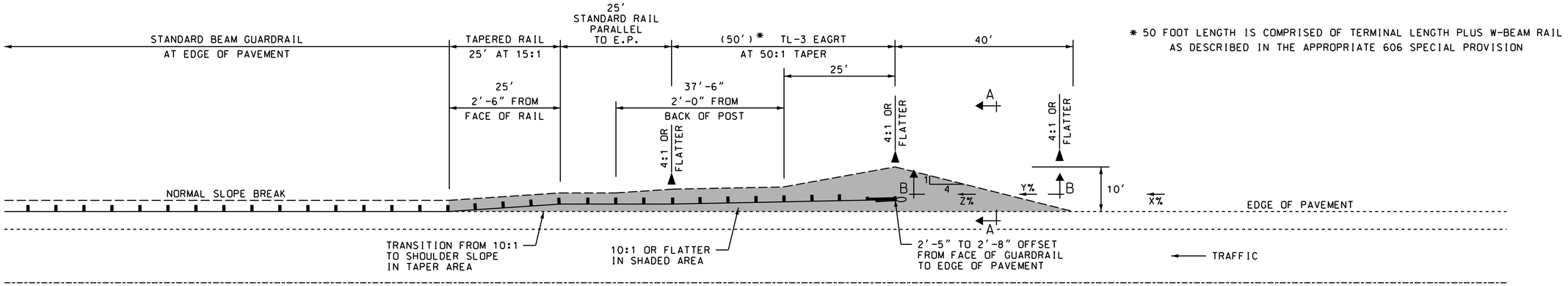

* 50 FOOT LENGTH IS COMPRISED OF TERMINAL LENGTH PLUS W-BEAM RAIL AS DESCRIBED IN THE APPROPRIATE 606 SPECIAL PROVISION

TL-3 EAGRT UNIT

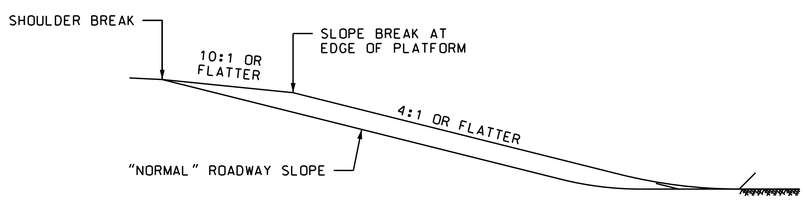

SECTION A-A
PLATFORM SLOPE GRADING

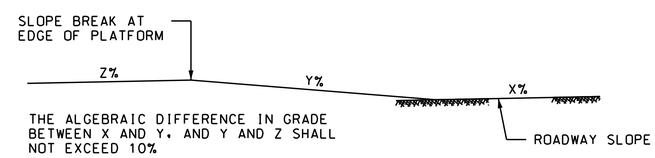

X: LONGITUDINAL GRADE OF ROADWAY SLOPE IN ADVANCE OF PLATFORM
Y: LONGITUDINAL GRADE OF PLATFORM APPROACH
Z: LONGITUDINAL GRADE OF PLATFORM

SECTION B-B
PLATFORM APPROACH GRADING

NOT TO SCALE

STATE OF NEW HAMPSHIRE			
DEPARTMENT OF TRANSPORTATION ∘ BUREAU OF HIGHWAY DESIGN			
PREFERRED PLATFORM FOR OFFSET ENERGY ABSORBING GUARDRAIL TERMINAL (EAGRT)			
DGN	STATE PROJECT NO.	SHEET NO.	TOTAL SHEETS
29533ppo_t13	29533	23	46

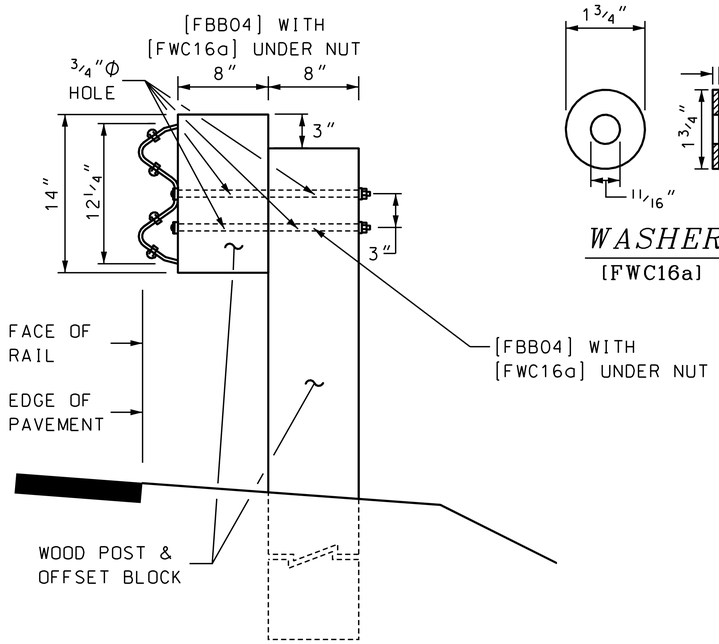

TYPICAL SIDE VIEW

(SHOWN WITH FASTENERS)

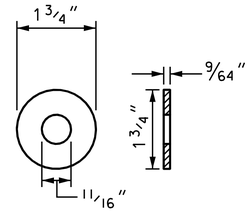

WASHER

[FWC16a]

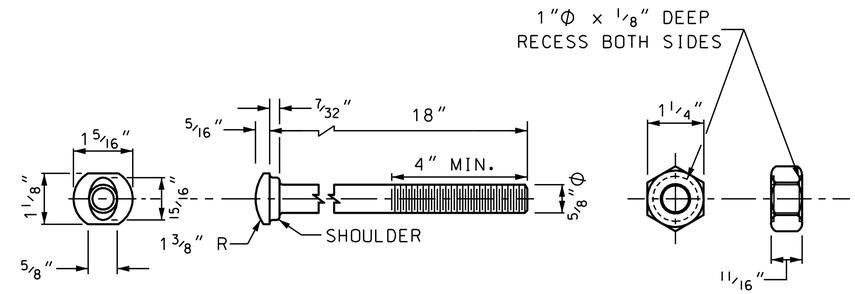

5/8" BUTTON HEAD BOLT AND RECESSED NUT

[FBB04]

GENERAL NOTES

1. THE INTENT OF THIS TREATMENT IS TO RAISE THE RAIL SUCH THAT THERE IS A MINIMUM HEIGHT TO THE TOP OF RAIL OF 27 3/4 INCHES AFTER THE BLOCK IS RESET AND THE RAIL REATTACHED.

2. DESIGNATIONS PROVIDED IN BRACKETS [ ] REFERENCE STANDARD ELEMENTS DETAILED IN *"A GUIDE TO STANDARDIZED HIGHWAY BARRIER HARDWARE"*, 2005, AASHTO-AGC-ARTBA JOINT COOPERATIVE COMMITTEE.

3. ALL DIMENSIONS SUBJECT TO MANUFACTURER'S TOLERANCES.

FIELD NOTES

1. 3/4 " DIA. HOLE IS DRILLED IN POST 3" ON CENTER ABOVE EXISTING MOUNTING HOLE.

2. AN ADDITIONAL 3/4" DIA. HOLE IS IS DRILLED 3" LOWER IN THE BLOCKOUT, TO BE AT THE SAME LOCATION OF THE EXISTING POST BOLT HOLE.

3. BLOCKOUT AND RAIL ARE RESET AND CONNECTED AT THE NEW HOLE AND THE EXISTING HOLE USING EXISTING BOLT AND A NEW BOLT MEETING THE SAME SPECIFICATIONS

4. WHEN TRANSITIONING RAIL HEIGHT TO MEET EXISTING RAIL WITHIN A SINGLE RUN, NEW DRILLED BOLT HOLE CAN BE A MINIMUM OF 2" FROM EXISTING BOLT HOLE. THE REMAINING TRANSITION SHALL BE MADE UP WITHIN THE "PLAY" AT EITHER NEW OR EXISTING BOLT LOCATIONS.

RESET BLOCK AND RAIL ON FIELD DRILLED HOLES

STATE OF NEW HAMPSHIRE

DEPARTMENT OF TRANSPORTATION ∘ BUREAU OF HIGHWAY DESIGN

RESET BLOCK & RAIL
(WOOD POST & WOOD BLOCK-OUT)

REVISION DATE	DGN	STATE PROJECT NO.	SHEET NO.	TOTAL SHEETS
06/04/12	reset_block	29533	24	46

TERMINAL UNIT DELINEATION

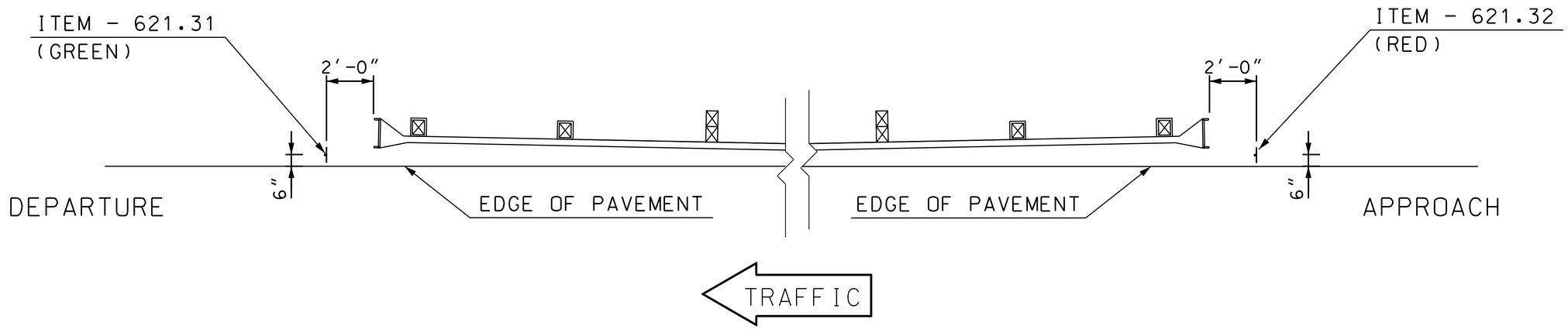

ITEM - 621.31
SINGLE DELINEATOR
WITH POST

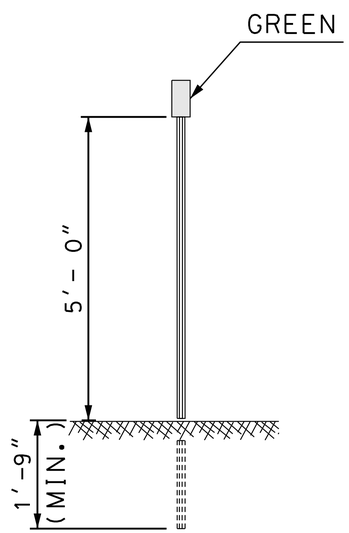

ITEM - 621.32
DOUBLE DELINEATOR
WITH POST

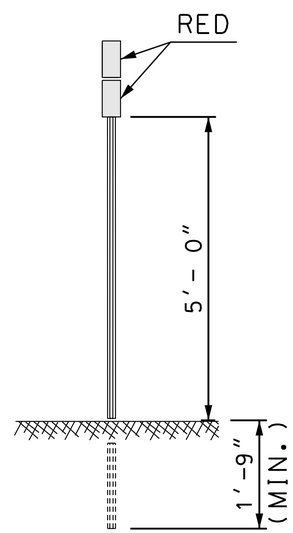

TYPICAL INSTALLATION

STATE OF NEW HAMPSHIRE			
DEPARTMENT OF TRANSPORTATION ∘ BUREAU OF HIGHWAY DESIGN			
TERMINAL UNIT DELINEATION			
DGN	STATE PROJECT NO.	SHEET NO.	TOTAL SHEETS
term_unit_delin	29533	25	46

n34clb"

PAVEMENT MARKING NOTES

1. ALL PAVEMENT MARKINGS NEW THROUGHOUT COMPLETE LENGTH OF PROJECT. PAVEMENT MARKINGS NOT SHOWN ON PLAN ARE TO BE REPLACED AS EXISTING PER NHDOT STANDARDS AND MUTCD 2009 EDITION.
2. ALL SYMBOLS, WORDS, TRANSVERSE MARKINGS (STOP BARS, AND CROSSWALK LINES), LANE LINES AND ALL OTHER MARKINGS NOTED WITH (T), SHALL BE THERMOPLASTIC.
3. REPLACE WORDS/SYMBOLS PER LATEST NHDOT STANDARD PLAN SHEETS.
4. PAVEMENT MARKINGS SHALL EXTEND BEYOND PROJECT PAVING LIMITS AS DIRECTED TO OVERLAP EXISTING MARKINGS DISTURBED BY CONSTRUCTION.

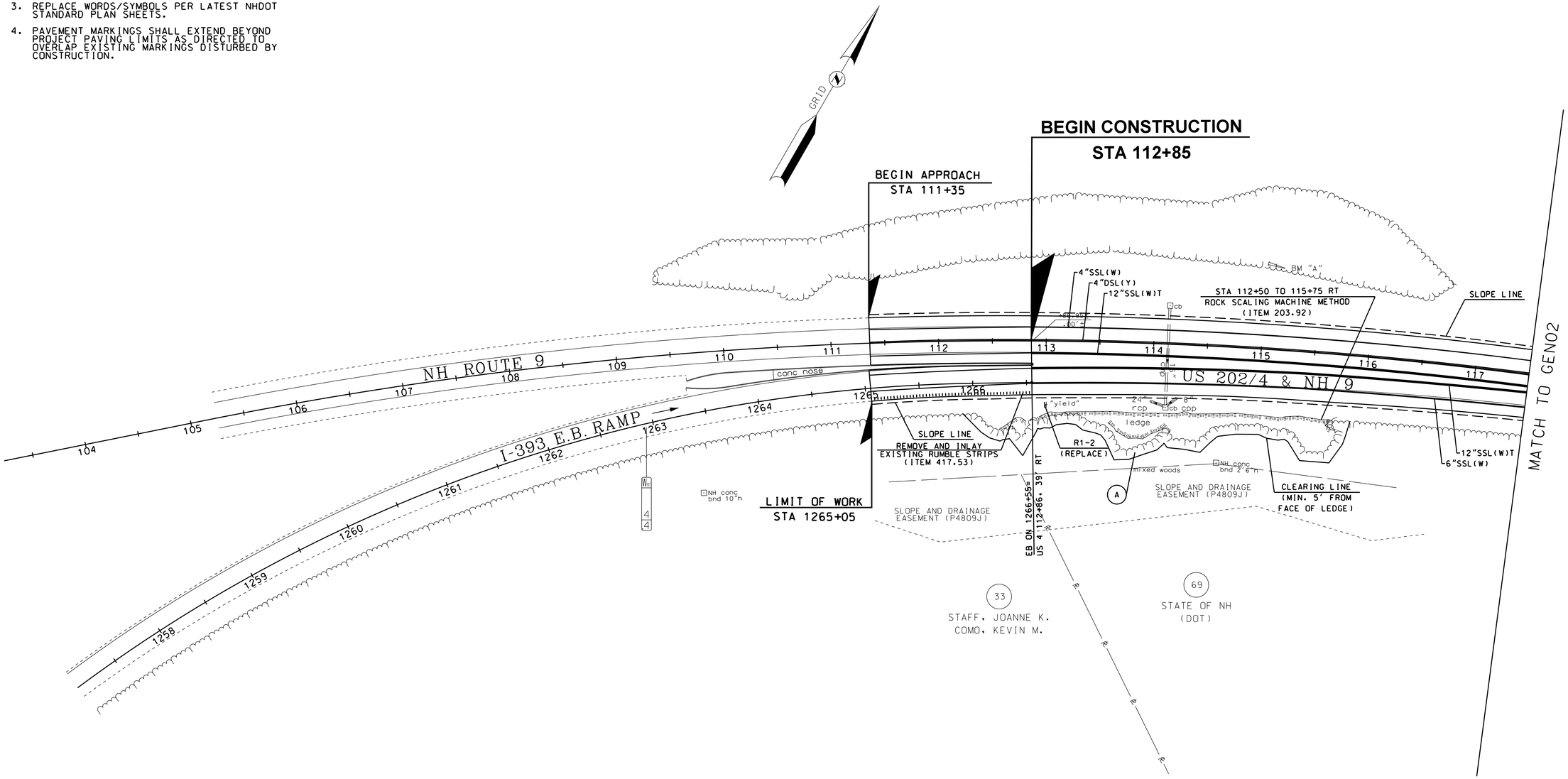

50 0 50 100
SCALE IN FEET

REVISIONS AFTER PROPOSAL

NUMBER	DATE	STATION	STATION	DESCRIPTION

SDR PROCESSED SEL DATE 10/16/15
NEW DESIGN M.TUTTLE DATE 10/2015
SHEET CHECKED SLM DATE 05/2016

AS BUILT DETAILS DATE

STATE OF NEW HAMPSHIRE

DEPARTMENT OF TRANSPORTATION ∘ BUREAU OF HIGHWAY DESIGN

GENERAL PLANS

MODEL	DGN	STATE PROJECT NO.	SHEET NO.	TOTAL SHEETS
GEN01	29533genplans	29533	26	46

LIMIT OF WORK
STA 1276+80

REMOVE AND INLAY EXISTING RUMBLE STRIPS (ITEM 417.53)

D9-2
M6-2(1)R
(REPLACE ON EXISTING POST)

END 4"SSL(W)
BEGIN 12"SSL(W)

WB OFF 1278+30=
US 4 123+00, 54' LT

W8-15
W8-15P
(REPLACE)

GRID

PEMBROKE
CHICHESTER

END 6"SSL(W)
BEGIN 4"SSL(W)

PAVE TURNAROUND (STA 128+00 TO 130+00 LT)
WITH 1.5" OVERLAY USING ITEM 403.11001 -
HOT BIT. PAVEMENT. MACH. METHOD (OC/OA TIER 1).
(APPROX. 20' WIDE)

(REMOVE)
OH CANTILEVER
SIGN & STRUCTURE
(615.20301)

(2)R5-10B1
(REPLACE)

GA-01
(NEW)

W11-B5
W7-3oP
(REPLACE)

MATCH TO GEN03

MATCH TO GEN01

I-393 W.B RAMP

1274 1275 1276 1277 1278

4"SSL(W)
4"DSL(Y)
12"SSL(W)T
6"SBL(W)
12"SSL(W)T
6"SSL(W)

6"SSL(W)

GO-06
(RETAIN)

SLOPE LINE

GO-01
(RETAIN)

GO-05
(RETAIN)

SLOPE LINE

W6-3
W6-3b
(REPLACE)

I-20(1)
(REPLACE)

I-20(2)
(REPLACE)

12"SSL(W)T
4"DSL(Y)

US 202/4 & NH 9

118 119 120 121 122 123 124 125 126 127 128 129 130 131

asphalt parking

Super Shoes

50 0 50 100
SCALE IN FEET

REVISIONS AFTER PROPOSAL			
NUMBER	DATE	STATION	STATION

DESCRIPTION

SDR PROCESSED	SEL	DATE 10/16/15
NEW DESIGN	M.TUTTLE	DATE 10/2015
SHEET CHECKED	SLM	DATE 05/2016
AS BUILT DETAILS		DATE

STATE OF NEW HAMPSHIRE

DEPARTMENT OF TRANSPORTATION ∘ BUREAU OF HIGHWAY DESIGN

GENERAL PLANS

MODEL	DGN	STATE PROJECT NO.	SHEET NO.	TOTAL SHEETS
GEN02	29533genplans	29533	27	46

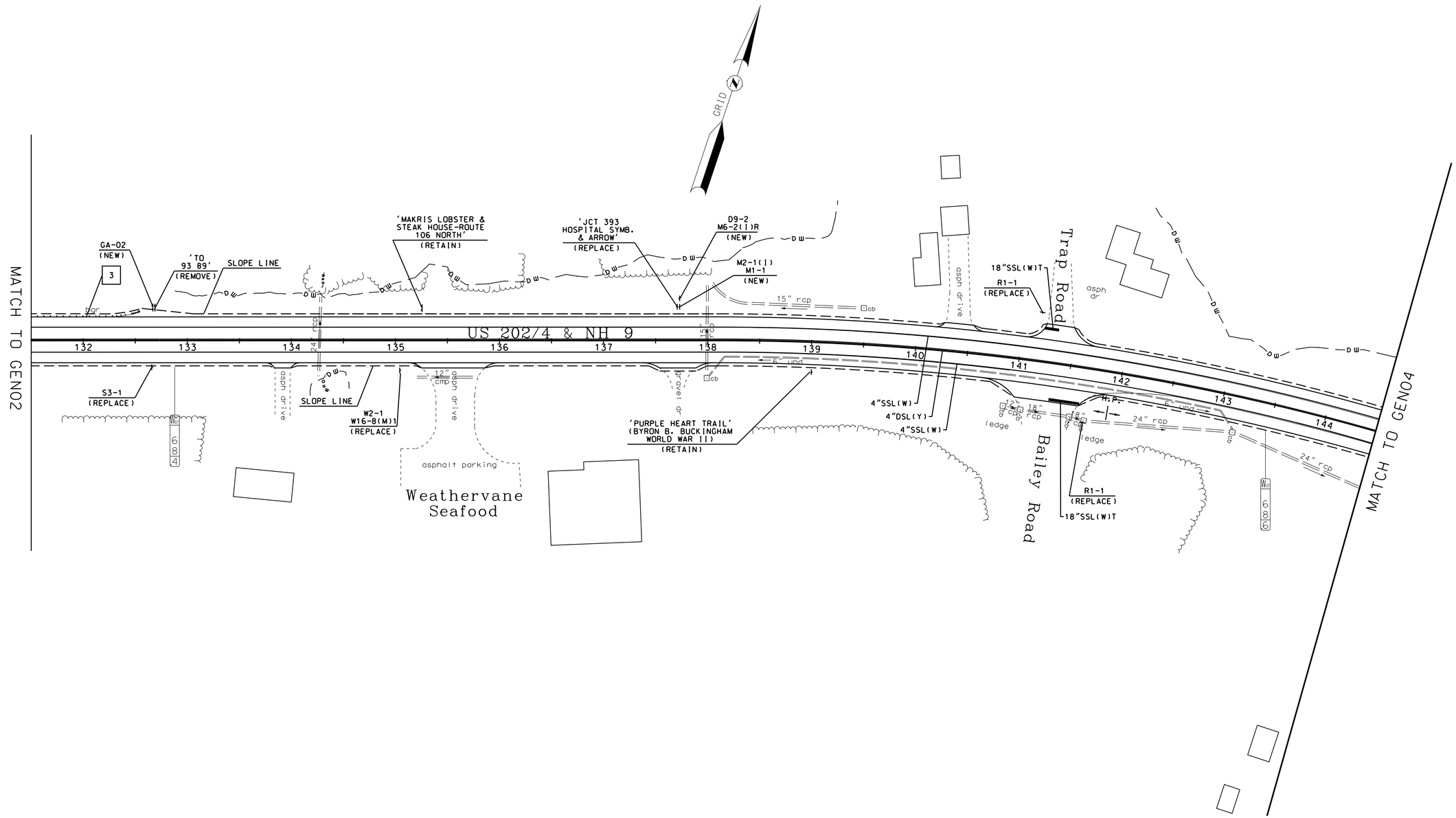

50 0 50 100

SCALE IN FEET

REVISIONS AFTER PROPOSAL			
STATION	STATION	DESCRIPTION	

NUMBER	DATE

SDR PROCESSED	SEL	DATE	10/16/15
NEW DESIGN	M. TUTTLE	DATE	10/2015
SHEET CHECKED	SLM	DATE	05/2016
AS BUILT DETAILS		DATE	

STATE OF NEW HAMPSHIRE

DEPARTMENT OF TRANSPORTATION ∘ BUREAU OF HIGHWAY DESIGN

GENERAL PLANS

MODEL	DGN	STATE PROJECT NO.	SHEET NO.	TOTAL SHEETS
GEN03	29533genplans	29533	28	46

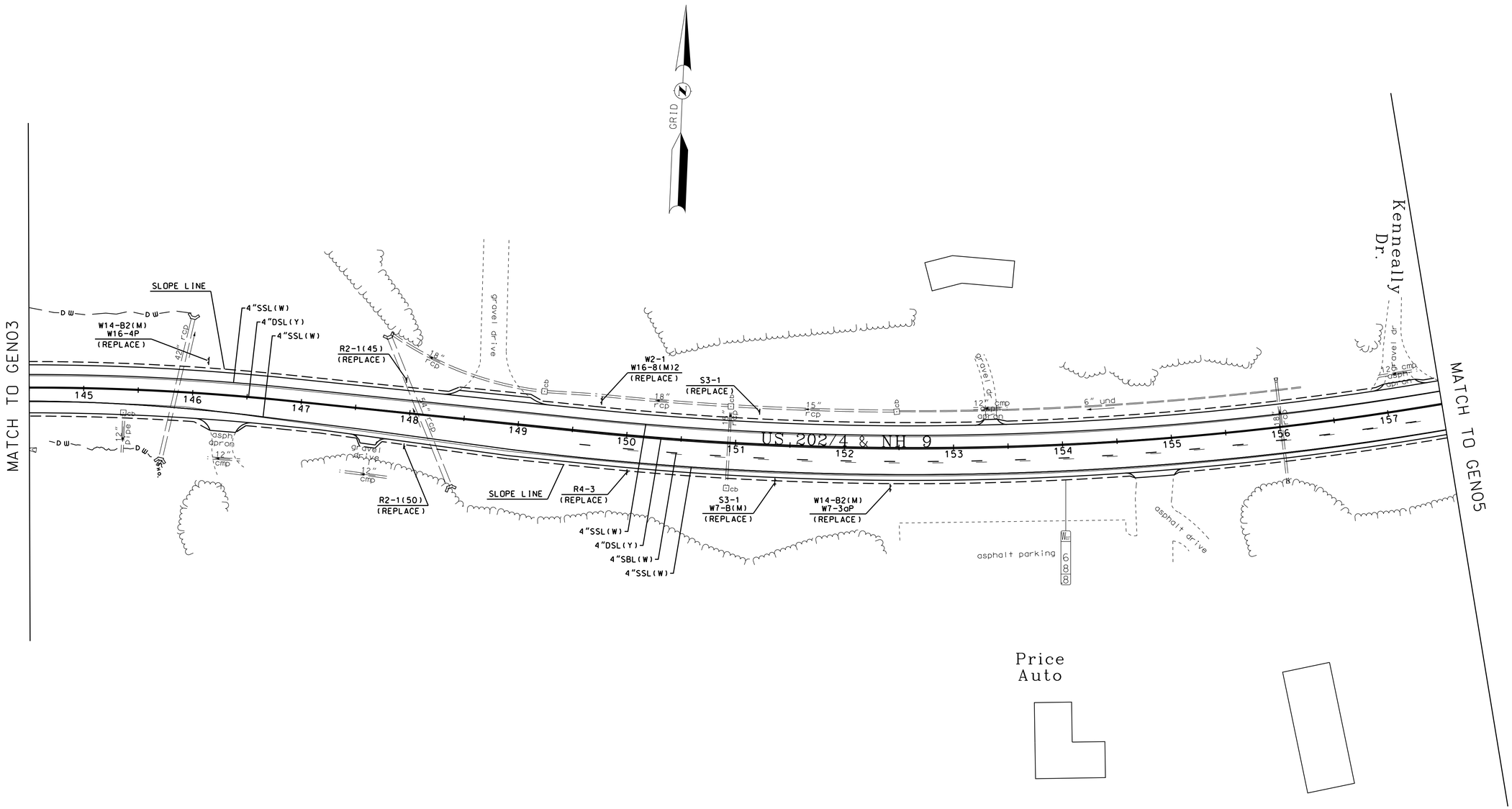

REVISIONS AFTER PROPOSAL			
NUMBER	DATE	STATION	DESCRIPTION

SDR PROCESSED	SEL	DATE 10/16/15
NEW DESIGN	M. TUTTLE	DATE 10/2015
SHEET CHECKED	SLM	DATE 05/2016
AS BUILT DETAILS		DATE

STATE OF NEW HAMPSHIRE

DEPARTMENT OF TRANSPORTATION ∘ BUREAU OF HIGHWAY DESIGN

GENERAL PLANS

MODEL	DGN	STATE PROJECT NO.	SHEET NO.	TOTAL SHEETS
GEN04	29533genplans	29533	29	46

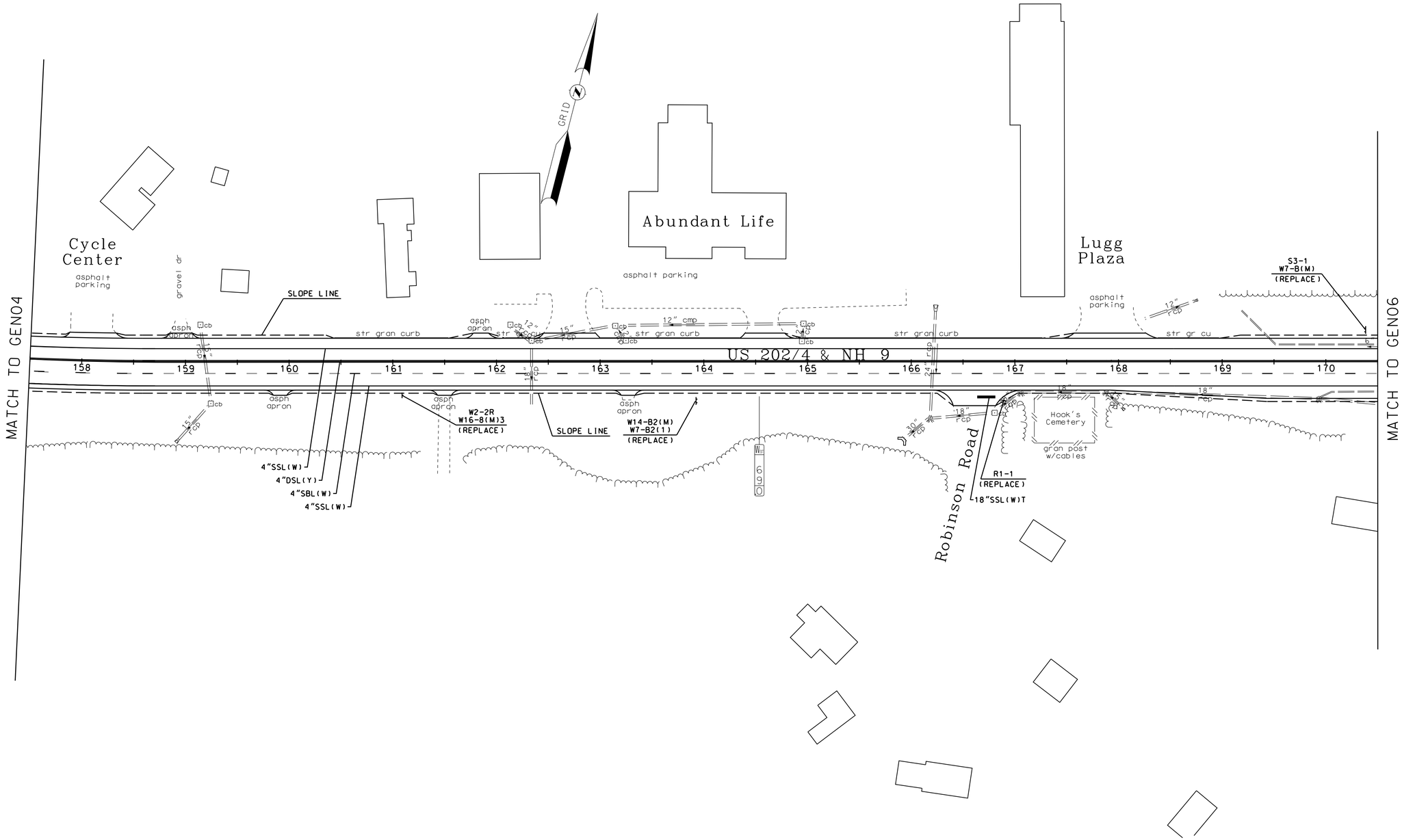

NUMBER	DATE	DESCRIPTION	STATION	STATION
		REVISIONS AFTER PROPOSAL		

SDR PROCESSED SEL DATE 10/16/15
NEW DESIGN M. TUTTLE DATE 10/2015
SHEET CHECKED SLM DATE 05/2016

AS BUILT DETAILS DATE

STATE OF NEW HAMPSHIRE

DEPARTMENT OF TRANSPORTATION ∘ BUREAU OF HIGHWAY DESIGN

GENERAL PLANS

MODEL	DGN	STATE PROJECT NO.	SHEET NO.	TOTAL SHEETS
GEN05	29533genplans	29533	30	46

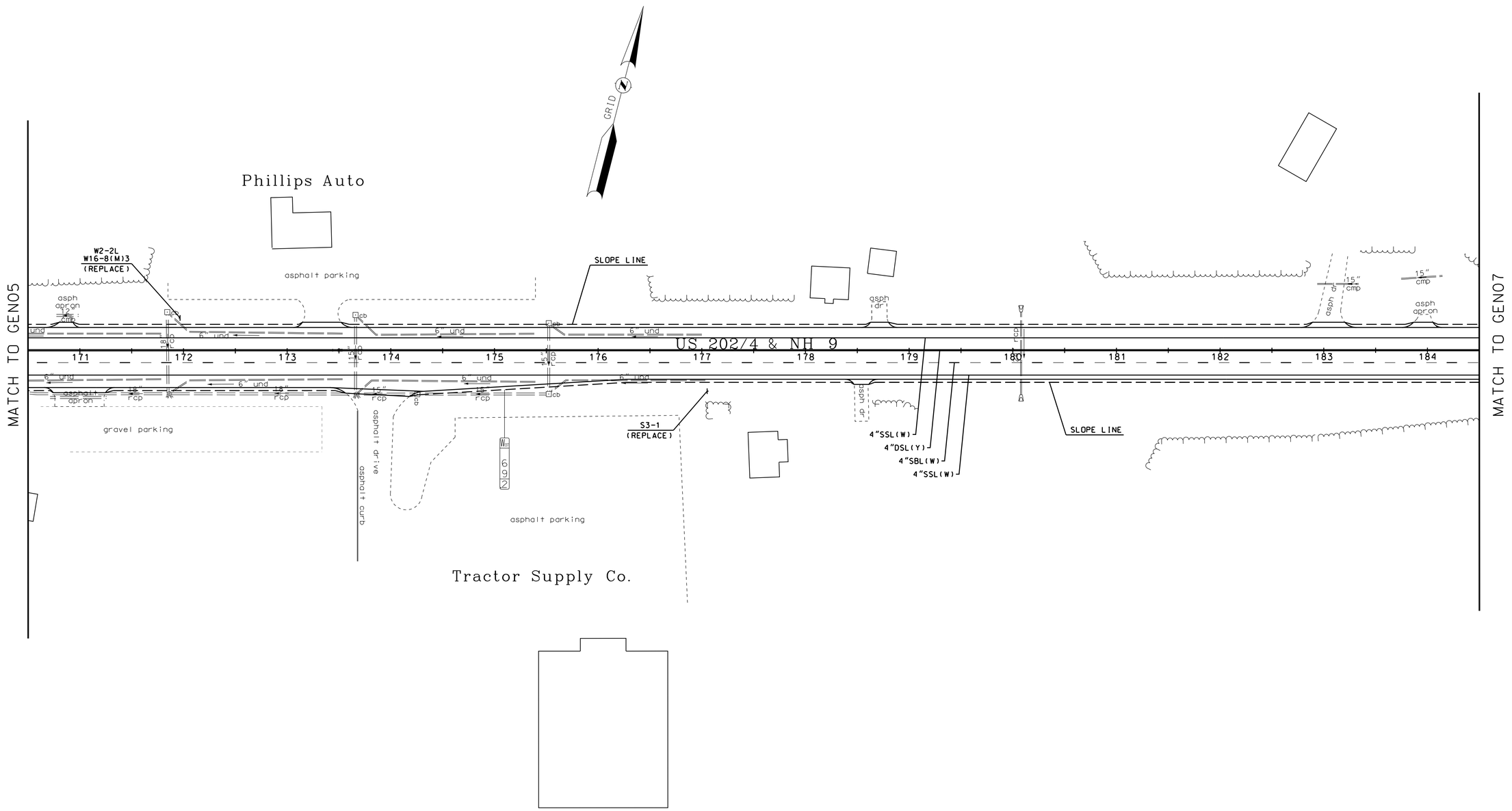

50 0 50 100

SCALE IN FEET

REVISIONS AFTER PROPOSAL

NUMBER	DATE	STATION	STATION	DESCRIPTION

SDR PROCESSED	SEL	DATE 10/16/15
NEW DESIGN	M. TUTTLE	DATE 10/2015
SHEET CHECKED	SLM	DATE 05/2016
AS BUILT DETAILS		DATE

STATE OF NEW HAMPSHIRE

DEPARTMENT OF TRANSPORTATION ∘ BUREAU OF HIGHWAY DESIGN

GENERAL PLANS

MODEL	DGN	STATE PROJECT NO.	SHEET NO.	TOTAL SHEETS
GEN06	29533genplans	29533	31	46

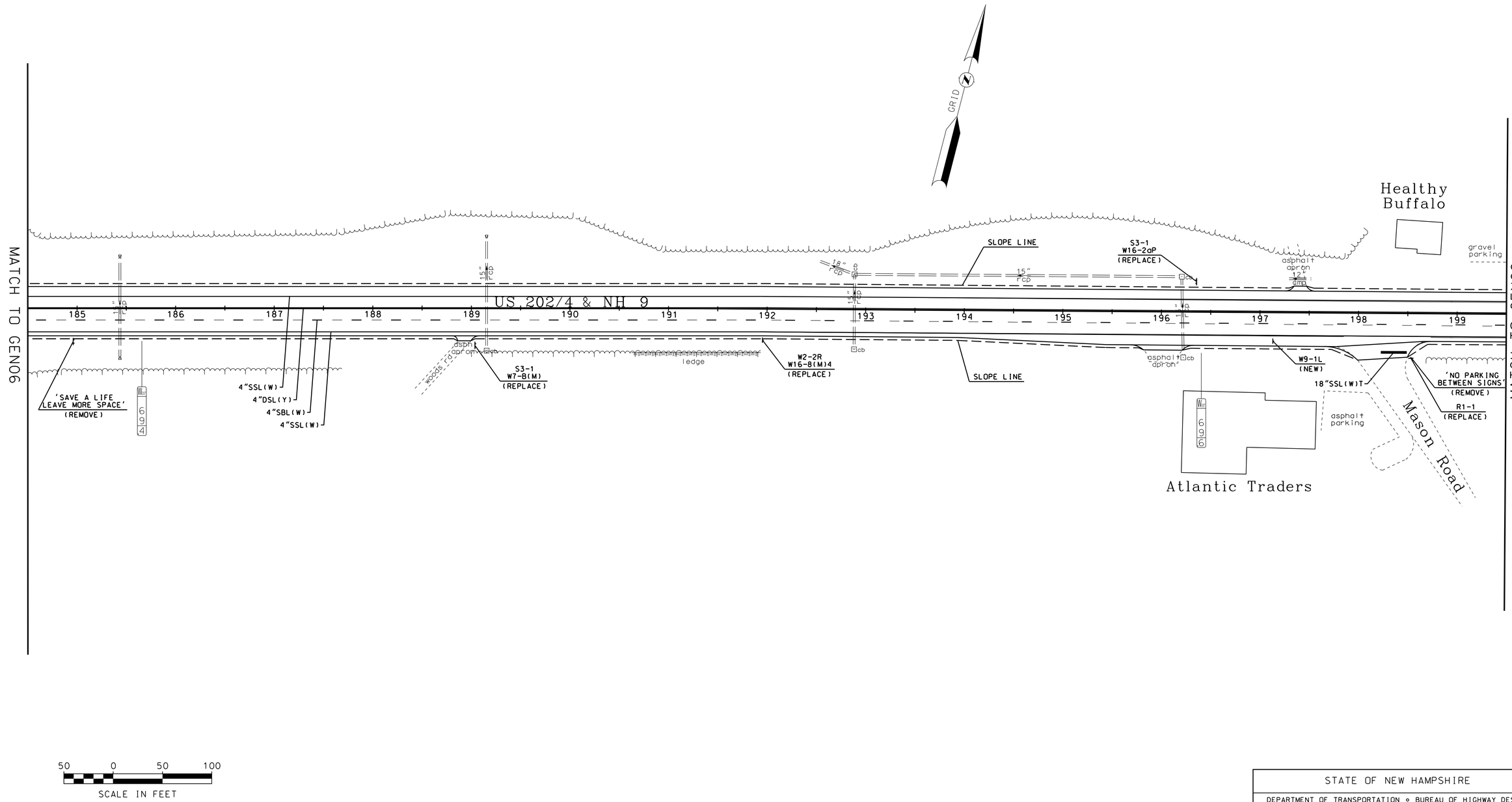

50 0 50 100

SCALE IN FEET

REVISIONS AFTER PROPOSAL			
NUMBER	DATE	STATION	STATION	DESCRIPTION

SDR PROCESSED	SEL	DATE	10/16/15
NEW DESIGN	M.TUTTLE	DATE	10/2015
SHEET CHECKED	SLM	DATE	05/2016
AS BUILT DETAILS		DATE	

STATE OF NEW HAMPSHIRE

DEPARTMENT OF TRANSPORTATION ∘ BUREAU OF HIGHWAY DESIGN

GENERAL PLANS

MODEL	DGN	STATE PROJECT NO.	SHEET NO.	TOTAL SHEETS
GEN07	29533genplans	29533	32	46

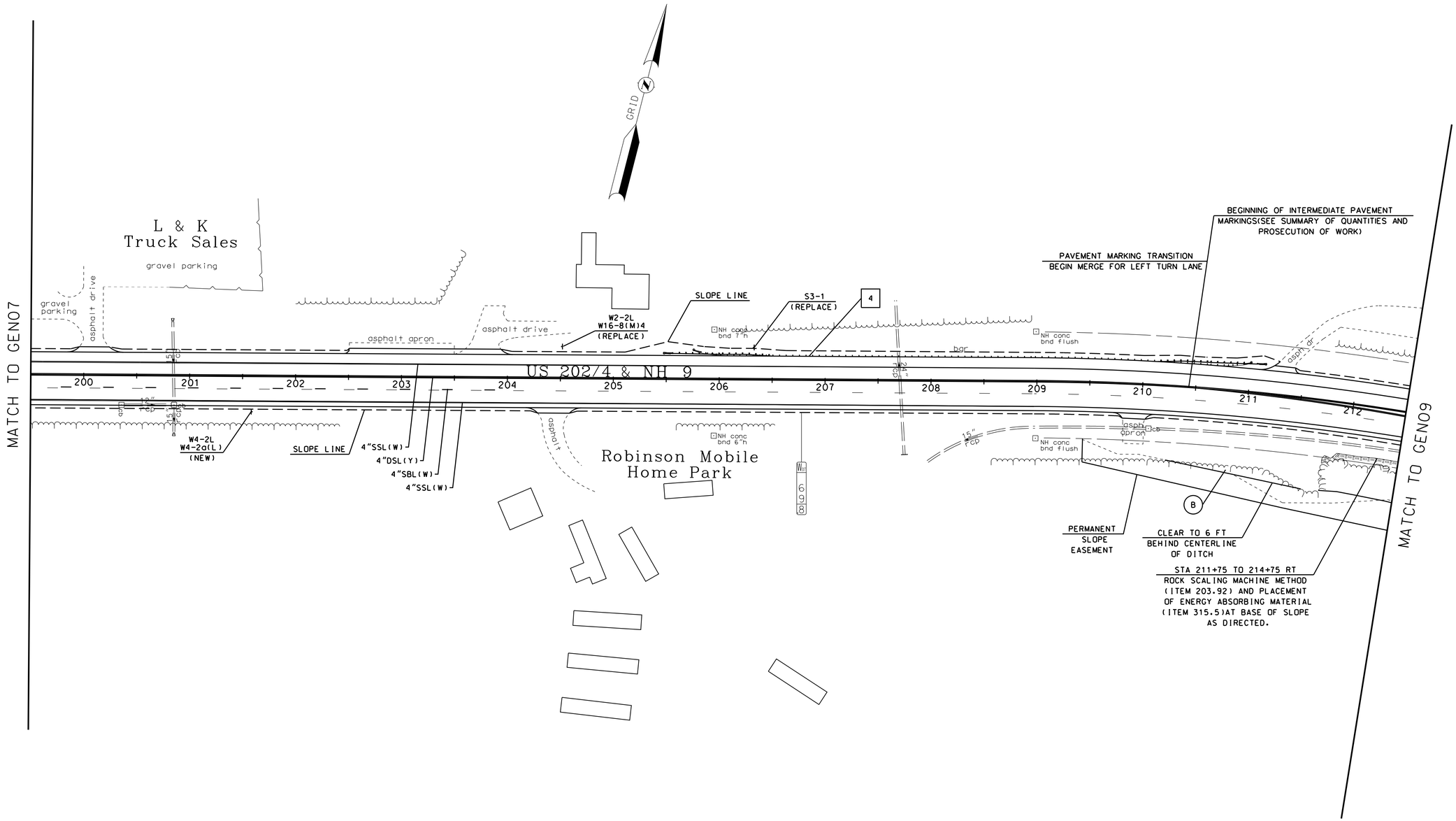

50 0 50 100

SCALE IN FEET

REVISIONS AFTER PROPOSAL

NUMBER	DATE	STATION	STATION	DESCRIPTION

SDR PROCESSED	SEL	DATE 10/16/15
NEW DESIGN	M.TUTTLE	DATE 10/2015
SHEET CHECKED	SLM	DATE 05/2016
AS BUILT DETAILS		DATE

STATE OF NEW HAMPSHIRE

DEPARTMENT OF TRANSPORTATION ∘ BUREAU OF HIGHWAY DESIGN

GENERAL PLANS

MODEL	DGN	STATE PROJECT NO.	SHEET NO.	TOTAL SHEETS
GEN08	29533genplans	29533	33	46

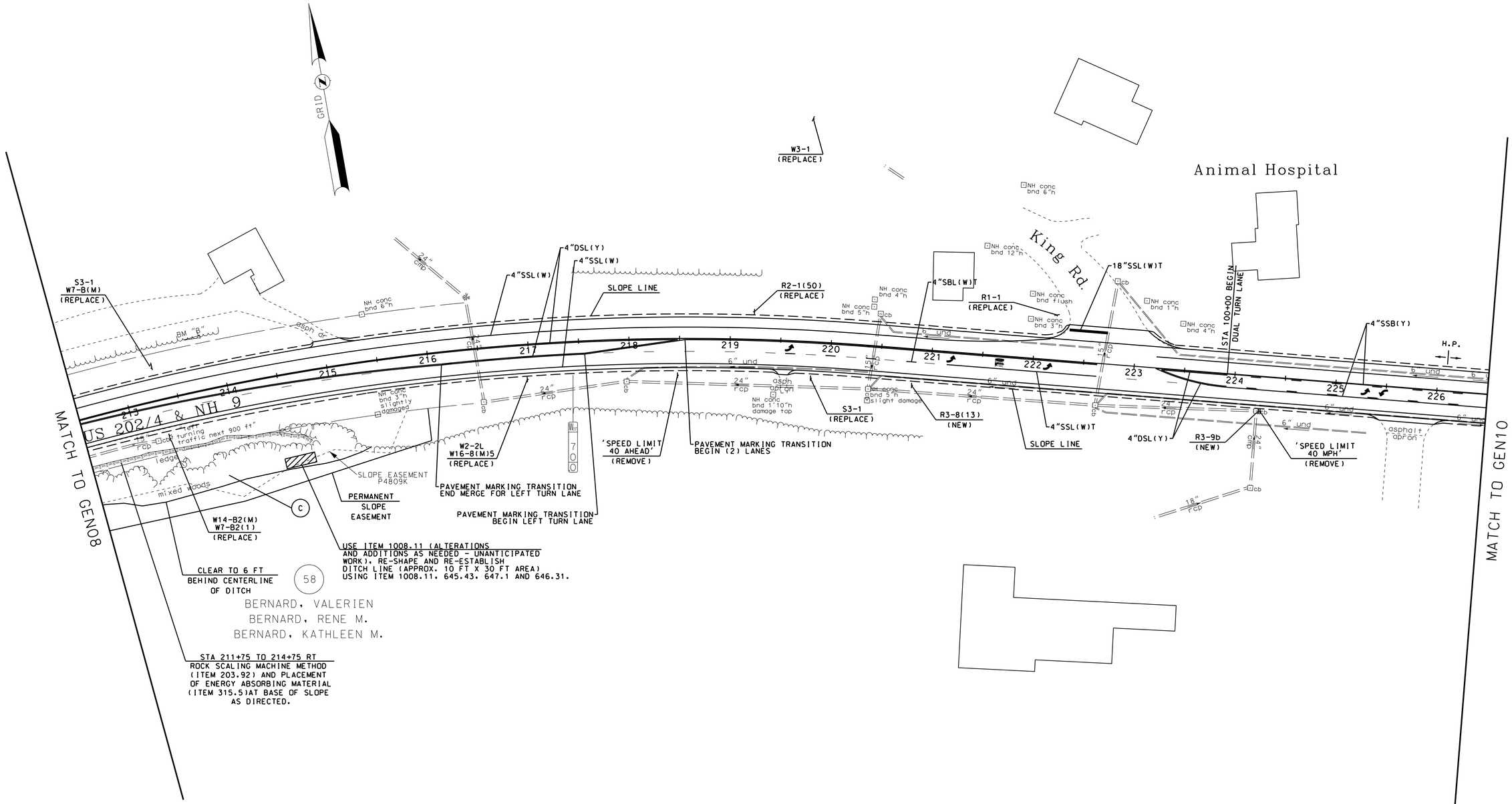

REVISIONS AFTER PROPOSAL			
NUMBER	DATE	STATION	DESCRIPTION

SDR PROCESSED	SEL	DATE	10/16/15
NEW DESIGN	M.TUTTLE	DATE	10/2015
SHEET CHECKED	SLM	DATE	05/2016
AS BUILT DETAILS		DATE	

STATE OF NEW HAMPSHIRE

DEPARTMENT OF TRANSPORTATION ∘ BUREAU OF HIGHWAY DESIGN

GENERAL PLANS

MODEL	DGN	STATE PROJECT NO.	SHEET NO.	TOTAL SHEETS
GEN09	29533genplans	29533	34	46

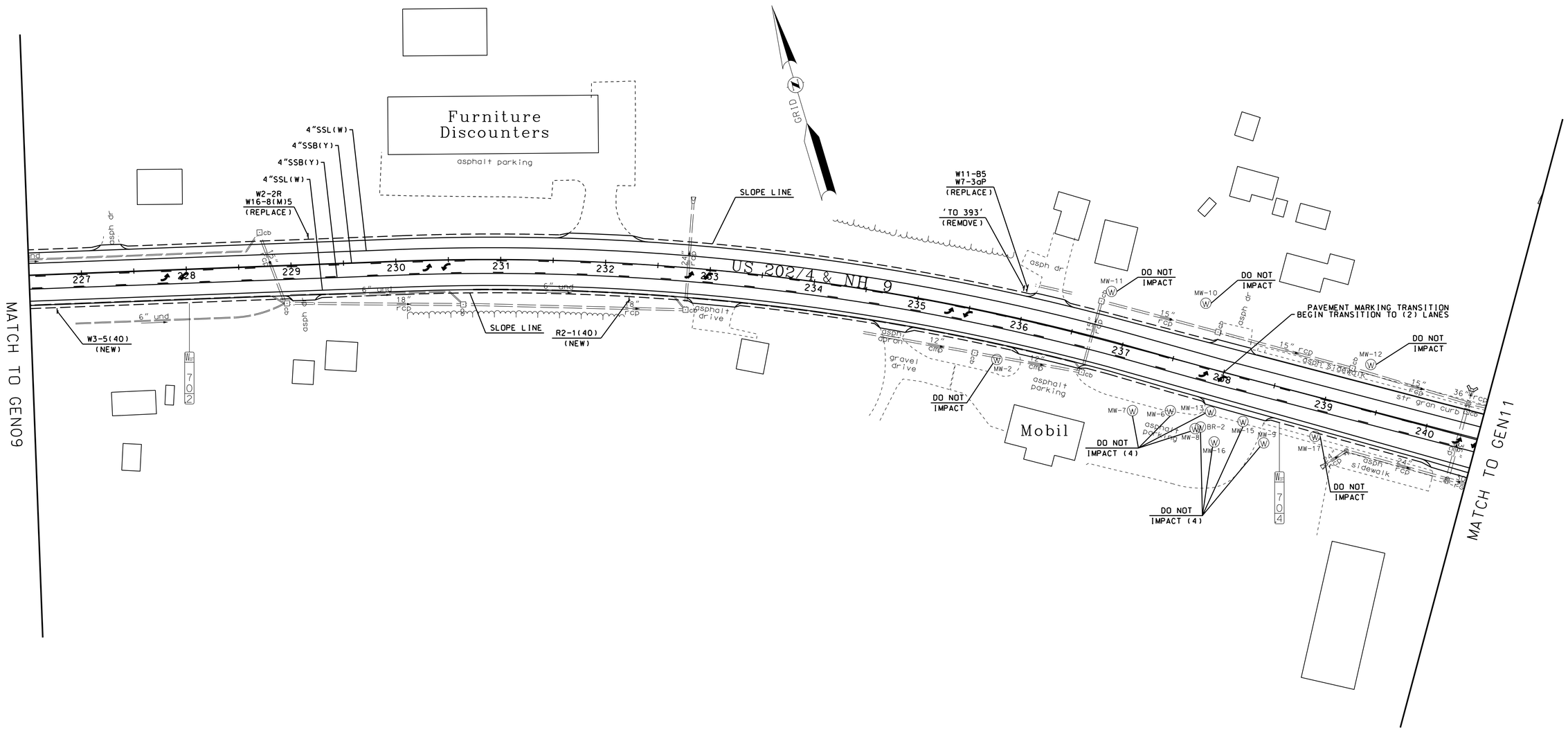

50 0 50 100

SCALE IN FEET

NUMBER	DATE	DESCRIPTION	STATION	STATION
		REVISIONS AFTER PROPOSAL		

SDR PROCESSED SEL DATE 10/16/15

NEW DESIGN M.TUTTLE DATE 10/2016

SHEET CHECKED SLM DATE 05/2016

AS BUILT DETAILS DATE

STATE OF NEW HAMPSHIRE

DEPARTMENT OF TRANSPORTATION ∘ BUREAU OF HIGHWAY DESIGN

GENERAL PLANS

MODEL	DGN	STATE PROJECT NO.	SHEET NO.	TOTAL SHEETS
GEN10	29533genplans	29533	35	46

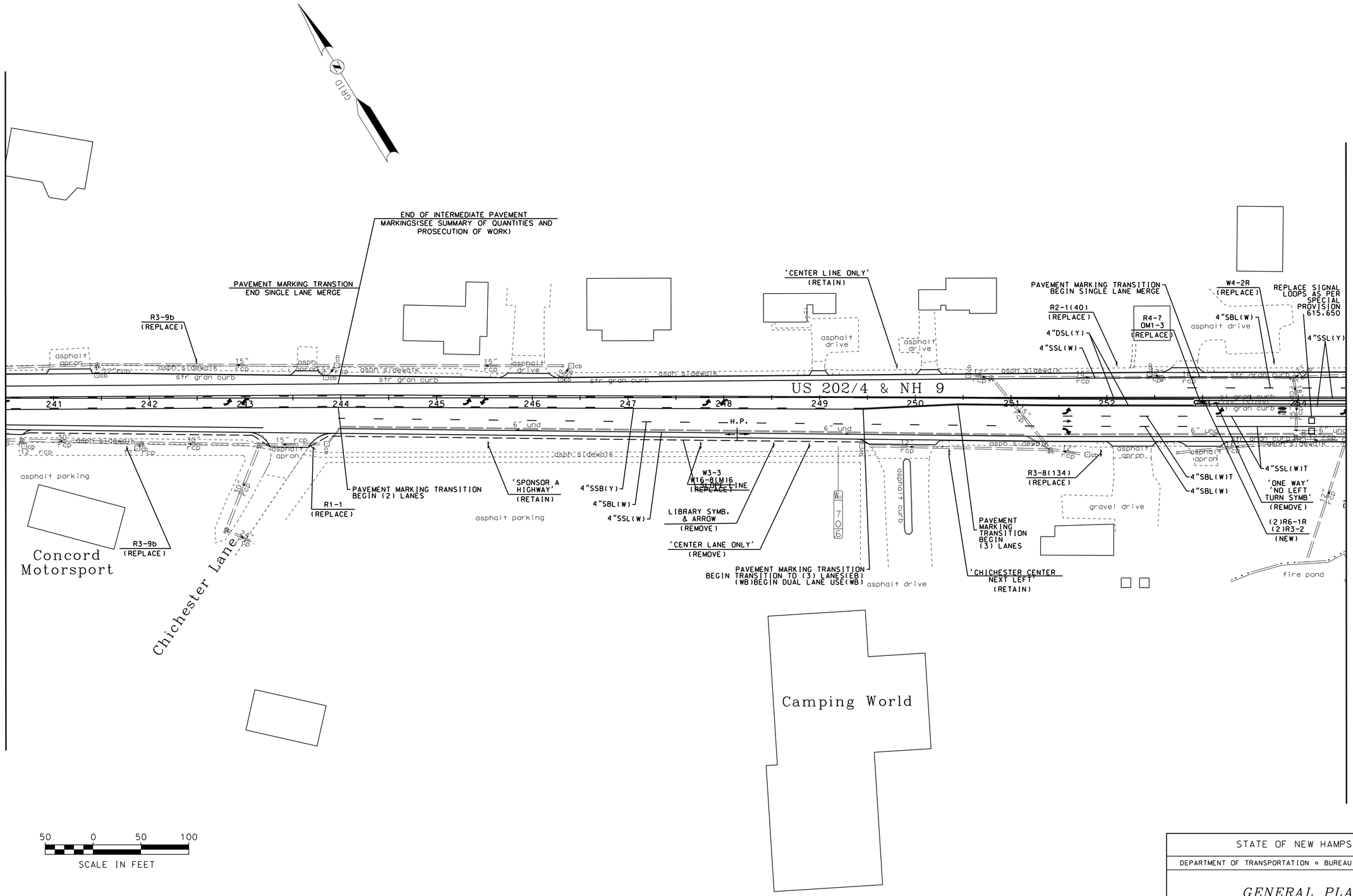

REVISIONS AFTER PROPOSAL

NUMBER	DATE	STATION	STATION	DESCRIPTION

SDR PROCESSED	SEL	DATE	10/16/15
NEW DESIGN	M.TUTTLE	DATE	10/2015
SHEET CHECKED	SLM	DATE	05/2016
AS BUILT DETAILS		DATE	

STATE OF NEW HAMPSHIRE

DEPARTMENT OF TRANSPORTATION ∘ BUREAU OF HIGHWAY DESIGN

GENERAL PLANS

MODEL	DGN	STATE PROJECT NO.	SHEET NO.	TOTAL SHEETS
GEN11	29533genplans	29533	36	46

NOTE:
ALL MAST ARM SIGNS TO BE RETAINED

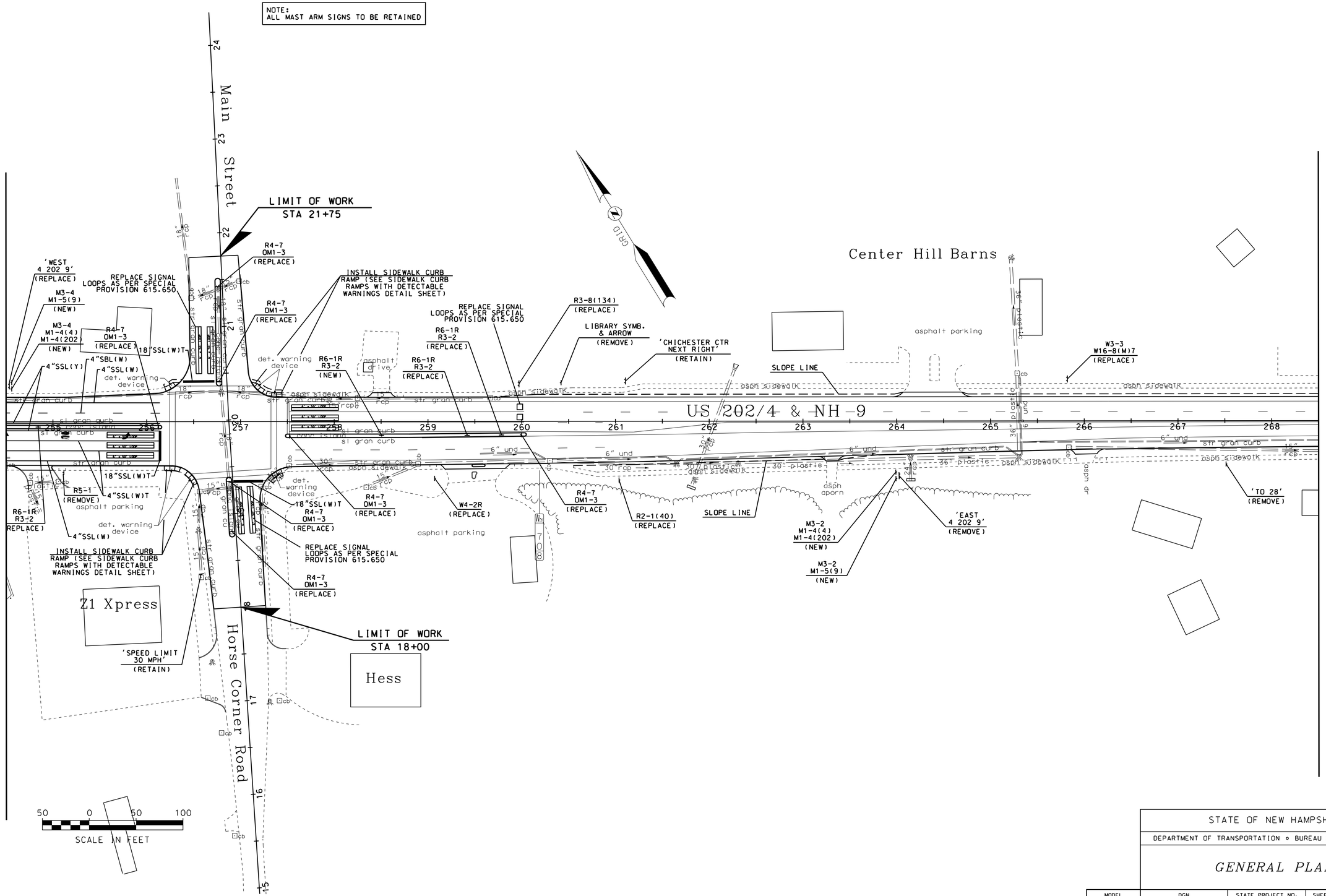

NUMBER	DATE	STATION	DESCRIPTION

REVISIONS AFTER PROPOSAL

SDR PROCESSED	SEL	DATE	10/16/15
NEW DESIGN	M. TUTTLE	DATE	10/2015
SHEET CHECKED	SLM	DATE	05/2016
AS BUILT DETAILS		DATE	

STATE OF NEW HAMPSHIRE

DEPARTMENT OF TRANSPORTATION • BUREAU OF HIGHWAY DESIGN

GENERAL PLANS

MODEL	DGN	STATE PROJECT NO.	SHEET NO.	TOTAL SHEETS
GEN12	29533genplans	29533	37	46

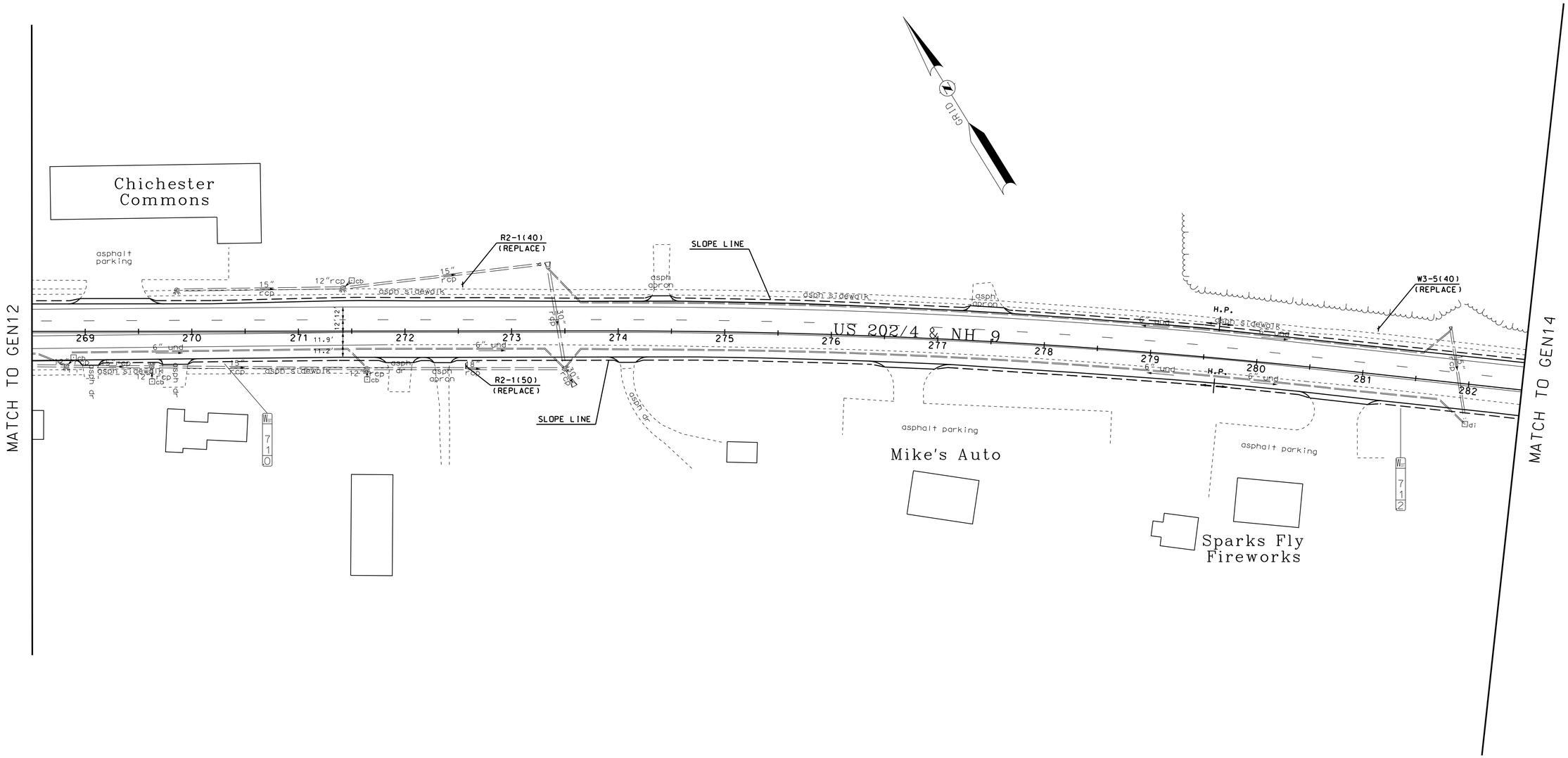

REVISIONS AFTER PROPOSAL

NUMBER	DATE	STATION	STATION	DESCRIPTION

SDR PROCESSED SEL DATE 10/16/15
NEW DESIGN M. TUTTLE DATE 10/2015
SHEET CHECKED SLM DATE 05/2016

AS BUILT DETAILS DATE

STATE OF NEW HAMPSHIRE

DEPARTMENT OF TRANSPORTATION ∘ BUREAU OF HIGHWAY DESIGN

GENERAL PLANS

MODEL	DGN	STATE PROJECT NO.	SHEET NO.	TOTAL SHEETS
GEN13	29533genplans	29533	38	46

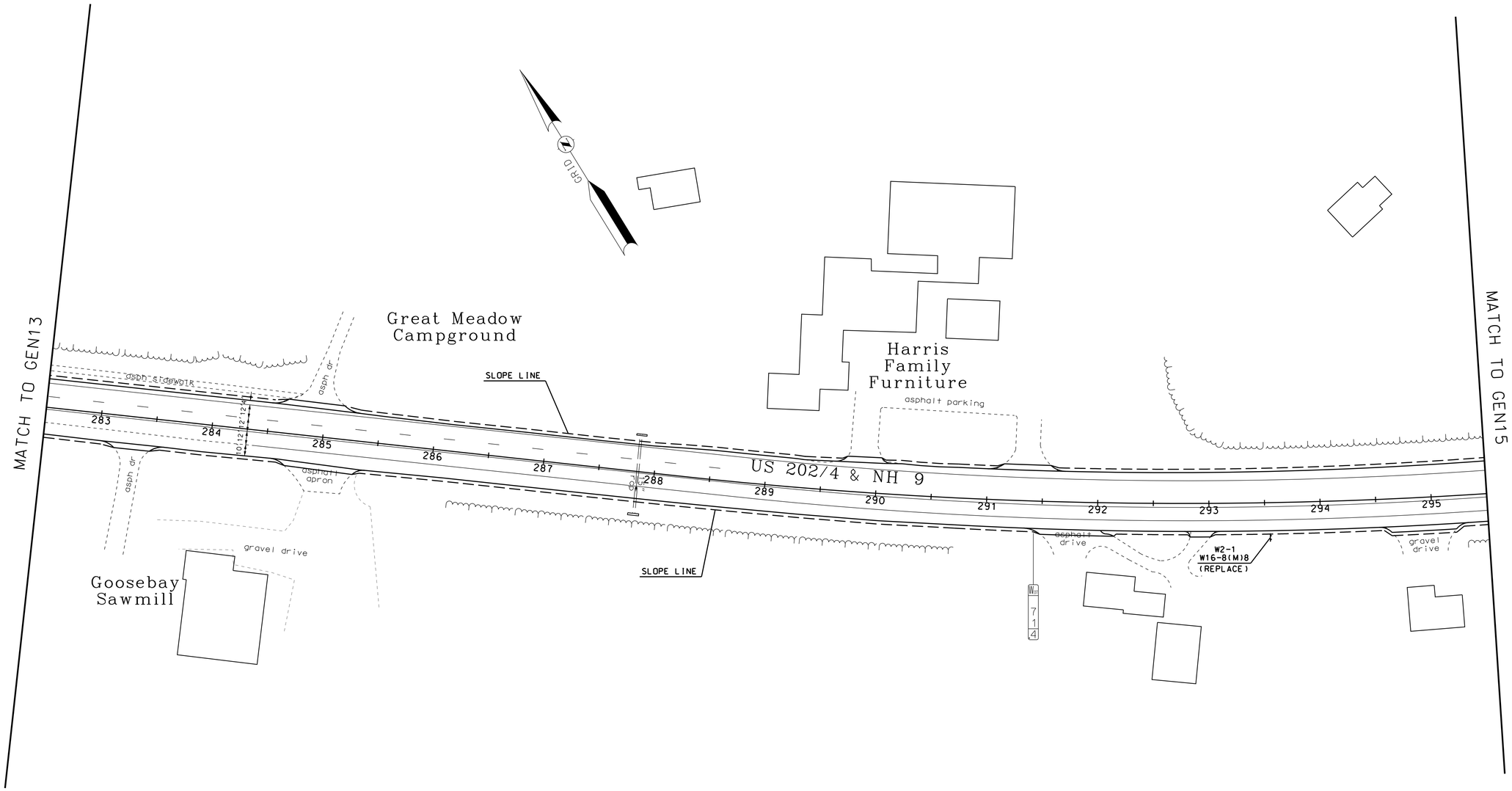

50 0 50 100
SCALE IN FEET

REVISIONS AFTER PROPOSAL			
NUMBER	DATE	STATION	DESCRIPTION

SDR PROCESSED	SEL	DATE	10/16/15
NEW DESIGN	M.TUTTLE	DATE	10/2015
SHEET CHECKED	SLM	DATE	05/2016
AS BUILT DETAILS		DATE	

STATE OF NEW HAMPSHIRE

DEPARTMENT OF TRANSPORTATION ∘ BUREAU OF HIGHWAY DESIGN

GENERAL PLANS

MODEL	DGN	STATE PROJECT NO.	SHEET NO.	TOTAL SHEETS
GEN14	29533genplans	29533	39	46

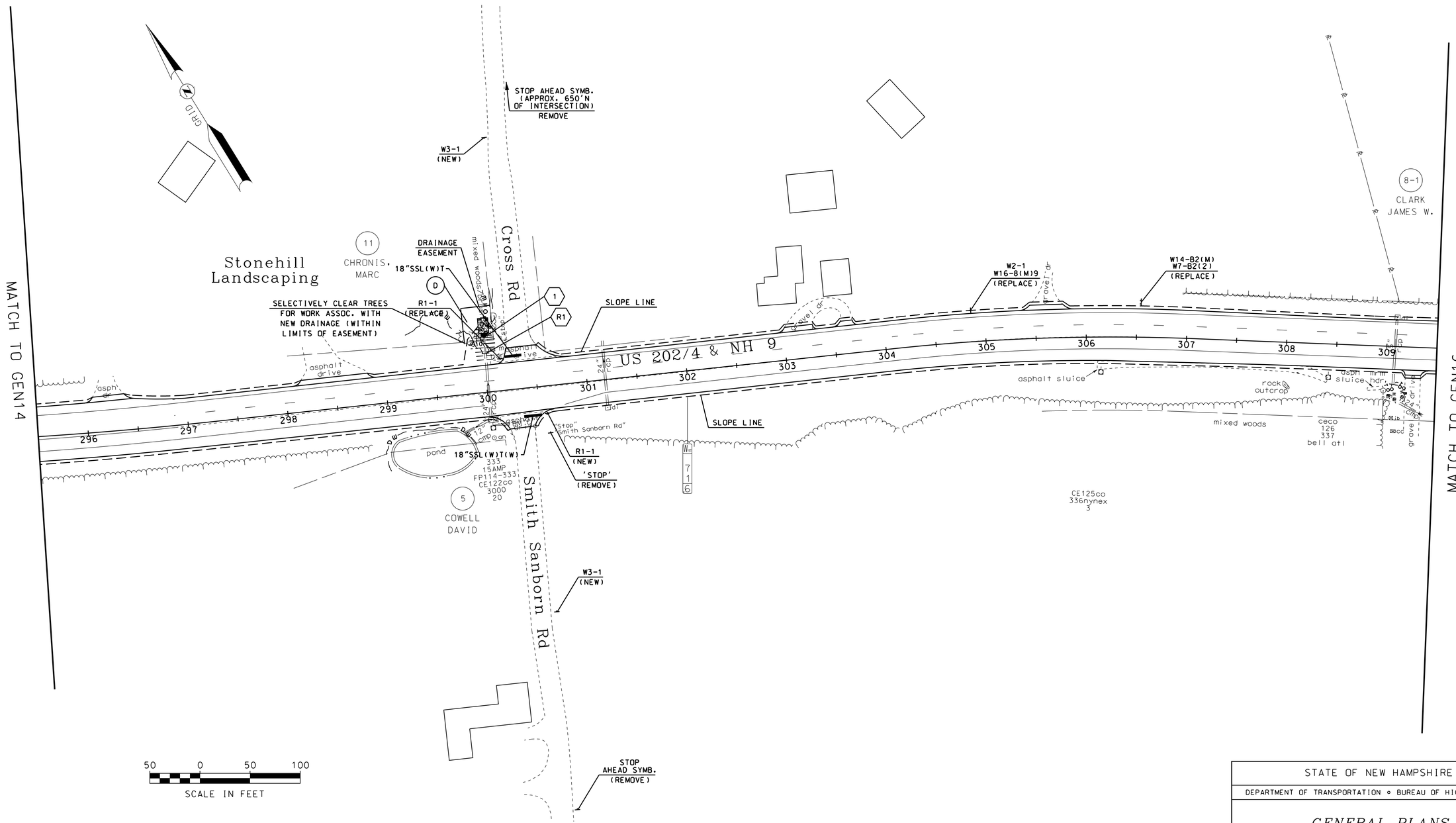

REVISIONS AFTER PROPOSAL

NUMBER	DATE	STATION	STATION	DESCRIPTION

SDR PROCESSED	SEL	DATE	10/16/15
NEW DESIGN	M. TUTTLE	DATE	10/2015
SHEET CHECKED	SLM	DATE	05/2016
AS BUILT DETAILS		DATE	

STATE OF NEW HAMPSHIRE

DEPARTMENT OF TRANSPORTATION ∘ BUREAU OF HIGHWAY DESIGN

GENERAL PLANS

MODEL	DGN	STATE PROJECT NO.	SHEET NO.	TOTAL SHEETS
GEN15	29533genplans	29533	40	46

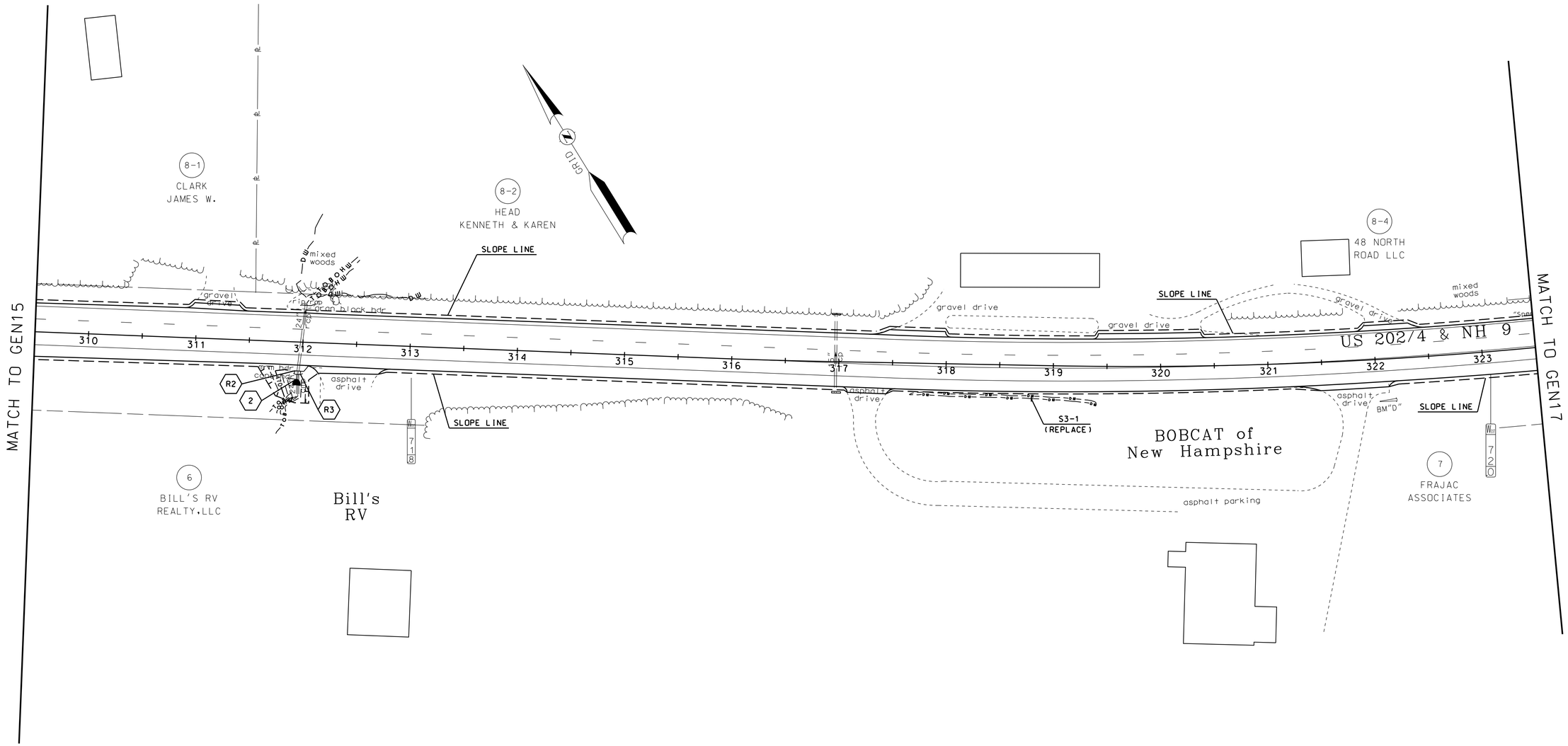

50 0 50 100

SCALE IN FEET

REVISIONS AFTER PROPOSAL			
NUMBER	DATE	STATION	STATION	DESCRIPTION

SDR PROCESSED	SEL	DATE 10/16/15
NEW DESIGN	M.TUTTLE	DATE 10/2015
SHEET CHECKED	SLM	DATE 05/2015
AS BUILT DETAILS		DATE

STATE OF NEW HAMPSHIRE

DEPARTMENT OF TRANSPORTATION ∘ BUREAU OF HIGHWAY DESIGN

GENERAL PLANS

MODEL	DGN	STATE PROJECT NO.	SHEET NO.	TOTAL SHEETS
GEN16	29533genplans	29533	41	46

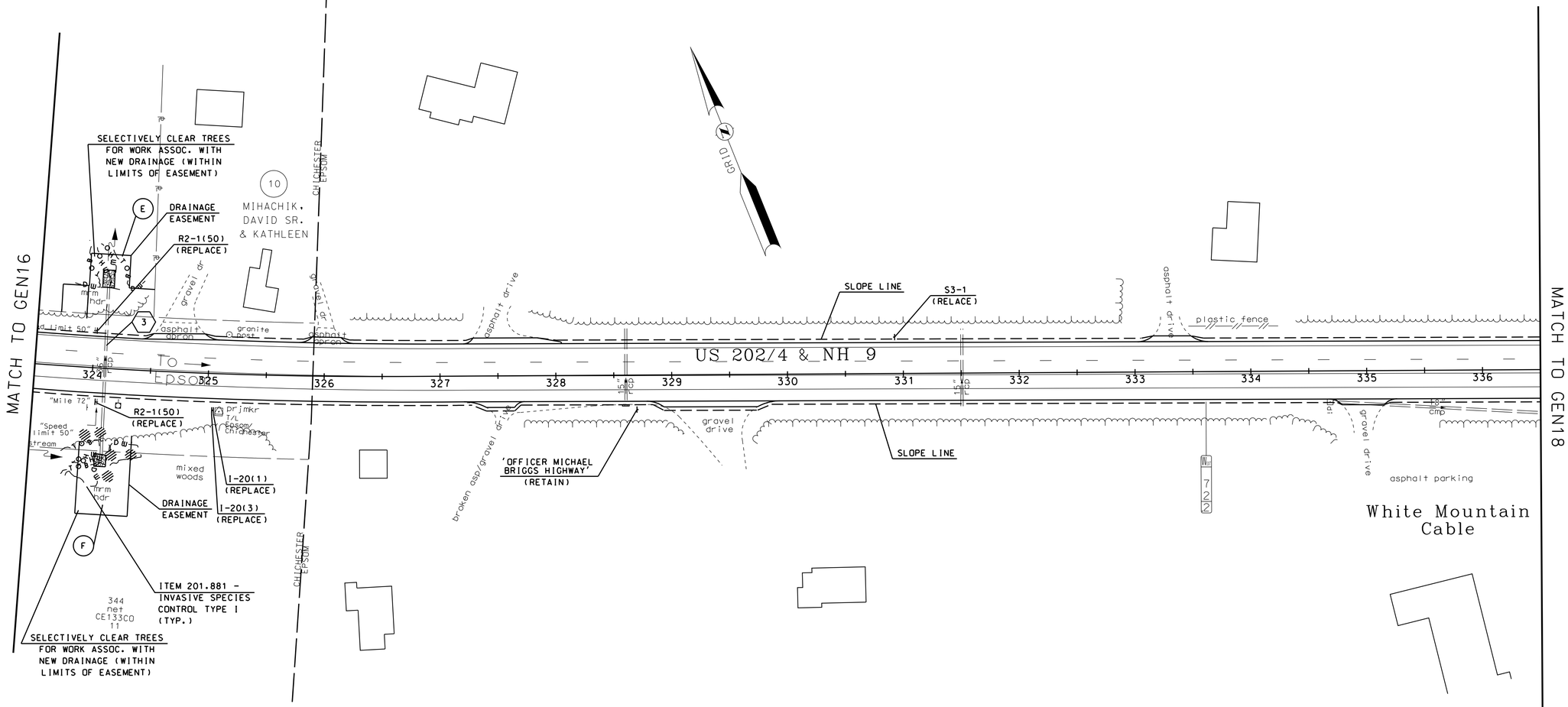

50 0 50 100

SCALE IN FEET

REVISIONS AFTER PROPOSAL			
NUMBER	DATE	STATION	DESCRIPTION

SDR PROCESSED	SEL	DATE	10/16/15
NEW DESIGN	M. TUTTLE	DATE	10/2015
SHEET CHECKED	SLM	DATE	05/2016

AS BUILT DETAILS DATE

STATE OF NEW HAMPSHIRE

DEPARTMENT OF TRANSPORTATION ∘ BUREAU OF HIGHWAY DESIGN

GENERAL PLANS

MODEL	DGN	STATE PROJECT NO.	SHEET NO.	TOTAL SHEETS
GEN17	29533genplans	29533	42	46

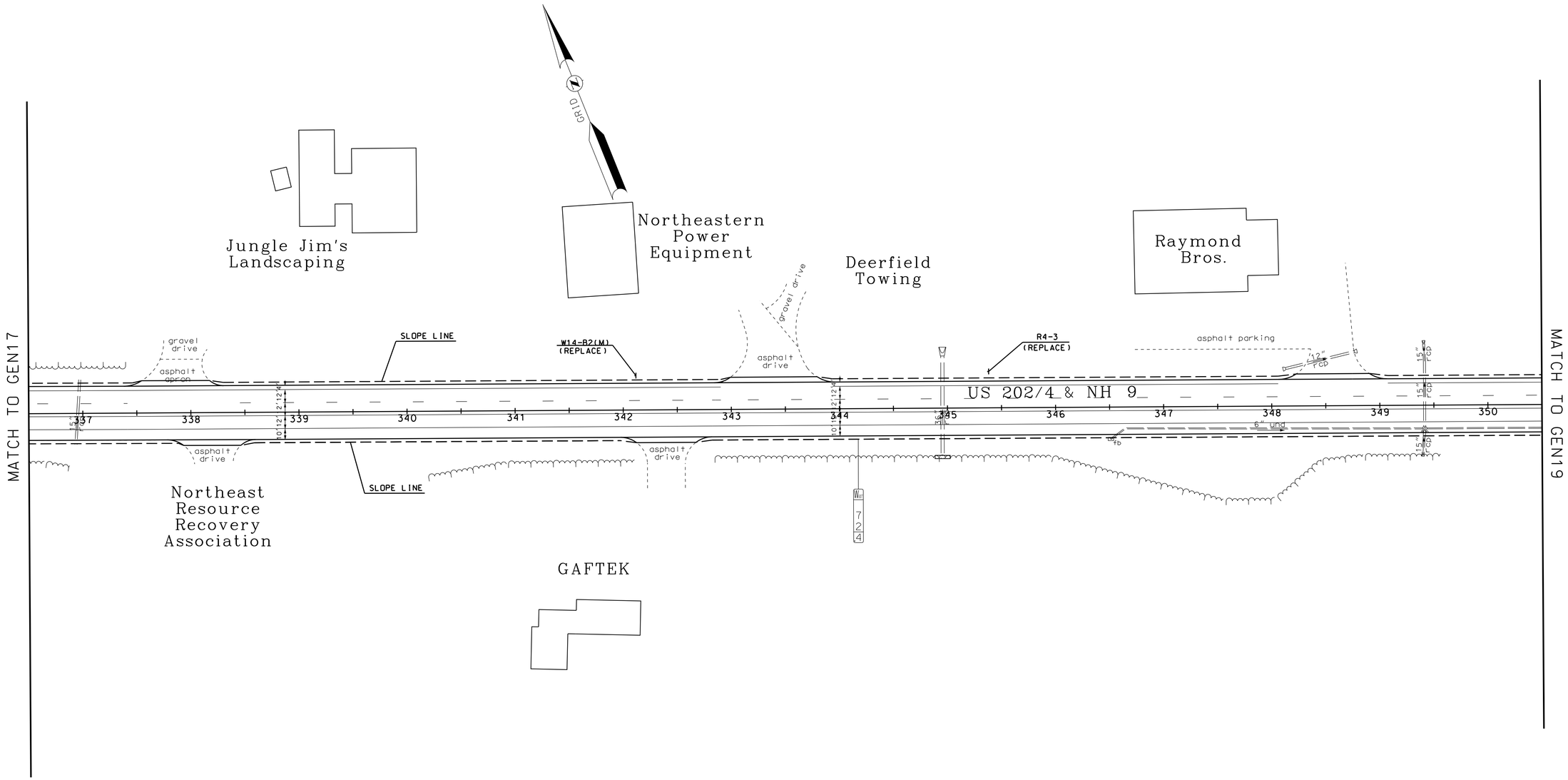

50 0 50 100
SCALE IN FEET

NUMBER	DATE	STATION	STATION	DESCRIPTION

REVISIONS AFTER PROPOSAL

SDR PROCESSED	SEL	DATE 10/16/15
NEW DESIGN	M. TUTTLE	DATE 10/2015
SHEET CHECKED	SLM	DATE 05/2016
AS BUILT DETAILS		DATE

STATE OF NEW HAMPSHIRE

DEPARTMENT OF TRANSPORTATION ∘ BUREAU OF HIGHWAY DESIGN

GENERAL PLANS

MODEL	DGN	STATE PROJECT NO.	SHEET NO.	TOTAL SHEETS
GEN18	29533genplans	29533	43	46

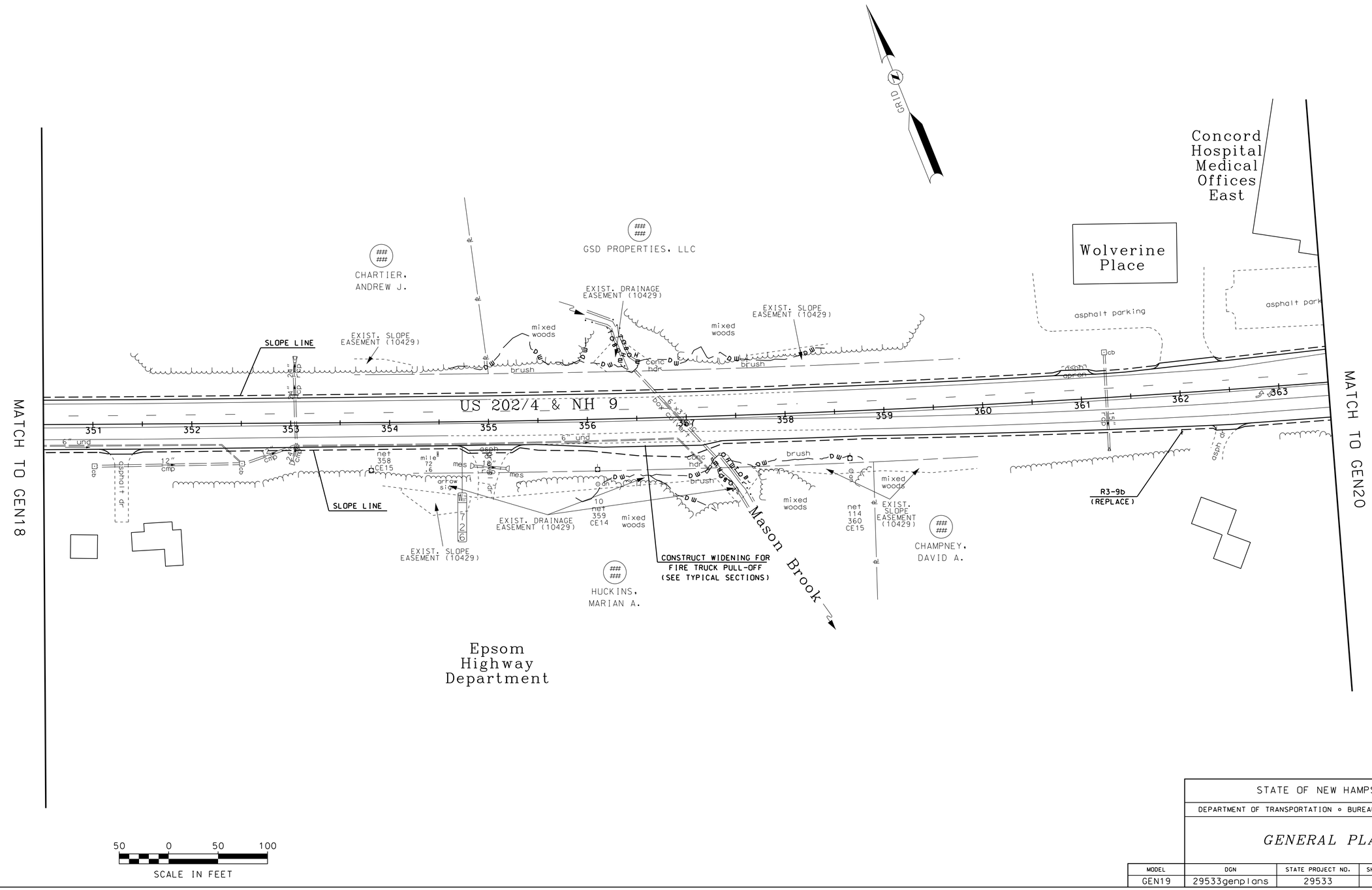

REVISIONS AFTER PROPOSAL

NUMBER	DATE	STATION	STATION	DESCRIPTION

SDR PROCESSED	SEL	DATE	10/16/15
NEW DESIGN	M.TUTTLE	DATE	10/2015
SHEET CHECKED	SLM	DATE	05/2016
AS BUILT DETAILS		DATE	

STATE OF NEW HAMPSHIRE

DEPARTMENT OF TRANSPORTATION ∘ BUREAU OF HIGHWAY DESIGN

GENERAL PLANS

MODEL	DGN	STATE PROJECT NO.	SHEET NO.	TOTAL SHEETS
GEN19	29533genplans	29533	44	46

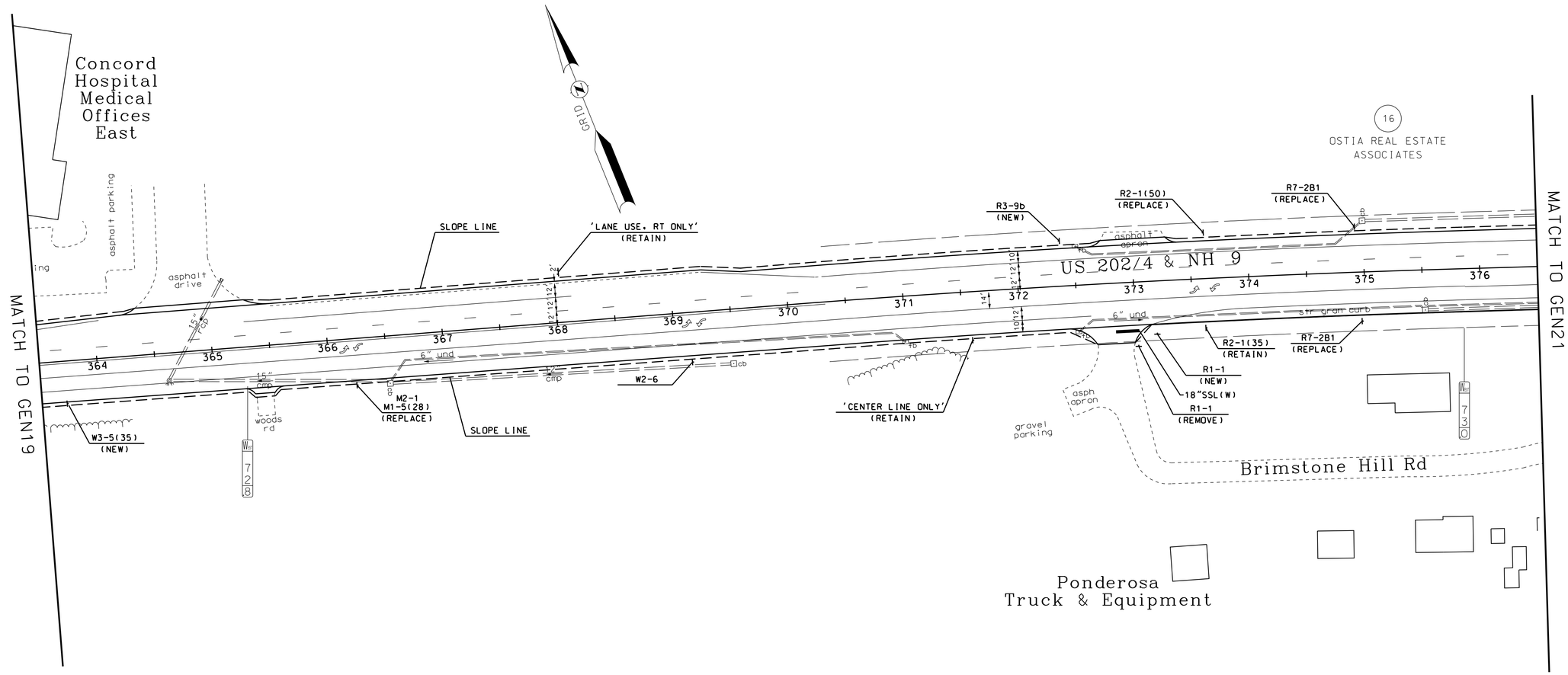

50 0 50 100
SCALE IN FEET

REVISIONS AFTER PROPOSAL			
NUMBER	DATE	STATION	STATION

DESCRIPTION

SDR PROCESSED	SEL	DATE 10/16/15
NEW DESIGN	M.TUTTLE	DATE 10/2015
SHEET CHECKED	SLM	DATE 05/2016
AS BUILT DETAILS		DATE

STATE OF NEW HAMPSHIRE

DEPARTMENT OF TRANSPORTATION ∘ BUREAU OF HIGHWAY DESIGN

GENERAL PLANS

MODEL	DGN	STATE PROJECT NO.	SHEET NO.	TOTAL SHEETS
GEN20	29533genplans	29533	45	46

END CONSTRUCTION
STA 384+90

END APPROACH
STA 386+40

MATCH TO GEN20

US 202/4 & NH 9

NH ROUTE 28

EPSOM TRAFFIC CIRCLE

GRID

22 WENDCO OF EPSOM, INC

22A CAFUA REALTY TRUST XLV, LLC

Wendy's

Circle Self Storage

Dunkin' Donuts

SAWYER AVE

Care Pharmacy

Epsom Professional Place

Steve's Insurance

Epsom Circle Market

Arista Professional Center

Subway

Mc Bride's

'WEST 4 202 9' (REMOVE)

M3-4 M1-4(4) (NEW)

M3-4 M1-4(202) (NEW)

M3-5(9) (NEW)

R7-2B1 (RELACE)

SLOPE LINE RETAIN

'PURPLE HEART TRAIL'

'SPONSOR A HIGHWAY EPSOM CHICHESTER LIONS CLUB' (RETAIN)

R7-2B1 (REPLACE)

R4-3 R7-2B1 (REPLACE)

18"SSL(W)T

R1-1 (REPLACE)

R3-9b R7-2B1 (REPLACE)

'YIELD AHEAD' (REMOVE)

'NO PARKING' (REMOVE)

W3-2 R7-2B1 (NEW)

R1-1 (REPLACE)

18"SSL(W)T

R7-2B1 (REPLACE)

R7-2B1 (REPLACE)

asphalt parking

asphalt drive

asph curb

str gran curb

pedestrian island

grass island

SCALE IN FEET

50 0 50 100

MODEL	DGN	STATE PROJECT NO.	SHEET NO.	TOTAL SHEETS
GEN21	29533genplans	29533	46	46

STATE OF NEW HAMPSHIRE

DEPARTMENT OF TRANSPORTATION ∘ BUREAU OF HIGHWAY DESIGN

GENERAL PLANS

REVISIONS AFTER PROPOSAL

STATION	STATION	NUMBER	DATE	DESCRIPTION

SDR PROCESSED SEL DATE 10/16/15

NEW DESIGN M. TUTTLE DATE 10/2015

SHEET CHECKED NAME3 DATE 05/2016

AS BUILT DETAILS DATE