STATE OF NEW HAMPSHIRE
DEPARTMENT OF TRANSPORTATION

CONSTRUCTION PLANS
FEDERAL AID PROJECT

X-A001(010)
N.H. PROJECT NO. 15882
N.H. ROUTE 25 & N.H. ROUTE 3A over BAKER RIVER

DESIGN DATA

AVERAGE DAILY TRAFFIC 20 12	12000
AVERAGE DAILY TRAFFIC 20 32	18000
PERCENT OF TRUCKS	6.8%
DESIGN SPEED	40 mph
LENGTH OF PROJECT	0.625 mi

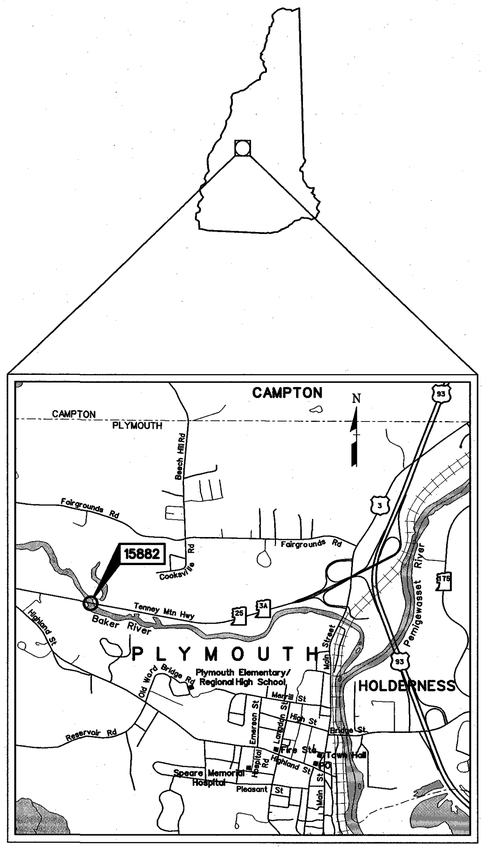

LOCATION MAP

0 1/2 1 mi.

GRAPHIC SCALE

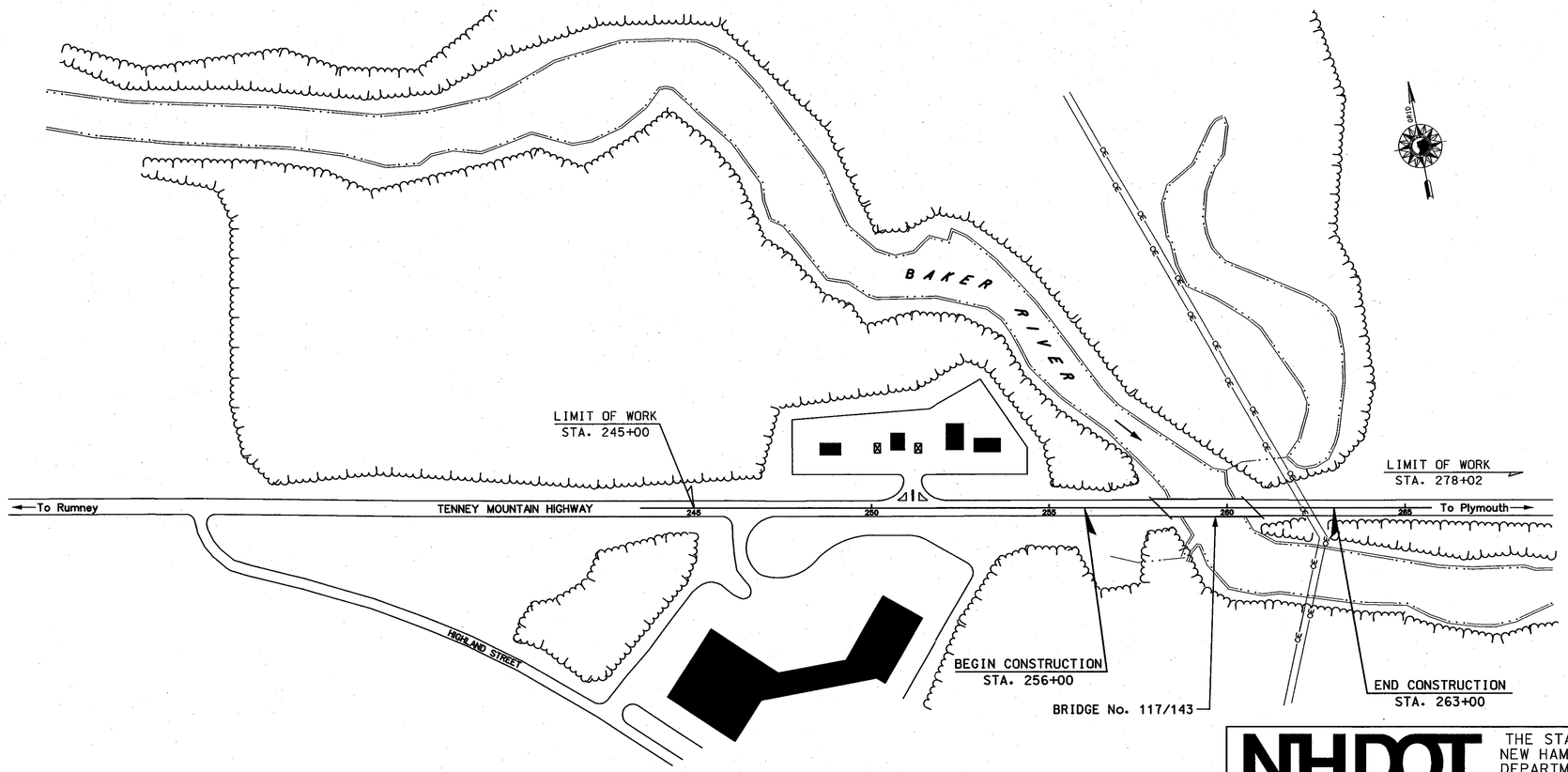

TOWN OF PLYMOUTH
COUNTY OF GRAFTON

SCALE: 1" = 200'

NHDOT THE STATE OF NEW HAMPSHIRE DEPARTMENT OF TRANSPORTATION

RECOMMENDED FOR APPROVAL:

William Cass — DIRECTOR OF PROJECT DEVELOPMENT — 9/15/10 DATE

APPROVED: — ASSISTANT COMMISSIONER AND CHIEF ENGINEER — 9/16/10 DATE

U. S. DEPARTMENT OF TRANSPORTATION
FEDERAL HIGHWAY ADMINISTRATION

APPROVED:

DIVISION ADMINISTRATOR — DATE

SUBDIRECTORY	.DGN LOCATOR	FEDERAL PROJECT NO.	STATE PROJECT NO.	SHEET NO.	TOTAL SHEETS
Prj/Frontsheets	15882FSC	X-A001(010)	15882	1	29

DRAWN BY	PJP	DATE 6/2010
CHECKED BY	DDT	DATE 6/2010

INDEX OF SHEETS

SHEET NO.	DESCRIPTION
1	TITLE SHEET
2	INDEX OF SHEETS & ROADWAY QUANTITIES
3-4	STANDARD SYMBOLS
	BRIDGE PLANS (BR. No. 117/143)
5-23	PLANS & DETAILS
	ROADWAY PLANS
24	GENERAL PLAN - NOTES & RECONSTRUCTION DETAILS
25	GENERAL PLAN - INVASIVE SPECIES SITES
26	TRAFFIC CONTROL & CONSTRUCTION SIGNING
27	PORTABLE CONCRETE BARRIER
28	BEAM GUARDRAIL STANDARD SECTION - STEEL POSTS
29	EAGRT ALTERNATIVE PLATFORM GRADING

GENERAL NOTES

1. FOR STANDARD PLANS, SEE "STANDARD PLANS FOR ROAD AND BRIDGE CONSTRUCTION" DATED 2010 (A BOUND BOOK).
2. HIGH TENSION OVERHEAD TRANSMISSION LINES ARE LOCATED THROUGHOUT THE PROJECT WITH CROSSINGS AT VARIOUS LOCATIONS AND RUNNING ALONG THE ROAD THROUGHOUT THE PROJECT EVEN ON REGULAR POLES. THE CONTRACTOR IS ADVISED THAT EXTREME CAUTION WILL BE REQUIRED IN THE OPERATION OF EQUIPMENT, ESPECIALLY CRANES AND PILE DRIVING EQUIPMENT.
3. REMOVE TOPSOIL FOR ITS TOTAL DEPTH WITHIN THE LIMITS OF THE SLOPE LINES. UNLESS OTHERWISE DIRECTED, STOCKPILE TOPSOIL AND USE IT ON THIS PROJECT AS NEEDED UNDER SECTION 641 - LOAM AND/OR SECTION 647 - HUMUS.
4. REMOVAL OF EXISTING CONCRETE PAVEMENT WILL BE PAID UNDER ITEM 203.2 - ROCK EXCAVATION. THE BITUMINOUS PAVEMENT ABOVE THE CONCRETE WILL NOT BE PAID UNDER ITEM 203.2.
5. MODIFY SUPERELEVATION ON EXISTING CURVES BY THE USE OF A LEVELING COURSE TO THE RATES INDICATED ON THE PLANS OR AS ORDERED.
6. EXISTING DELINEATORS AND WITNESS MARKERS THAT ARE REMOVED AND DETERMINED BY THE ENGINEER TO BE IN ACCEPTABLE CONDITION SHALL BE RESET (SUBSIDIARY). ADDITIONAL DELINEATORS AND WITNESS MARKERS ORDERED WILL BE PAID UNDER THE APPROPRIATE ITEMS OF THE CONTRACT.
7. NO EXISTING MONUMENTS, BOUNDS, OR BENCHMARKS SHALL BE DISTURBED WITHOUT FIRST MAKING PROVISIONS FOR RELOCATION.
8. PERFORM ALL WORK WITHIN THE EXISTING RIGHT-OF-WAY, UNLESS OTHERWISE SHOWN ON THE PLANS OR AS ORDERED BY THE ENGINEER.
9. REMOVE UNPROTECTED PROJECT MARKERS (SUBSIDIARY).
10. SURVEY DATA FOR THIS PROJECT WAS COLLECTED BY SDR AND THE FIELD NOTES CAN BE FOUND IN THE FIELD BOOK 13332. COORDINATES ARE NEW HAMPSHIRE STATE PLANE COORDINATES OF NAD83, 1986 ADJUSTMENT AND THE BEARINGS ARE GRID. ELEVATIONS ARE REFERENCED TO NGVD 1929.
11. QUANTITIES FOR EMBANKMENT AND EXCAVATION FOR SLOPE ROUNDINGS AS SHOWN ON THE TYPICALS HAVE NOT BEEN CALCULATED AND ARE NOT INCLUDED IN THE QUANTITY SUMMARIES, AND ARE CONSIDERED SUBSIDIARY TO THE APPROPRIATE 203 ITEMS.

THE FOLLOWING GENERAL NOTES WILL BE USED ON THIS PROJECT:

1	2				6	7	8		10		

REVISIONS AFTER PROPOSAL

NUMBER	DATE	STATION	STATION	DESCRIPTION

SDR PROCESSED SEL & SG DATE 6/08 & 5/09
NEW DESIGN PJP DATE 08/10
SHEET CHECKED DDT DATE 08/10
AS BUILT DETAILS DATE

FILE NO. 115-4-3

STATE OF NEW HAMPSHIRE
DEPARTMENT OF TRANSPORTATION • BUREAU OF HIGHWAY DESIGN

INDEX OF SHEETS AND GENERAL NOTES

SUBDIRECTORY	REVISION DATE	DGN	STATE PROJECT NO.	SHEET NO.	TOTAL SHEETS
Prj/CutSheet	3/4/09	15882_INDEX	15882	2	29

GENERAL

	PROPOSED ROADWAY	existing roadway	(pavement removed outside slope lines)
EDGE OF PAVEMENT			
TRAVELED WAY			

DRIVEWAYS — (label surface type)

BUILDINGS — (building to be removed) — (label house or type of building)

FOUNDATION — (label type)

LEACH FIELD — leach field

BRIDGE CROSSINGS — STREAM — OVERPASS

STEPS AND WALK — (label type)

INTERMITTENT WATER COURSE

SHORE LINE — river/stream — pond — (label name of water body)

POTENTIAL WET AREA SYMBOL

BRUSH OR WOODS LINE

TREES (PLANS) — (deciduous) (coniferous) (stump)

TREE OR STUMP (CROSS-SECTIONS) — (show station, circumference in feet & type)

HEDGE — (label type)

MONITORING WELL — mon W

WELL — W

FLAG POLE — fp

ORIGINAL GROUND (TYPICALS)

ROCK OUTCROP

ROCK LINE (TYPICALS & SECTIONS ONLY)

	existing	PROPOSED
GUARDRAIL (LABEL TYPE)	bgr, cgr	
JERSEY BARRIER		
CURB (LABEL TYPE)		
STONE WALL		
RETAINING WALL (LABEL TYPE)		(points toward retained ground)
FENCE (LABEL TYPE)		

SIGNS — (single post) — (double post)

GAS PUMP — gp

FUEL TANK (ABOVE GROUND) — ft (label size & type)

STORAGE TANK FILLER CAP — fc

SEPTIC TANK — S

GRAVE — gr

MAILBOX — mb

VENT PIPE — vp

SATELLITE DISH ANTENNA — da

PHONE — ph

GROUND LIGHT/LAMP POST — gl lp

BORING LOCATION — B

TEST PIT — TP

INTERSTATE NUMBERED HIGHWAY — 293

UNITED STATES NUMBERED HIGHWAY — 3

STATE NUMBERED HIGHWAY — 102

WETLANDS

WETLAND DESIGNATION AND TYPE — 2 PUB2E

DELINEATED WETLAND — DW

PRIME WETLAND — PWET

ORDINARY HIGH WATER — OHW

TOP OF BANK — TOB

TOP OF BANK & ORDINARY HIGH WATER — TOBOHW

MEAN HIGH TIDE — MHT

TIDAL BUFFER ZONE — TBZ

HIGHEST OBSERVABLE TIDAL LINE — HOTL

SPECIAL AQUATIC SITE — SAS

VERNAL POOL — VP

INVASIVE SPECIES LABEL — I.S. I — I.S. II

INVASIVE SPECIES — INV

WATER FRONT BUFFER — WB50

NATURAL WOODLAND BUFFER — NWB150

PROTECTED SHORE LAND — PS250

FLOODPLAIN / FLOODWAY

500 YEAR FLOODPLAIN BOUNDARY — FP500

100 YEAR FLOODPLAIN BOUNDARY — FP100

FLOODWAY — FW

ENGINEERING

CONSTRUCTION BASELINE — 30 31 32

PC, PT, POT (ON CONST BASELINE)

PI (IN CONSTRUCTION BASELINES)

INTERSECTION OR EQUATION OF TWO LINES

ORIGINAL GROUND LINE (PROFILES AND CROSS-SECTIONS)

PROFILE GRADE LINE (PROFILES AND CROSS-SECTIONS)

CLEARING LINE — SLOPE LINE

SLOPE LINE

SLOPE LINE (FILL)

SLOPE LINE (CUT)

PROFILES AND CROSS SECTIONS:

ORIGINAL GROUND ELEVATION (LEFT) — 72.5

FINISHED GRADE ELEVATION (RIGHT) — 79.14

SHEET 1 OF 2

STATE OF NEW HAMPSHIRE

DEPARTMENT OF TRANSPORTATION • BUREAU OF HIGHWAY DESIGN

STANDARD SYMBOLS

SUBDIRECTORY	REVISION DATE	DGN	STATE PROJECT NO.	SHEET NO.	TOTAL SHEETS
Prj/Cutsheet	3/9/09	15882SYMBOLS	15882	3	29

DRAINAGE

MANHOLE — mh (existing) — (PROPOSED)

CATCH BASIN — cb (existing) — (PROPOSED)

DROP INLET — di (existing) — (PROPOSED)

DRAINAGE PIPE (existing) — (label size & type)

DRAINAGE PIPE (PROPOSED)

UNDERDRAIN (existing) W/ FLUSHING BASIN — fb — (label size & type)

UNDERDRAIN (PROPOSED) W/ FLUSHING BASIN

show direction of flow

HEADER (existing & PROPOSED) — (with stone outlet protection)

END SECTION (existing & PROPOSED) — METAL or PLASTIC — RCP

OPEN DITCH (PROPOSED)

EROSION CONTROL/ STONE SLOPE PROTECTION

BOUNDARIES / RIGHT-OF-WAY

RIGHT-OF-WAY LINE — (label type)

RR RIGHT-OF-WAY LINE

PROPERTY LINE — PL

PROPERTY LINE (COMMON OWNER) — Z

TOWN LINE — BOW / CONCORD

COUNTY LINE — COOS / GRAFTON

STATE LINE — MAINE / NEW HAMPSHIRE

NATIONAL FOREST

LCHIP CONSERVATION EASEMENT

BENCH MARK / SURVEY DISK

BOUND — bnd — (PROPOSED)

STATE LINE/ TOWN LINE MONUMENT — S/L — T/L

NHDOT PROJECT MARKER

IRON PIPE OR PIN — ip

DRILL HOLE IN ROCK — dh

TAX MAP AND LOT NUMBER — 156 / 14 — 1642/341 — 6.80 Ac.±

PROPERTY PARCEL NUMBER — 12

HISTORIC PROPERTY — H

UTILITIES

existing — PROPOSED

TELEPHONE POLE

POWER POLE

JOINT OCCUPANCY

MISCELLANEOUS/UNKNOWN POLE

GUY POLE OR PUSH BRACE

(plot point at face not center of symbol)

LIGHT POLE

LIGHT ON POWER POLE

LIGHT ON JOINT POLE

POLE STATUS: REMOVE, LEAVE, PROPOSED, OR TEMPORARY AS APPLICABLE e.g.: R L — P+04 25.0' — T+04 25.0'

RAILROAD — (label ownership)

RAILROAD SIGN

RAILROAD SIGNAL

UTILITY JUNCTION BOX — jb — JB

OVERHEAD ELECTRIC — OE

UNDERGROUND UTILITIES

WATER (on existing lines label size, type and note if abandoned) — W — PW

SEWER — S — PS

TELEPHONE — T — PT

ELECTRIC — E — PE

GAS — G — PG

LIGHTING — L — PL

INTELLIGENT TRANSPORTATION SYSTEM — ITS — PITS

FIBER OPTIC — FO — PFO

WATER GATE

WATER SHUT OFF

GAS SHUT OFF

HYDRANT

MANHOLES

SEWER — MHS

TELEPHONE — MHT

ELECTRICAL — MHE

GAS — MHG

TRAFFIC SIGNALS

existing — PROPOSED

MAST ARM (existing) — 30' MA (NOTE ANGLE FROM ℄)

OPTICOM RECEIVER

OPTICOM STROBE

TRAFFIC SIGNAL

PEDESTAL WITH PEDESTRIAN SIGNAL HEADS AND PUSH BUTTON UNIT

SIGNAL CONDUIT — C — PC

CONTROLLER CABINET — cc — CC

METER PEDESTAL — mp — MP

PULL BOX — pb — PB

LOOP DETECTOR (QUADRUPOLE) — (label size)

LOOP DETECTOR (RECTANGULAR) — (label size)

CONSTRUCTION NOTES

CURB MARK NUMBER - BITUMINOUS — B-1

CURB MARK NUMBER - GRANITE — G-1

CLEARING AND GRUBBING AREA — A

DRAINAGE NOTE — 1

EROSION CONTROL NOTE — A

FENCING NOTE — A

GUARDRAIL NOTE — 1

LIGHTING NOTE — A

TRAFFIC SIGNAL NOTE — 1

SHEET 2 OF 2

STATE OF NEW HAMPSHIRE

DEPARTMENT OF TRANSPORTATION ∘ BUREAU OF HIGHWAY DESIGN

STANDARD SYMBOLS

SUBDIRECTORY	REVISION DATE	DGN	STATE PROJECT NO.	SHEET NO.	TOTAL SHEETS
Prj/Cutsheet	3/9/09	15882SYMBOLS	15882	4	29

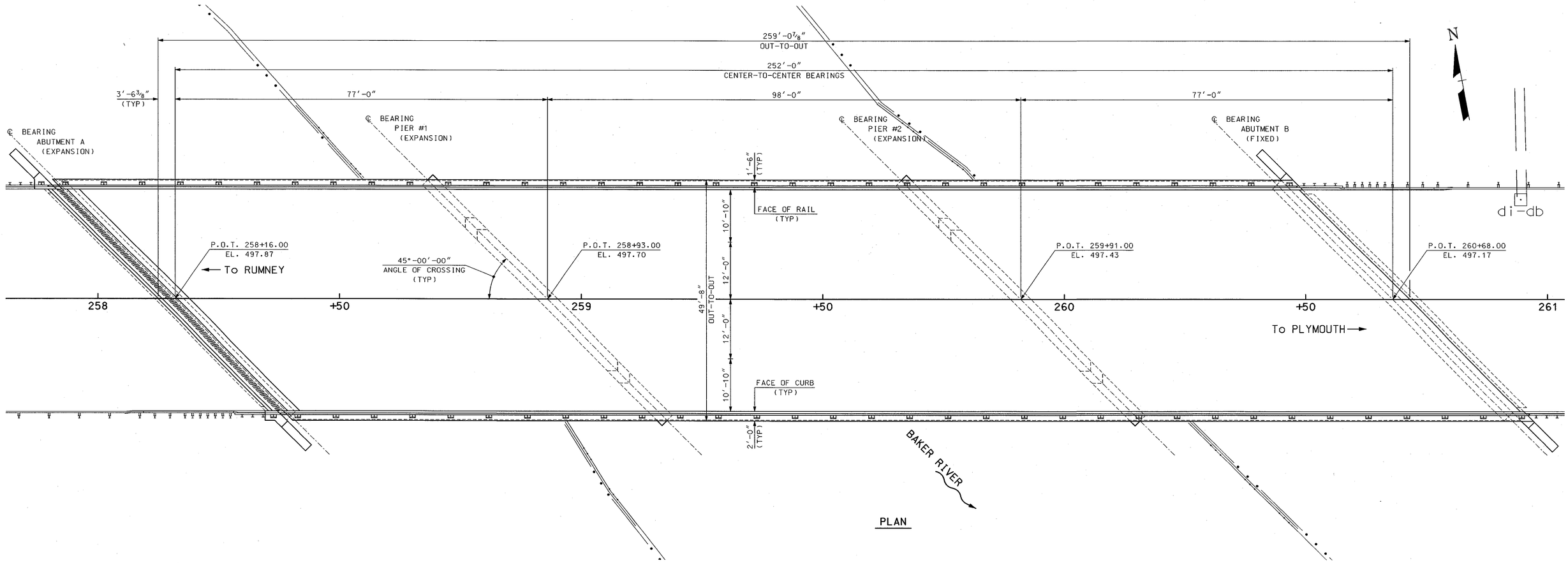

PLAN

V.C. = 2200'
K = 1444
P.V.I. EL. = 502.30
P.V.I. STA. = 256+00

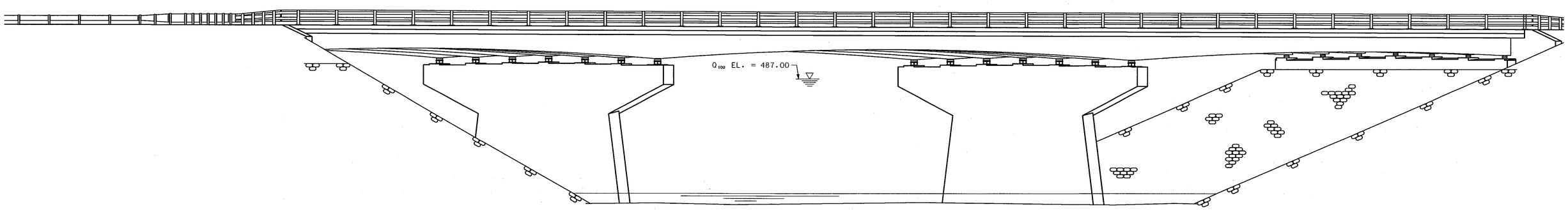

ELEVATION

SUBDIRECTORY	.DGN LOCATOR	SHEET SCALE
BRC/BrSite	15882GENPLAN	1" = 10'

STATE OF NEW HAMPSHIRE

DEPARTMENT OF TRANSPORTATION * BUREAU OF BRIDGE DESIGN

TOWN PLYMOUTH BRIDGE NO. 117\143 STATE PROJECT 15882

LOCATION N.H. ROUTE 25 & N.H. ROUTE 3A over BAKER RIVER

GENERAL PLAN & ELEVATION

BRIDGE SHEET 1 OF 19

REVISIONS AFTER PROPOSAL		BY	DATE		BY	DATE
	DESIGNED	DDT	4/10	CHECKED	MGL	08/10
	DRAWN	DDT/PJP	6/10	CHECKED	MGL	08/10
	QUANTITIES	DDT	4/10	CHECKED	MGL	08/10

ISSUE DATE		FEDERAL PROJECT NO.	SHEET NO.	TOTAL SHEETS
REV. DATE		----------	5	29

FILE NUMBER 115-4-3

DESIGN LOADS, MATERIALS, AND SPECIFICATIONS

(1) DESIGN LOADING: HL-93

(2) DESIGN METHOD: LOAD AND RESISTANCE FACTOR (LRFD)

(3) SPECIFICATIONS:
- AASHTO LRFD BRIDGE DESIGN SPECIFICATIONS, 5TH EDITION, 2010
- AASHTO BRIDGE CONSTRUCTION SPECIFICATIONS, WITH INTERIM REVISIONS
- NHDOT 2010 STANDARD SPECIFICATIONS, AS AMENDED
- WELDING PER AASHTO/AWS D1.5-08 (INCLUDING ALL REVISIONS PUBLISHED BY AASHTO AS OF THE BID OPENING DATE) & NHDOT STANDARD SPECIFICATIONS FOR ROAD & BRIDGE CONSTRUCTION

(4) REINFORCING STEEL: AASHTO M 31 (ASTM A 615), GRADE 60

(5) CONCRETE:
- DECK SLAB & BRUSH CURB: CONCRETE BRIDGE DECK (QC/QA) (F), ITEM 520.7002 (4 KSI)
- STUBWALL & BACKWALL: CONCRETE CLASS AA, ITEM 520.01 (4 KSI)

GENERAL NOTES

(1) EXISTING PLANS (FILE NO. 3-11-2-3) MAY BE VIEWED AT THE NHDOT, BUREAU OF BRIDGE DESIGN OFFICE DURING THE BIDDING PERIOD. AFTER THE CONTRACT HAS BEEN AWARDED, A COMPLETE SET OF EXISTING PLANS WILL BE FORWARDED TO THE CONTRACTOR UPON REQUEST.

(2) THE CONTRACTOR SHOULD BE AWARE THAT EXISTING STRUCTURE DIMENSIONS AND ELEVATIONS SHOWN IN THESE PLANS WERE TAKEN FROM ORIGINAL BRIDGE PLANS AND DO NOT NECESSARILY REPRESENT "AS BUILT" DIMENSIONS AND ELEVATIONS. THE CONTRACTOR SHALL FIELD VERIFY ALL DIMENSIONS AND ELEVATIONS OF THE EXISTING STRUCTURES AND BE PREPARED TO MAKE ADJUSTMENTS REQUIRED TO PROPERLY COMPLETE THE PROPOSED RECONSTRUCTION. ANY DISCREPANCIES IN DIMENSIONS, CHARACTER, OR EXTENT OF EXISTING FEATURES, SHALL BE BROUGHT TO THE ATTENTION OF THE ENGINEER PRIOR TO ADVANCING THE WORK.

(4) THE CONTRACTOR SHALL TAKE ALL NECESSARY MEASURES TO INSURE THAT DEBRIS, INCLUDING SLURRY FROM SAWCUTTING, DOES NOT FALL INTO THE WATERWAY BELOW THE STRUCTURE. ALL COSTS SHALL BE PAID UNDER ITEM 502. AND SHALL INCLUDE ERECTION, MAINTENANCE AND REMOVAL OF TEMPORARY STRUCTURES OR OTHER SUCH METHODS AS APPROVED.

(5) THE WELDING OF ATTACHMENTS TO GIRDERS FOR CONSTRUCITON PURPOSES SHALL NOT BE PERMITTED UNLESS APPROVED BY NHDOT, BUREAU OF BRIDGE DESIGN.

(6) NO SCAFFOLDS SHALL BE ERECTED OR OPERATIONS CONDUCTED IN THE WATERWAY, UNLESS APPROVED BY THE CONTRACT ADMINISTRATOR.

(7) ALL EXPOSED EDGES OF PROPOSED CONCRETE SURFACES SHALL BE CHAMFERED $^3/_4$", UNLESS OTHERWISE NOTED.

(8) SEAL JOINTS BETWEEN DECK AND BACKWALL WITH ITEM 562.1, SILICONE JOINT SEALANT (F).

(9) FOR SALVAGE OF MATERIALS, SEE PROSECUTION OF WORK.

(10) ITEM 534.3, WATER REPELLENT (SILANE-SILOXANE), SHALL BE APPLIED TO ALL NEW EXPOSED CONCRETE SURFACES AS SHOWN IN THE PLANS OR AS DIRECTED BY THE CONTRACT ADMINISTRATOR.

(11) EXISTING CONCRETE SURFACES OF WINGS, BACKWALLS, AND BRIDGE SEATS SHALL BE WASHED, SUBSIDIARY TO ITEM 534.3, AND COATED WITH ITEM 534.3, WATER REPELLENT (SILANE-SILOXANE). APPLICATION RATE OF 150 SF/GAL.

BRIDGE REMOVAL NOTES

(1) PORTABLE CONCRETE BARRIER SHALL BE IN PLACE BEFORE REMOVAL OPERATIONS BEGIN FOR EACH CONSTRUCTION PHASE. SEE BRIDGE SHEET 3 FOR DECK CONSTRUCTION SEQUENCE AND BARRIER NOTES AND SHEET 26 FOR TRAFFIC CONTROL PLANS.

(2) THE CONTRACTOR SHALL SUBMIT, FOR DOCUMENTATION IN ACCORDANCE WITH SECTION 105.02, A DETAILED OUTLINE OR PLAN OF THE PROPOSED METHOD FOR REMOVAL OF THE EXISTING BRIDGE COMPONENTS PRIOR TO COMMENCEMENT OF ANY REMOVAL WORK.

(3) REMOVAL OF EXISTING BRIDGE STRUCTURE, ITEM 502., UNLESS OTHERWISE SHOWN ON THE PLANS SHALL INCLUDE:
- COMPLETE REMOVAL OF THE EXISTING BRIDGE DECK INCLUDING ALL SCUPPERS, EXPANSION JOINT STEEL, BRIDGE RAIL, GRANITE CURB, AND STEEL END POSTS.
- ABUTMENT A BACKWALL TO LIMITS SHOWN IN THE PLANS.
- REMOVAL OF ALL BRIDGE SHOES.

(4) ASBESTOS BETWEEN THE TOP OF BACKWALL AND BOTTOM OF DECK OVER BACKWALL AT ABUTMENT B SHALL BE REMOVED AND DISPOSED OF UNDER ITEM 502.1012. ALL WORK SHALL BE PERFORMED BY QUALIFIED PERSONNEL IN ACCORDANCE WITH THE SPECIAL PROVISION.

(5) DURING ALL REMOVAL AND REPAIR OPERATIONS, EXTREME CARE SHALL BE TAKEN NOT TO DAMAGE THE TOP FLANGE OF EXISTING GIRDERS, SHEAR CONNECTORS AND REINFORCEMENT TO REMAIN IN PLACE. ANY DAMAGE SHALL BE IMMEDIATELY REPORTED TO THE CONTRACT ADMINISTRATOR AND REPAIRED AS DIRECTED, AT THE CONTRACTOR'S EXPENSE.

SUPERSTRUCTURE NOTES

(1) NO STRUCTURAL REPAIRS ARE ANTICIPATED. STRUCTURAL STEEL SHALL BE INSPECTED FOR STRUCTURAL DEFICIENCIES (e.g. SIGNIFICANT STEEL LOSS, CRACKS, MISSING BOLTS, ETC.) JOINTLY BY THE CONTRACT ADMINISTRATOR AND CONTRACTOR. ANY REPAIRS REQUIRED BY THE DEPARTMENT SHALL BE PERFORMED BY THE CONTRACTOR AND PAID UNDER ITEM 1002.1, REPAIRS OR REPLACEMENTS AS NEEDED - BRIDGE STRUCTURES.

(2) THE CONTRACTOR SHALL INSTALL TEMPORARY BRACING, SHORING OR SUPPORTS AS NECESSARY TO MAINTAIN THE STRUCTURAL INTEGRITY DURING CONSTRUCTION. ALL COSTS INCLUDED IN ITEM 550.191 (SEE SPECIAL PROVISION).

(3) JACKING SHALL BE REQUIRED TO REMOVE AND REPLACE BRIDGE SHOES AS OUTLINED IN THE PLANS AND SPECIAL PROVISIONS. THE PROPOSED JACKING METHOD SHALL BE SUBMITTED TO THE ENGINEER FOR APPROVAL. THE MAXIMUM ALLOWABLE DIFFERENCE BETWEEN ADJACENT JACKING POINTS SHALL BE $^1/_4$". TEMPORARY SHIMS OR BLOCKS SHALL BE PLACED BENEATH GIRDER FLANGES DURING THE TIME THAT JACKS ARE SUPPORTING THE LOADS. ALL COSTS SHALL BE INCLUDED IN ITEM 550.191, TEMPORARY GIRDER SUPPORT SYSTEM.

SUPERSTRUCTURE NOTES (CONTINUED)

(4) NEW SHEAR CONNECTORS SHALL BE INSTALLED AS OUTLINED IN THE PLANS AND SHALL BE FIELD WELDED TO THE TOP FLANGE OF GIRDERS WITH AUTOMATICALLY TIMED STUD WELDING EQUIPMENT. ALL COSTS FOR MATERIALS AND INSTALLATION SHALL BE PAID UNDER ITEM 547, SHEAR CONNECTORS (F).

(5) SCREED RAIL SUPPORTS REQUIRED FOR THE PLACEMENT OF DECK SLAB CONCRETE SHALL BE LOCATED AT THE CENTERLINE OF GIRDERS OR SUPPORTED ON OVERHANG BRACKETS. IF SCREED RAILS ARE SUPPORTED ON OVERHANG BRACKETS, DRAWINGS AND CALCULATIONS SHALL BE SUBMITTED FOR DOCUMENTATION IN ACCORDANCE WITH 105.02. A CONCRETE DENSITY OF 150 pcf AND A LIVE LOAD OF 50 psf SHALL BE APPLIED IN THE CALCULATIONS. ADEQUATE PROVISIONS SHALL BE MADE FOR SCREED MACHINE LOADS AND CALCULATIONS SHALL INDICATE THE STRUCTURAL INTEGRITY OF OVERHANG BRACKETS AND PROVIDE THAT CONCRETE COVER IN THE DECK WILL BE MAINTAINED.

(6) ITEM 538.6, BARRIER MEMBRANE, HEAT WELDED - MACHINE METHOD (F), SHALL BE LAPPED PER MANUFACTURER'S REQUIREMENTS AT PHASED CONSTRUCTION JOINTS. AT DECK ENDS, WHERE THE MEMBRANE WILL NOT LAP, A SEALANT/REPAIR MASTIC COMPATIBLE WITH ITEM 538.6 SHALL BRIDGE ANY GAP BETWEEN DECK MEMBRANE AND NEW VERTICAL MEMBRANE AT END OF DECK. ALL COSTS SHALL BE SUBSIDIARY TO ITEM 538.6.

(7) EXISTING STRUCTURAL STEEL SHALL BE CLEANED AND PAINTED AFTER COMPLETION OF ALL OTHER SUPERSTRUCTURE WORK AS OUTLINED IN THE SPECIAL PROVISION FOR 556.

(8) EXISTING BEARINGS SHALL BE REPLACED WITH ELASTOMERIC BEARING ASSEMBLIES AT BOTH PIERS AND ABUTMENT A, AND FIXED SHOE ASSEMBLIES AT ABUTMENT B, AS SHOWN IN THE PLANS.

SUBSTRUCTURE NOTES

(1) EXISTING ABUTMENTS, WINGWALLS, AND PIERS SHALL BE INSPECTED FOR DETERIORATED CONCRETE JOINTLY BY THE CONTRACT ADMINISTRATOR AND CONTRACTOR. ALL DETERIORATED CONCRETE SHALL BE REMOVED TO LIMITS DESIGNATED FROM INSPECTION AS SPECIFIED IN SECTION 512. PATCH CONCRETE SHALL BE CLASS AA, AS SPECIFIED IN SECTION 520. ALL COSTS WILL BE PAID UNDER ITEM 1002.1, REPAIRS AND REPLACEMENTS AS NEEDED - BRIDGE STRUCTURES.

(2) REMOVE ANY EXISTING LOOSE OR FLAKING EPOXY COATING FROM BACKWALLS AND SEATS AS DIRECTED. ALL COSTS PAID UNDER ITEM 502.

(3) ITEM 538.2, BARRIER MEMBRANE, PEEL AND STICK - VERTICAL SURFACES (F), SHALL EXTEND DOWN THE BACKWALL (ABUT A) OR STUBWALL (ABUT B) AND ACROSS APPROACH SLABS 1'-0" AS OUTLINED IN THE PLANS. OUTSIDE OF THE LIMITS OF THE APPROACH SLAB, THE MEMBRANE SHALL EXTEND 1'-0" MINIMUM BELOW THE BACKWALL CONSTRUCTION JOINT (ABUT A) OR THE DECK-OVER-BACKWALL INTERFACE (ABUT B).

REINFORCEMENT NOTES

(1) ANY EPOXY COATED REBARS CUT TO FIT SHALL BE TOUCHED UP WITH AN APPROVED EPOXY COATING MATERIAL. ALL COSTS SHALL BE INCLUDED IN ITEM 544.2 OR 544.21.

(2) ALL REINFORCEMENT SHALL HAVE $2^1/_2$" MINIMUM CLEAR COVER, UNLESS OTHERWISE NOTED.

(3) HOLES DRILLED IN EXISTING CONCRETE SHALL BE DRILLED $^1/_2$" DIAMETER LARGER THAN THE BAR DIAMETER AND GROUTED WITH HIGH STRENGTH, NON-SHRINK CEMENTITIOUS GROUT. ALL COSTS FOR DRILLING AND GROUTING SHALL BE SUBSIDIARY TO ITEM 544.

(4) PLACE REINFORCING STEEL TO AVOID RAIL POST ANCHOR ASSEMBLIES AND EXPANSION JOINT STEEL.

(5) REINFORCING LEGEND:

ALT	= ALTERNATE	BOT	= BOTTOM	BRG	= BEARING
CL	= CLEAR	DOW	= DOWEL	EQ	= EQUAL
FS	= FAR SIDE	MAX	= MAXIMUM	MC	= MECHANICAL CONNECTOR
MID	= MIDDLE	MIN	= MINIMUM	NS	= NEAR SIDE
SECT	= SECTION	SP	= SPACE	SPL	= SPLICE
SYM	= SYMMERTICAL	TYP	= TYPICAL		

(6) ALL NEW REINFORCEMENT BARS SHALL BE EPOXY COATED.

(7) EXISTING REINFORCING STEEL THAT IS TO REMAIN IN PLACE WITHIN THE REMOVAL AREAS SHALL BE CUT AS REQUIRED TO PROVIDE $2^1/_2$" MINIMUM CLEAR COVER FROM THE PROPOSED CONCRETE SURFACES, UNLESS OTHERWISE NOTED. ALL COSTS INCLUDED IN ITEM 502.

END DIAPHRAGM NOTES

(1) END DIAPHRAGMS SHALL BE INSTALLED AT ABUTMENT A, AS SHOWN ON SHEET 10, PRIOR TO THE PLACEMENT OF THE DECK CONCRETE. ALL STRUCTURAL STEEL SHALL CONFORM TO AASHTO M270, GRADE 50 (ASTM A709, GRADE 50), PAINTED, AND SHALL BE PAID UNDER ITEM 550.1, STRUCTURAL STEEL (F).

(2) ALL WELDING AND FABRICATION SHALL BE PERFORMED IN CONFORMANCE WITH AASHTO/AWS D1.5 BRIDGE WELDING CODE (INCLUDING ALL REVISIONS BY AASHTO AS OF THE BID OPENING DATE) AND THE MOST RECENT NHDOT SPECIFICATIONS FOR ROAD AND BRIDGE CONSTRUCTION.

(3) THE NHDOT WILL INSPECT THE SHOP FABRICATION OF THE STRUCTURAL STEEL.

(4) DIAPHRAGMS SHALL BE SHOP WELDED WITH $^1/_4$" FILLET WELDS, UNLESS OTHERWISE NOTED.

(5) ALL BOLTED FIELD CONNECTIONS SHALL BE MADE WITH $^7/_8$" DIAMETER HIGH STRENGTH BOLTS AASHTO M164 (ASTM A325) TYPE 1 GALVANIZED PLACED IN $^{15}/_{16}$" DIAMETER HOLES, UNLESS OTHERWISE NOTED.

(6) DIRECT-TENSION-INDICATORS SHALL BE INSTALLED WITH HIGH STRENGTH BOLTS.

BEARING ASSEMBLY NOTES

(1) SEE BRIDGE SHEET 7.

FIXED BRIDGE SHOE NOTES

(1) SEE BRIDGE SHEET 9.

EXPANSION JOINT NOTES

(1) SEE BRIDGE SHEET 14.

ROADWAY CONSTRUCTION NOTES

(1) FOR ROADWAY CONSTRUCTION NOTES, SEE SHEET 24.

SUMMARY OF BRIDGE QUANTITIES

ITEM NO.	ITEM DESCRIPTION	QUANTITY	UNIT
304.301	CRUSHED GRAVEL	33	CY
403.911	HOT BITUMINOUS BRIDGE PAVEMENT, 1" BASE COURSE (F)	74	TON
502.	REMOVAL OF EXISTING BRIDGE STRUCTURE	1	U
502.1012	REMOVAL OF EXISTING BRIDGE STRUCTURE (ASBESTOS)	1	U
504.1	COMMON BRIDGE EXCAVATION (F)	48	CY
520.01	CONCRETE CLASS AA	13	CY
520.7002	CONCRETE BRIDGE DECK (QC/QA) (F)	376	CY
534.3	WATER REPELLENT (SILANE-SILOXANE)	34	GAL
538.2	BARRIER MEMBRANE, PEEL AND STICK - VERTICAL SURFACES (F)	48	SY
538.6	BARRIER MEMBRANE, HEAT WELDED - MACHINE METHOD (F)	1293	SY
541.1	PVC WATERSTOPS, NH TYPE 1 (F)	62	LF
544.2	REINFORCING STEEL, EPOXY COATED (F)	93870	LB
544.21	REINFORCING STEEL, EPOXY COATED, MECHANICAL CONNECTORS (F)	11990	LB
547.	SHEAR CONNECTORS (F)	1792	EA
548.21	ELASTOMERIC BEARING ASSEMBLIES (F)	7	EA
548.22	ELASTOMERIC BEARING ASSEMBLIES (F)	14	EA
550.1	STRUCTURAL STEEL (F)	2185	LB
550.2	BRIDGE SHOES (F)	7	EA
550.191	TEMPORARY GIRDER SUPPORT SYSTEM	1	U
556.101	PAINTING EXISTING STRUCTURAL STEEL	1	U
556.201	CONTAINMENT AND ENVIRONMENTAL PROTECTION	1	U
556.301	WORKER PROTECTION	1	U
556.401	WASTE MANAGEMENT	1	U
559.41	ELASTOMERIC PLUG TYPE EXPANSION JOINT (F)	65	LF
561.301	PREFABRICATED EXPANSION JOINT, FINGER JOINT (F)	71	LF
562.1	SILICONE JOINT SEALANT (F)	12	LF
563.23	BRIDGE RAIL T3 (F)	516.7	LF
565.23	BRIDGE APPROACH RAIL T3	4	U
1002.1	REPAIRS OR REPLACEMENTS AS NEEDED - BRIDGE STRUCTURES	*	$
1010.41	QUALITY CONTROL QUALITY ASSURANCE (QC/QA) FOR CONCRETE	*	$

SUMMARY OF ROADWAY QUANTITIES (BRIDGE FUNDED)

ITEM NO.	ITEM DESCRIPTION	QUANTITY	UNIT
202.6	CURB REMOVAL FOR STORAGE	100	LF
403.11	HOT BITUMINOUS PAVEMENT, MACHINE METHOD	383	TON
403.12	HOT BITUMINOUS PAVEMENT, HAND METHOD	4	TON
403.6	PAVEMENT JOINT ADHESIVE	1492	LF
417.	COLD PLANING BITUMINOUS SURFACES	2200	SY
604.0007	POLYETHYLENE LINER	2	U
604.4	RECONSTRUCTING/ADJUSTING CATCH BASIN & DROP INLET	2	LF
606.4175	PORTABLE CONCRETE BARRIER FOR TRAFFIC CONTROL - ANCHORED	260	LF
606.4176	PORTABLE CONCRETE BARRIER FOR TRAFFIC CONTROL - POST-TENSIONED	260	LF
606.95	TEMPORARY TRAFFIC CONTROL BARRIER	450	LF
609.01	STRAIGHT GRANITE CURB	147.5	LF
619.253	PORTABLE CHANGEABLE MESSAGE SIGN (UNIT WEEK)	8	UWK
628.2	SAWED BITUMINOUS PAVEMENT	92	LF
632.0104	RETROREFLECTIVE PAINT PAVE. MARKING, 4" LINE	2800	LF
632.1104	PREFORMED RETROREFLECTIVE TAPE, TYPE I (REMOVABLE) 4" LINE	5600	LF
632.9104	OBLITERATE PAVEMENT MARKING, 4" LINE	2800	LF
670.104	TEMPORARY PORTABLE LIGHTING	2	U
1008.11	ALTERATIONS AND ADDITIONS AS NEEDED - UNANTICIPATED WORK	*	$

SUMMARY OF ROADWAY QUANTITIES (HIGHWAY FUNDED)

ITEM NO.	ITEM DESCRIPTION	QUANTITY	UNIT
202.7	REMOVAL OF GUARDRAIL	4694	LF
203.55541	GUARDRAIL 50' EAGRT PLATFORM ALTERNATE	2	U
203.55551	GUARDRAIL 25' EAGRT PLATFORM ALTERNATE	4	U
606.120	BEAM GUARDRAIL (STANDARD SECTION-STEEL POST)	4575	LF
606.1454	BEAM GUARDRAIL (TERM. UNIT TYPE EAGRT 50 FT.)	2	U
606.1455	BEAM GUARDRAIL (TERM. UNIT EAGRT 25 FT.)	4	U
621.2	RETROREFLECTIVE BEAM GUARDRAIL DELINEATOR	54	EA
621.31	SINGLE DELINEATOR WITH POST	10	EA

INCIDENTIAL ITEMS

ITEM NO.	ITEM DESCRIPTION	QUANTITY	UNIT
618.61	UNIFORMED OFFICERS WITH VEHICLE	*	$
618.7	FLAGGERS	500	HR
619.1	MAINTENANCE OF TRAFFIC	1	U
692.	MOBILIZATION	1	U
698.13	FIELD OFFICE TYPE C	7	MON
699.	MISCELLANEOUS TEMPORARY EROSION AND SEDIMENT CONTROL	*	$
1010.15	FUEL ADJUSTMENT	*	$

* NOT A BID ITEM

SUBDIRECTORY	.DGN LOCATOR	SHEET SCALE
BRC/MiscSheets	15882BR-NOTES	—

STATE OF NEW HAMPSHIRE
DEPARTMENT OF TRANSPORTATION * BUREAU OF BRIDGE DESIGN

TOWN PLYMOUTH BRIDGE NO. 117\143 STATE PROJECT 15882

LOCATION N.H. ROUTE 25 & N.H. ROUTE 3A over BAKER RIVER

CONSTRUCTION NOTES & QUANTITIES

REVISIONS AFTER PROPOSAL	BY	DATE		BY	DATE
	DESIGNED DDT	07/10	CHECKED MGL		08/10
	DRAWN PJP	07/10	CHECKED MGL/DDT		08/10
	QUANTITIES —	—	CHECKED —		—
	ISSUE DATE		FEDERAL PROJECT NO. ----------	SHEET NO. 6	
	REV. DATE				

BRIDGE SHEET 2 OF 19
FILE NUMBER 115-4-3
TOTAL SHEETS 29

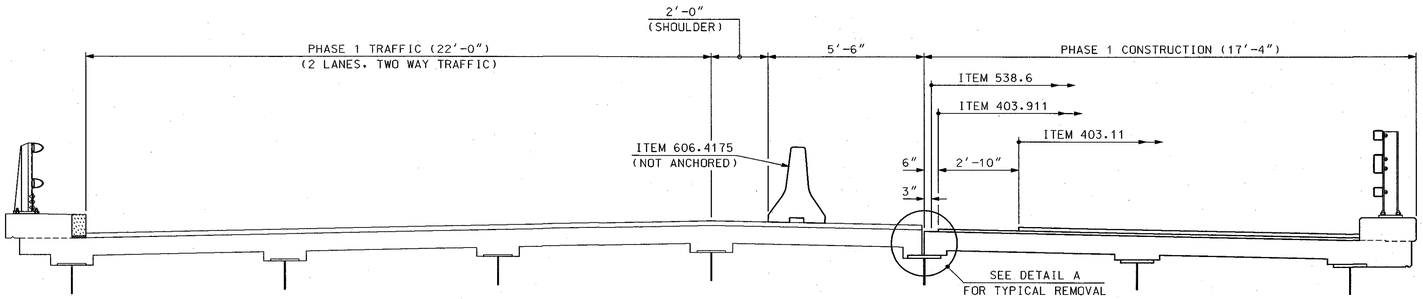

PHASE 1 CONSTRUCTION

SCALE: 3/8" = 1'-0"

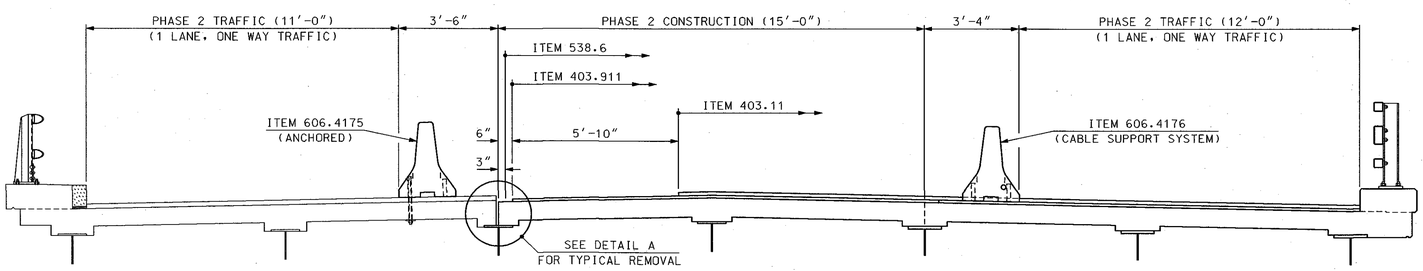

PHASE 2 CONSTRUCTION

SCALE: 3/8" = 1'-0"

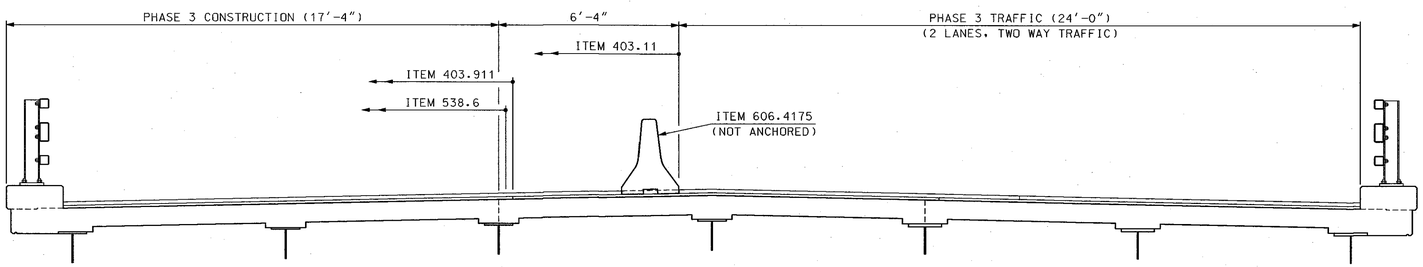

PHASE 3 CONSTRUCTION

SCALE: 3/8" = 1'-0"

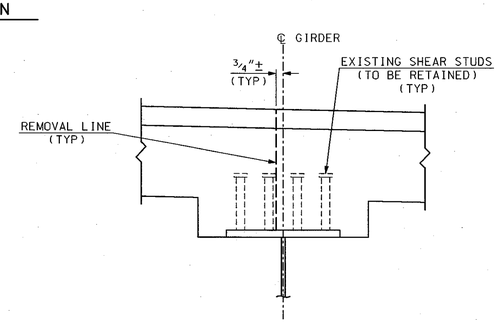

DETAIL A

SCALE: 1 1/2" = 1'-0"

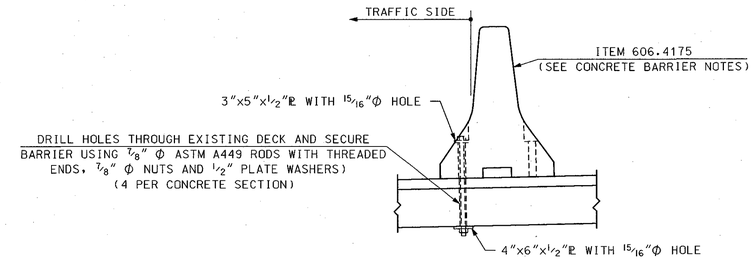

CONCRETE BARRIER (ANCHORED)

SCALE: 3/4" = 1'-0"

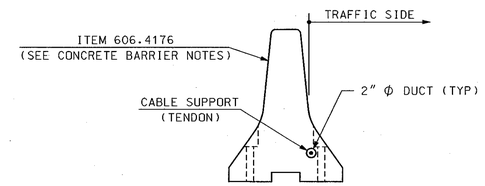

CONCRETE BARRIER (CABLE SUPPORT SYSTEM)

SCALE: 3/4" = 1'-0"

CONCRETE BARRIER NOTES

(1) BARRIER USED DURING DECK REPLACEMENT SHALL BE 20' LONG (ITEMS 606.4175 & 606.4176) AND SHALL BE PLACED FOR THE ENTIRE LENGTH OF DECK. SEE BRIDGE SHEET 4.

(2) ITEM 606.4175, PORTABLE CONCRETE BARRIER FOR TRAFFIC CONTROL- ANCHORED, WILL BE USED DURING ALL 3 CONSTRUCTION PHASES AND SHALL BE ANCHORED TO THE EXISTING DECK ONLY, AS SHOWN IN THE PLANS.

(3) ITEM 606.4176, PORTABLE CONCRETE BARRIER FOR TRAFFIC CONTROL - POST-TENSIONED, SHALL BE SECURED WITH A CABLE SUPPORT SYSTEM DURING PHASE 2 CONSTRUCTION, AS OUTLINED IN THE PLANS & MEETING REQUIREMENTS BELOW:

- (A) A LONGITUDINAL CABLE SUPPORT (TENDON) SHALL BE PROVIDED ON THE TRAFFIC SIDE OF BARRIER IN PLACE OF CONVENTIONAL DECK ANCHORAGE.
- (B) TENDONS SHALL BE PLACED IN A 2" Φ DUCT LOCATED WITHIN THE REINFORCEMENT CAGE OF CONCRETE BARRIER.
- (C) THE TENDONS SHALL BE 0.5" Φ, 7 WIRE STRAND CONFORMING TO AASHTO M203 AND SHALL BE POST-TENSIONED TO 10,000 LBS. ANCHORED BEHIND BOTH ABUTMENTS.
- (D) EACH ANCHORAGE SHALL BE DESIGNED TO RESIST THE POST-TENSIONING FORCE WITH A MINIMUM SAFETY FACTOR OF 1.25.
- (E) ANCHORAGES SHALL BE DESIGNED AND SUBMITTED FOR APPROVAL IN ACCORDANCE WITH 105.02. THE SUBMISSION SHALL INCLUDE SHOP DRAWING DETAILS FOR THE BARRIER AND ANCHORAGE.

(4) ROADWAY ITEM 606.95, TEMPORARY TRAFFIC CONTROL BARRIER, SHALL BE USED AT BOTH BRIDGE APPROACHES AND CONNECTED TO CONCRETE BARRIER PLACED ACROSS THE BRIDGE DECK FOR EACH CONSTRUCTION PHASE. SEE PLAN SHEETS 26 AND 27 FOR BARRIER LAYOUT & DETAILS.

SUBDIRECTORY	.DGN LOCATOR	SHEET SCALE
BRC/Super	15882DECK_PHASES	AS NOTED

STATE OF NEW HAMPSHIRE
DEPARTMENT OF TRANSPORTATION * BUREAU OF BRIDGE DESIGN

TOWN PLYMOUTH BRIDGE NO. 117\143 STATE PROJECT 15882

LOCATION N.H. ROUTE 25 & N.H. ROUTE 3A over BAKER RIVER

DECK CONSTRUCTION SEQUENCE

REVISIONS AFTER PROPOSAL		BY	DATE		BY	DATE
	DESIGNED	DDT	3/10	CHECKED	MGL	08/10
	DRAWN	DDT/PJP	6/10	CHECKED	MGL	08/10
	QUANTITIES	DDT	5/10	CHECKED	MGL	08/10

ISSUE DATE		FEDERAL PROJECT NO.	SHEET NO.	TOTAL SHEETS
REV. DATE		----------	7	29

BRIDGE SHEET 3 OF 19

FILE NUMBER 115-4-3

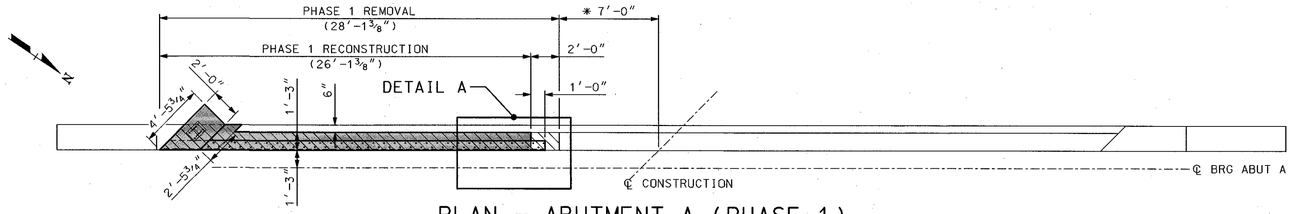

PLAN - ABUTMENT A (PHASE 1)

SCALE: 3/16" = 1'-0"

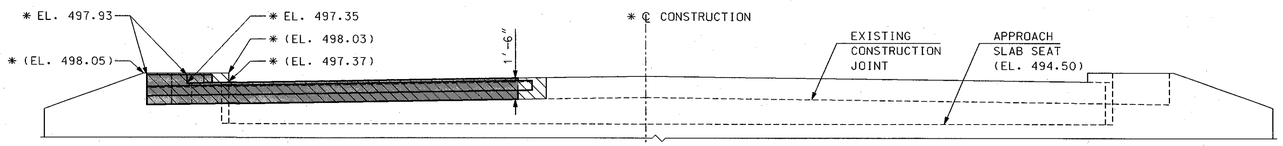

ELEVATION - ABUTMENT A (PHASE 1)

SCALE: 3/16" = 1'-0"

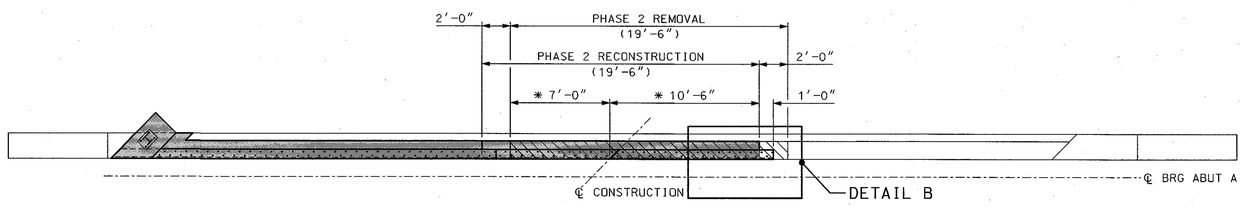

PLAN - ABUTMENT A (PHASE 2)

SCALE: 3/16" = 1'-0"

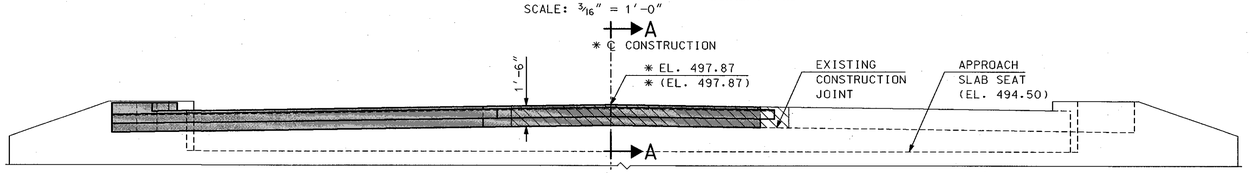

ELEVATION - ABUTMENT A (PHASE 2)

SCALE: 3/16" = 1'-0"

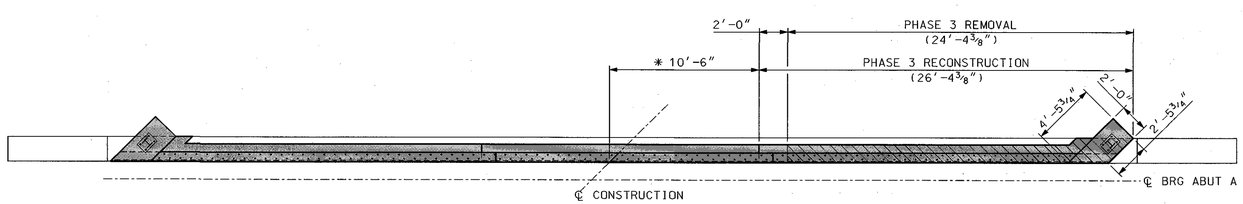

PLAN - ABUTMENT A (PHASE 3)

SCALE: 3/16" = 1'-0"

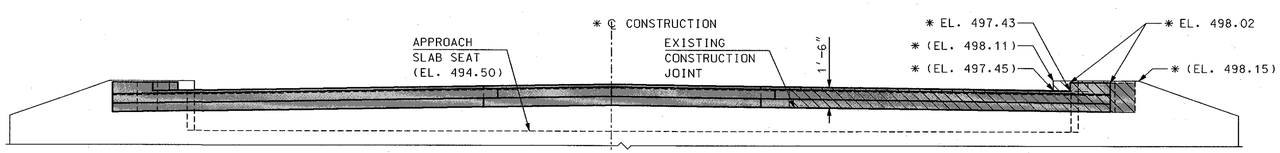

ELEVATION - ABUTMENT A (PHASE 3)

SCALE: 3/16" = 1'-0"

NOTES

1. PROPOSED FINISH GRADE ELEVATIONS ARE SHOWN ALONG THE FACE OF BACKWALL. THE BACKWALL SHALL BE RECONSTRUCTED TO ACCOMODATE THE EXPANSION JOINT ASSEMBLY, SEE BRIDGE SHEETS 12-14.
2. * INDICATES ELEVATION/DIMENSION ALONG THE FACE OF BACKWALL.
3. (EL. XXX.XX) = EXISTING ELEVATION.
   EL. XXX.XX = PROPOSED ELEVATION.
   - LIMITS OF REMOVAL
   - LIMITS OF PROPOSED CONCRETE
4. FOR RAIL POST LAYOUT SEE BRIDGE SHEET 13.

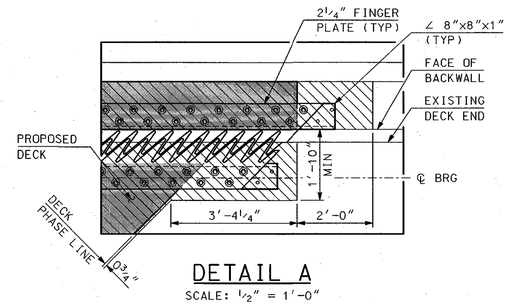

DETAIL A

SCALE: 1/2" = 1'-0"

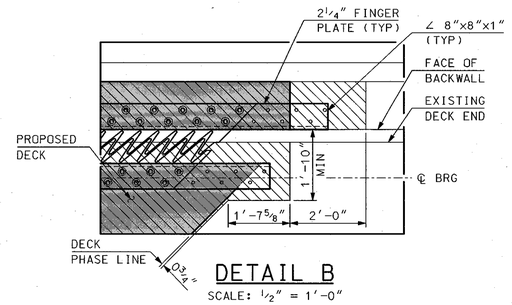

DETAIL B

SCALE: 1/2" = 1'-0"

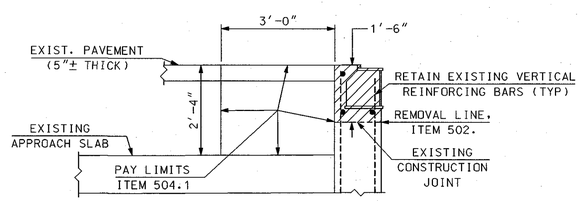

SECTION A-A - REMOVAL

SCALE: 1/2" = 1'-0"

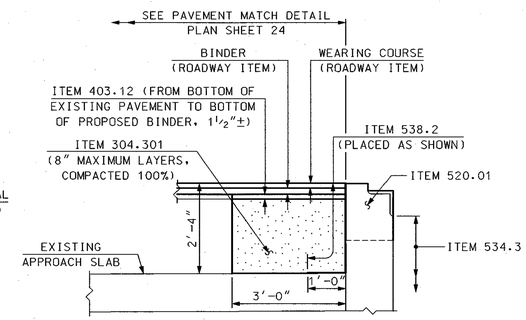

SECTION A-A - RECONSTRUCTION

SCALE: 1/2" = 1'-0"

SUBDIRECTORY	.DGN LOCATOR	SHEET SCALE
BRC/Abutments	15882ABUTA	AS NOTED

STATE OF NEW HAMPSHIRE
DEPARTMENT OF TRANSPORTATION * BUREAU OF BRIDGE DESIGN

TOWN PLYMOUTH — BRIDGE NO. 117\143 — STATE PROJECT 15882

LOCATION N.H. ROUTE 25 & N.H. ROUTE 3A over BAKER RIVER

ABUTMENT A RECONSTRUCTION

REVISIONS AFTER PROPOSAL		BY	DATE		BY	DATE
	DESIGNED	DDT	07/10	CHECKED	MGL	08/10
	DRAWN	DDT/PJP	07/10	CHECKED	MGL	08/10
	QUANTITIES	DDT	07/10	CHECKED	MGL	08/10

ISSUE DATE — FEDERAL PROJECT NO. ---------- — SHEET NO. 8
REV. DATE

BRIDGE SHEET 4 OF 19
FILE NUMBER 115-4-3
TOTAL SHEETS 29

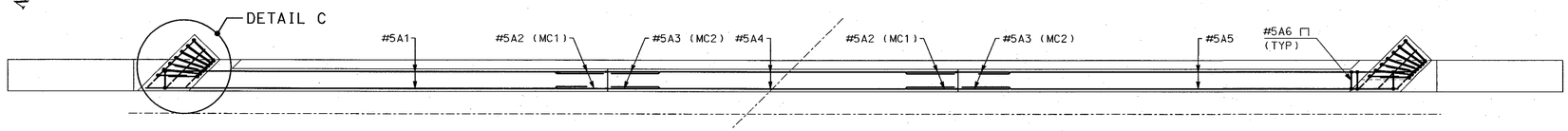

PLAN

SCALE: 1/4" = 1'-0"

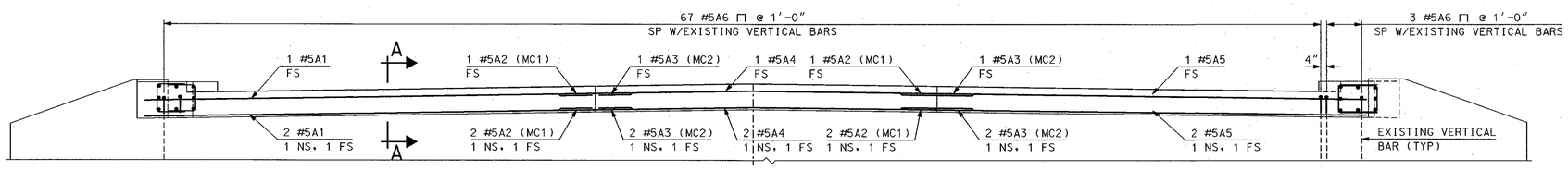

ELEVATION

SCALE: 1/4" = 1'-0"

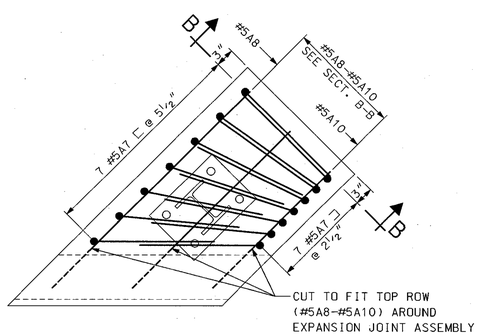

DETAIL C

(SOUTH CURB SHOWN, NORTH SIMILAR)
SCALE: 1" = 1'-0"

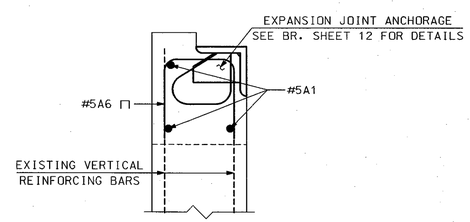

SECTION A-A

SCALE: 1" = 1'-0"

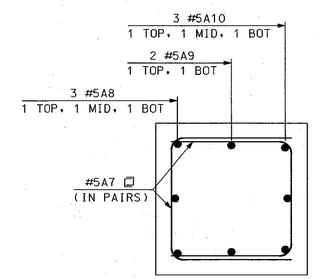

SECTION B-B

SCALE: 1" = 1'-0"

STATE OF NEW HAMPSHIRE

DEPARTMENT OF TRANSPORTATION * BUREAU OF BRIDGE DESIGN

TOWN PLYMOUTH BRIDGE NO. 117\143 STATE PROJECT 15882

LOCATION N.H. ROUTE 25 & N.H. ROUTE 3A over BAKER RIVER

ABUTMENT A REINFORCING

BRIDGE SHEET 5 OF 19

REVISIONS AFTER PROPOSAL

	BY	DATE		BY	DATE
DESIGNED	DDT	07/10	CHECKED	MGL	08/10
DRAWN	DDT	07/10	CHECKED	MGL	08/10
QUANTITIES	DDT	07/10	CHECKED	MGL	08/10

FILE NUMBER 115-4-3

SUBDIRECTORY	.DGN LOCATOR	SHEET SCALE
BRC/Abutments	15882ABUTA	AS NOTED

ISSUE DATE

REV. DATE

FEDERAL PROJECT NO. ----------

SHEET NO. 9

TOTAL SHEETS 29

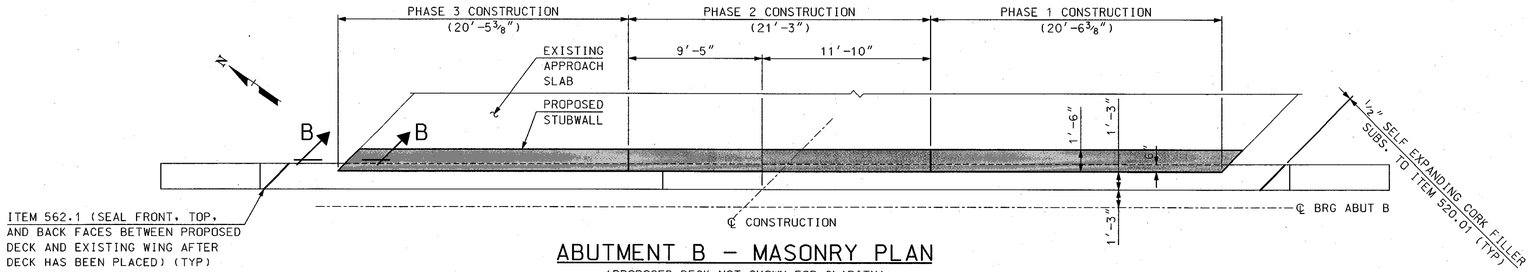

ABUTMENT B – MASONRY PLAN

(PROPOSED DECK NOT SHOWN FOR CLARITY)
SCALE: 3/16" = 1'-0"

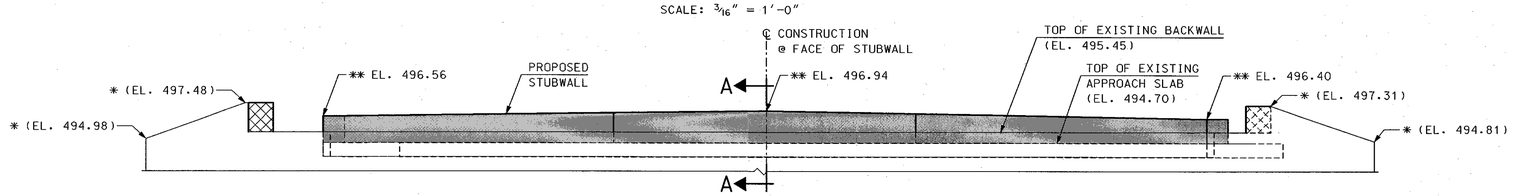

ABUTMENT B – MASONRY ELEVATION

(PROPOSED DECK NOT SHOWN FOR CLARITY)
SCALE: 3/16" = 1'-0"

NOTES

1. * = ELEVATION ALONG THE FACE OF BACKWALL.
   ** = ELEVATION ALONG FACE OF STUBWALL
2. (EL. XXX.XX) = EXISTING ELEVATION.
   EL. XXX.XX = PROPOSED ELEVATION.

LIMITS OF REMOVAL

LIMITS OF PROPOSED CONCRETE

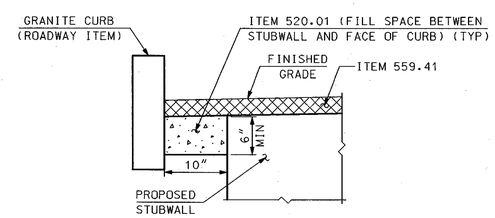

SECTION B-B – CURB DETAIL

SCALE: 1" = 1'-0"

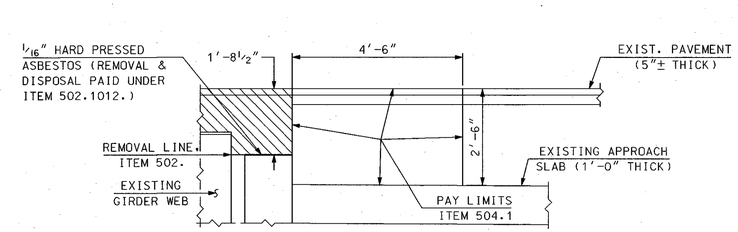

SECTION A-A – REMOVAL

SCALE: 1/2" = 1'-0"

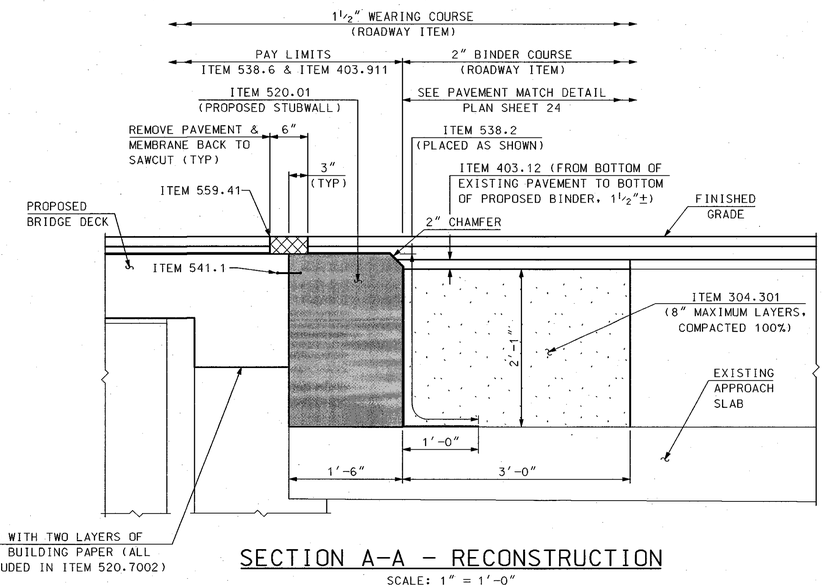

SECTION A-A – RECONSTRUCTION

SCALE: 1" = 1'-0"

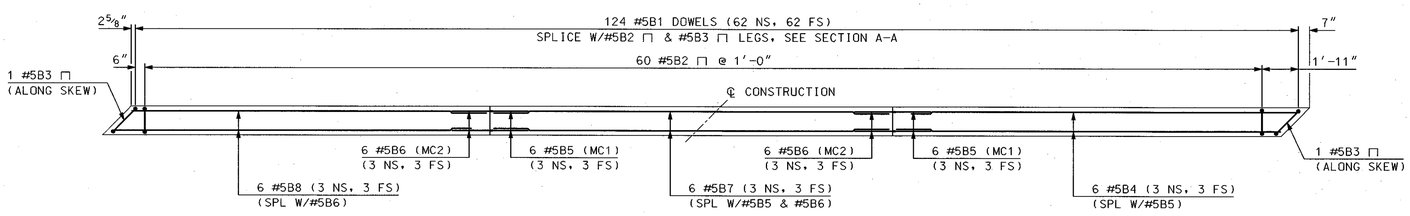

ABUTMENT B STUBWALL – REINFORCING PLAN

SCALE: 1/4" = 1'-0"

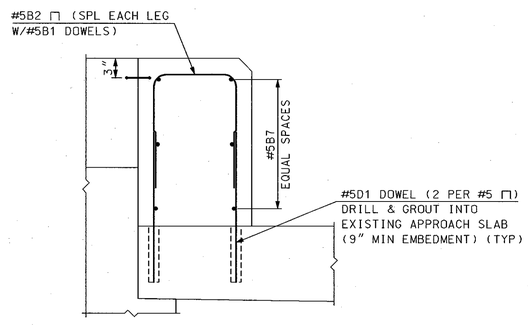

SECTION A-A – REINFORCEMENT

SCALE: 1" = 1'-0"

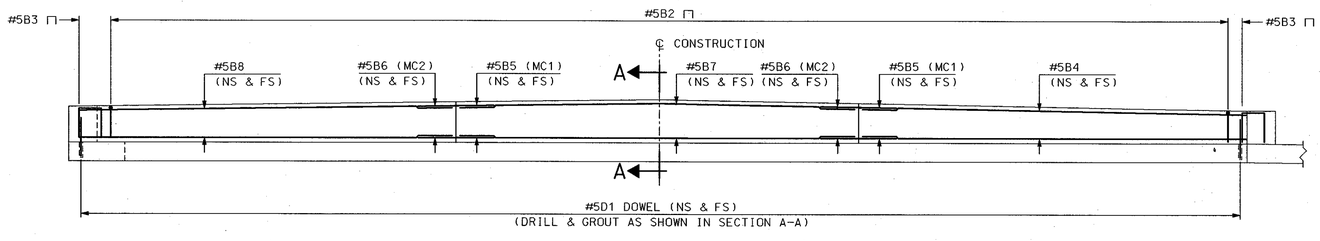

ABUTMENT B STUBWALL – REINFORCING ELEVATION

SCALE: 1/4" = 1'-0"

SUBDIRECTORY	.DGN LOCATOR	SHEET SCALE
BRC/Abutments	15882ABUTB	AS NOTED

STATE OF NEW HAMPSHIRE
DEPARTMENT OF TRANSPORTATION * BUREAU OF BRIDGE DESIGN

TOWN PLYMOUTH BRIDGE NO. 117\143 STATE PROJECT 15882

LOCATION N.H. ROUTE 25 & N.H. ROUTE 3A over BAKER RIVER

ABUTMENT B MASONRY & REINFORCING

BRIDGE SHEET 6 OF 19

REVISIONS AFTER PROPOSAL

	BY	DATE		BY	DATE
DESIGNED	DDT	07/10	CHECKED	MGL	08/10
DRAWN	DDT	07/10	CHECKED	MGL	08/10
QUANTITIES	DDT	07/10	CHECKED	MGL	08/10

FILE NUMBER 115-4-3

ISSUE DATE	FEDERAL PROJECT NO.	SHEET NO.	TOTAL SHEETS
REV. DATE	----------	10	29

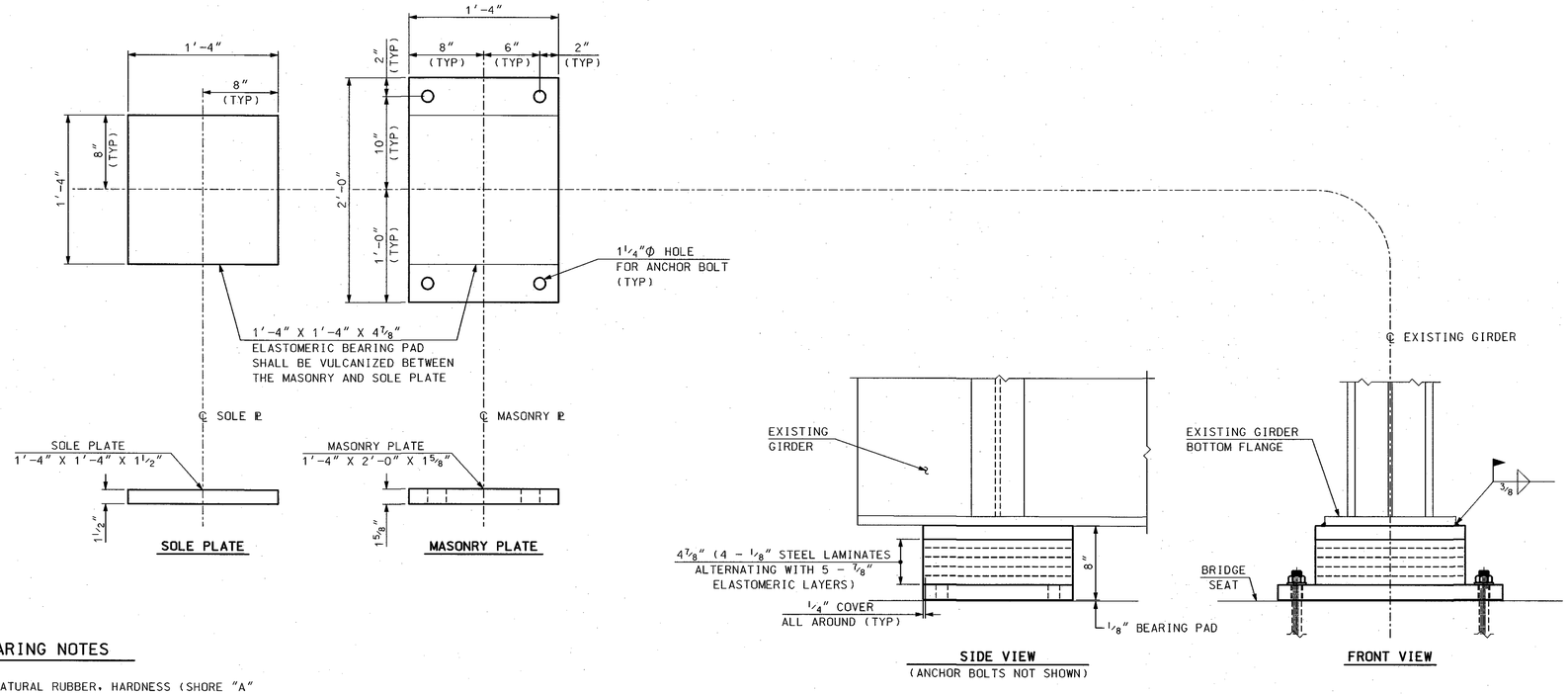

ELASTOMERIC BEARING ASSEMBLY- ABUTMENT A

(ITEM 548.21 - 7 REQUIRED)

SCALE: 1 1/2" = 1'-0"

ELASTOMERIC BEARING NOTES

(1) THE ELASTOMERIC BEARING PADS SHALL BE VIRGIN NATURAL RUBBER, HARDNESS (SHORE "A" DUROMETER) OF 60, GRADE 3.

(2) COST OF BEARING ASSEMBLIES, INCLUDING ELASTOMER, STEEL PLATES, ANCHOR BOLTS AND BOLSTERS SHALL BE PAID FOR AS ELASTOMERIC BEARING ASSEMBLIES (F), ITEM 548.21 AT ABUTMENT A AND ITEM 548.22 AT PIERS.

(3) DESIGN CRITERIA ARE LISTED IN TABLE BELOW:

SERVICE I DESIGN LOADS & MOVEMENT - DESIGN METHOD A		
LOCATION	ABUTMENT A	PIERS 1 & 2
NON-COMPOSITE DEAD LOAD	25.3 KIPS	98 KIPS
SUPERIMPOSED DEAD LOAD (DC + DW)	7.8 KIPS	29.3 KIPS
LIVE LOAD (HL-93 + LANE)	64.66 KIPS	122.43 KIPS
LIVE LOAD (MAX ROTATION)	48.48 KIPS	90.17 KIPS
ROTATION	0.010 RADIANS	0.009 RADIANS
COMPRESSIVE DEFLECTION	0.088 IN	0.090 IN
TOTAL MOVEMENT (ΔT = 125°F)	2.46 IN	1.71 IN
SHEAR DEFORMATION	2.12 IN	1.47 IN

(4) EXISTING ANCHOR BOLTS SHALL BE CUT, GROUND FLUSH TO THE EXISTING BEARING SURFACE, AND COATED WITH AN APPROVED ZINC-RICH PRIMER, COST SUBSIDIARY TO ITEM 502.

(5) NEW ANCHOR BOLTS SHALL BE GALVANIZED AND FABRICATED IN ACCORDANCE WITH SECTION 550.2.5 OF THE NHDOT STANDARD SPECIFICATIONS, 2006 AS AMENDED.

(6) ALL BEARING PLATES (BOLSTER, SOLE, LOAD, BEARING, AND MASONRY) SHALL CONFORM TO AASHTO M 270 GRADE 50 (ASTM A709 GRADE 50) AND SHALL BE PAINTED. THE STEEL REINFORCING PLATES (STEEL LAMINATES) SHALL CONFORM TO AASHTO M 270 GRADE 50 (ASTM A709 GRADE 50).

(7) SURFACE FINISH OF ALL PLATES SHALL BE IN ACCORDANCE WITH AASHTO LRFD BRIDGE CONSTRUCTION SPECIFICATIONS, SECTION 11.4.6.

(8) LOAD PLATES SHALL BE VULCANIZED TO THE ELASTOMER PRIOR TO PAINTING. ALL SURFACES THAT ARE TO BE BONDED TO THE ELASTOMER SHALL BE BLAST CLEANED AS SPECIFIED IN SSPC-SP 10 PRIOR TO VULCANIZING.

(9) THE TEMPERATURE OF THE STEEL ADJACENT TO THE ELASTOMER SHALL NOT EXCEED 200° F DURING WELDING PROCESSES. TEMPERATURE SHALL BE CONTROLLED BY WELDING PROCEDURES AND TEMPERATURE INDICATING CRAYON OR OTHER DEVICES APPROVED BY THE ENGINEER. ALL PLATES SHALL BE FLAT AND TRUE AFTER WELDING.

(10) FOLLOWING THE MANUFACTURE OF ELASTOMERIC BEARINGS AND VERIFICATION OF THE INTERNAL STEEL LAMINATES, THE PIN GROOVE OPENINGS SHALL BE COATED WITH AN APPROVED ASPHALTIC SEALER AND THE SPACE FILLED WITH SILICONE CAULKING.

(11) BEARINGS SHOULD BE INSTALLED AT TEMPERTURES BETWEEN 20°F AND 70°F. INSTALLATION TEMPERATURES OUTSIDE THIS RANGE WILL REQUIRE ADJUSTMENT.

(12) THE FABRICATOR SHALL CLEARLY MARK THE FRONT OF THE BEARING ASSEMBLIES TO ENSURE PROPER ORIENTATION IN THE FIELD.

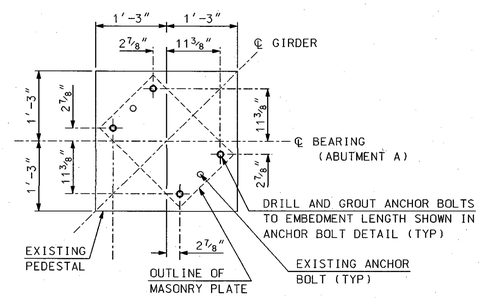

ANCHOR BOLT LAYOUT

SCALE: 3/4" = 1'-0"

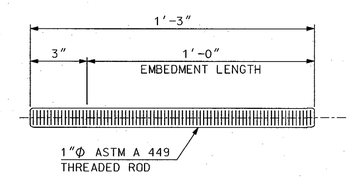

ANCHOR BOLT DETAIL

(28 REQUIRED)

SCALE: 3" = 1'-0"

STATE OF NEW HAMPSHIRE

DEPARTMENT OF TRANSPORTATION * BUREAU OF BRIDGE DESIGN

TOWN PLYMOUTH | BRIDGE NO. 117\143 | STATE PROJECT 15882

LOCATION N.H. ROUTE 25 & N.H. ROUTE 3A over BAKER RIVER

BEARING ASSEMBLY DETAILS - ABUTMENT A

REVISIONS AFTER PROPOSAL			BY	DATE		BY	DATE
		DESIGNED	DDT	4/10	CHECKED	MGL	08/10
		DRAWN	DDT/PJP	4/10	CHECKED	MGL	08/10
		QUANTITIES	DDT	4/10	CHECKED	MGL	08/10
		ISSUE DATE		FEDERAL PROJECT NO.		SHEET NO.	
		REV. DATE		----------		11	

BRIDGE SHEET 7 OF 19

FILE NUMBER 115-4-3

TOTAL SHEETS 29

SUBDIRECTORY	.DGN LOCATOR	SHEET SCALE
BRC/Abutments	15882BRGS_ABUTA	AS NOTED

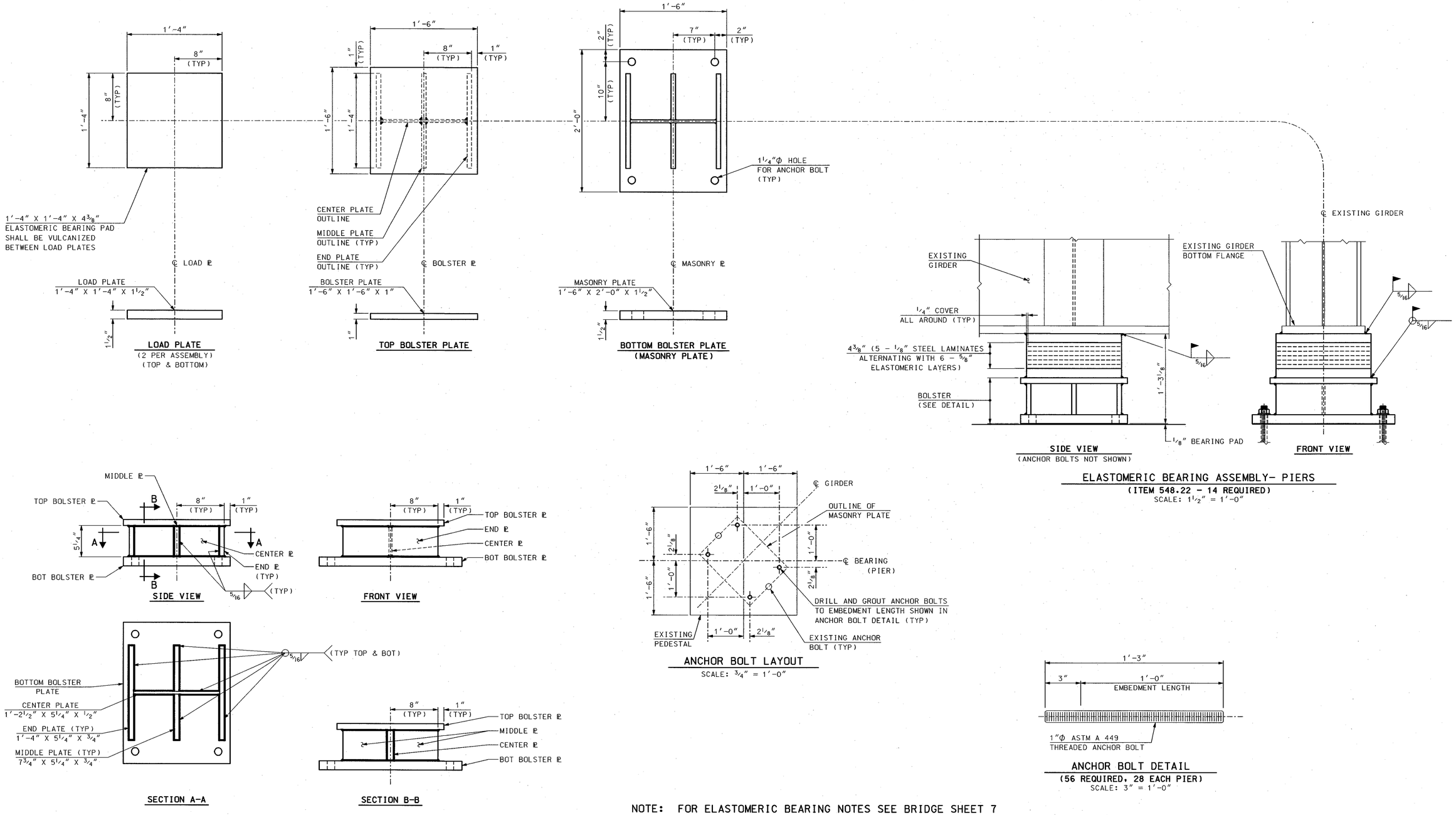

ELASTOMERIC BEARING ASSEMBLY- PIERS
(ITEM 548.22 - 14 REQUIRED)
SCALE: 1 1/2" = 1'-0"

ANCHOR BOLT LAYOUT
SCALE: 3/4" = 1'-0"

ANCHOR BOLT DETAIL
(56 REQUIRED, 28 EACH PIER)
SCALE: 3" = 1'-0"

BOLSTER DETAILS
SCALE: 1 1/2" = 1'-0"

NOTE: FOR ELASTOMERIC BEARING NOTES SEE BRIDGE SHEET 7

STATE OF NEW HAMPSHIRE
DEPARTMENT OF TRANSPORTATION * BUREAU OF BRIDGE DESIGN

TOWN PLYMOUTH BRIDGE NO. 117\143 STATE PROJECT 15882

LOCATION N.H. ROUTE 25 & N.H. ROUTE 3A over BAKER RIVER

BEARING ASSEMBLY DETAILS - PIERS

BRIDGE SHEET 8 OF 19

REVISIONS AFTER PROPOSAL		BY	DATE		BY	DATE
	DESIGNED	DDT	4/10	CHECKED	MGL	08/10
	DRAWN	DDT/PJP	4/10	CHECKED	MGL	08/10
	QUANTITIES	DDT	4/10	CHECKED	MGL	08/10

FILE NUMBER 115-4-3

SUBDIRECTORY	.DGN LOCATOR	SHEET SCALE
BRC/Pier	15882PIER_BRGS	AS NOTED

ISSUE DATE
REV. DATE
FEDERAL PROJECT NO. ----------
SHEET NO. 12
TOTAL SHEETS 29

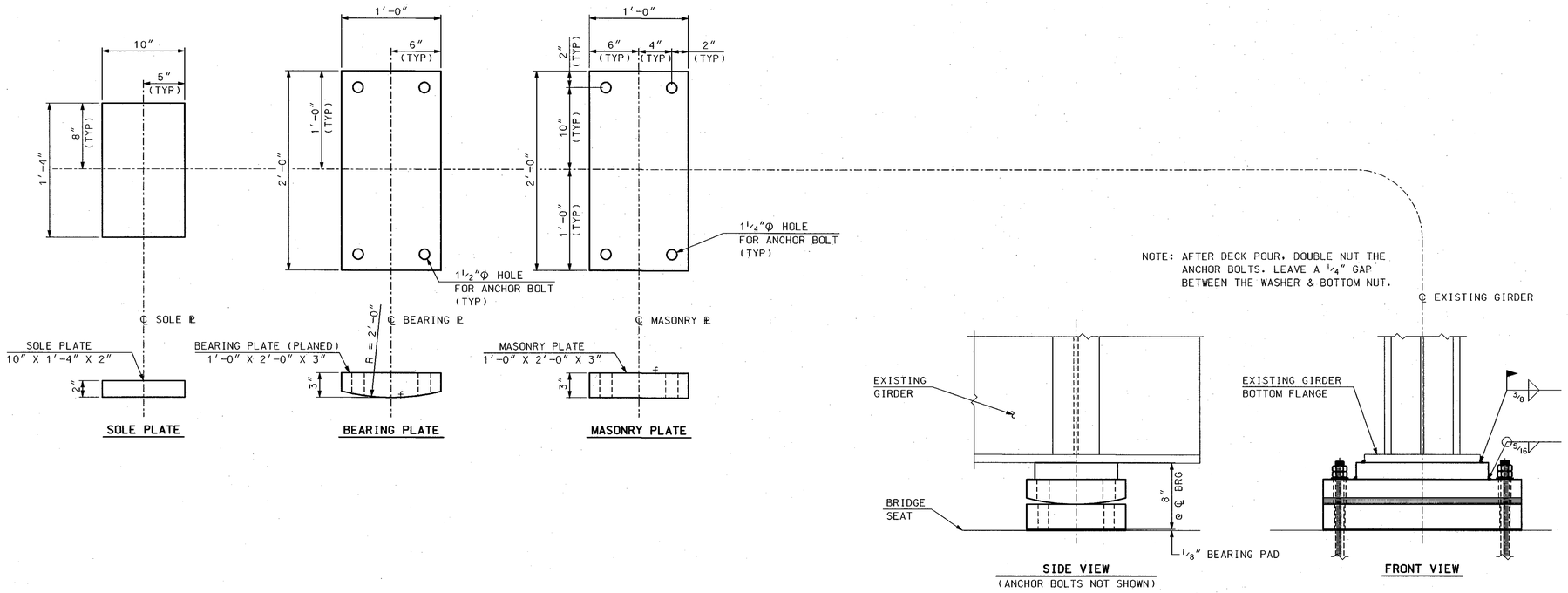

FIXED BRIDGE SHOE DETAILS - ABUTMENT B

(ITEM 550.2 - 7 REQUIRED)

SCALE: 1½" = 1'-0"

FIXED BRIDGE SHOE NOTES

(1) FIXED SHOE ASSEMBLIES, INCLUDING ANCHOR BOLTS, SHALL BE PAID FOR AS ITEM 550.2, BRIDGE SHOES (F).

(2) ALL PLATES SHALL BE FLAT AND TRUE AFTER WELDING.

(3) ALL STEEL PLATES SHALL CONFORM TO AASHTO M 270 GRADE 50 (ASTM A709 GRADE 50), AND PAINTED.

(4) EXISTING ANCHOR BOLTS SHALL BE CUT, GROUND FLUSH TO THE EXISTING BEARING SURFACE, AND COATED WITH AN APPROVED ZINC-RICH PRIMER, COST SUBSIDIARY TO ITEM 502.

(5) ANCHOR BOLTS SHALL BE FABRICATED IN ACCORDANCE WITH SECTION 550.2.5 OF THE NHDOT STANDARD SPECIFICATIONS AND GALVANIZED.

(6) BEARING SURFACES MARKED "f", OR SURFACES IN CONTACT TO BE WELDED, SHALL BE FINISHED IN ACCORDANCE WITH AASHTO LRFD BRIDGE CONSTRUCTION SPECIFICATIONS 2008, SECTION 11.4.6.

(7) THE PREFORMED FABRIC PADS SHALL CONFORM TO SECTION 550.2.6 OF THE NHDOT STANDARD SPECIFICATIONS.

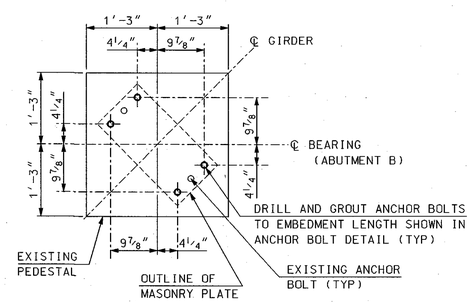

ANCHOR BOLT LAYOUT

SCALE: ¾" = 1'-0"

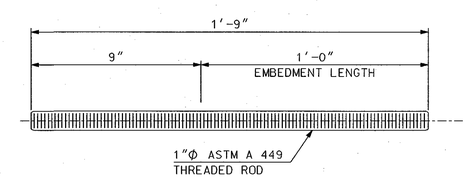

ANCHOR BOLT DETAIL

(28 REQUIRED)

SCALE: 3" = 1'-0"

SUBDIRECTORY	.DGN LOCATOR	SHEET SCALE
BRC/Abutments	15882SHOES_ABUTB	AS NOTED

STATE OF NEW HAMPSHIRE

DEPARTMENT OF TRANSPORTATION * BUREAU OF BRIDGE DESIGN

TOWN PLYMOUTH BRIDGE NO. 117\143 STATE PROJECT 15882

LOCATION N.H. ROUTE 25 & N.H. ROUTE 3A over BAKER RIVER

BRIDGE SHOE DETAILS - ABUTMENT B

BRIDGE SHEET 9 OF 19

REVISIONS AFTER PROPOSAL		BY	DATE		BY	DATE
	DESIGNED	DDT	4/10	CHECKED	MGL	08/10
	DRAWN	DDT/PJP	4/10	CHECKED	MGL	08/10
	QUANTITIES	DDT	4/10	CHECKED	MGL	08/10

ISSUE DATE		FEDERAL PROJECT NO.	SHEET NO.	TOTAL SHEETS
REV. DATE		----------	13	29

FILE NUMBER 115-4-3

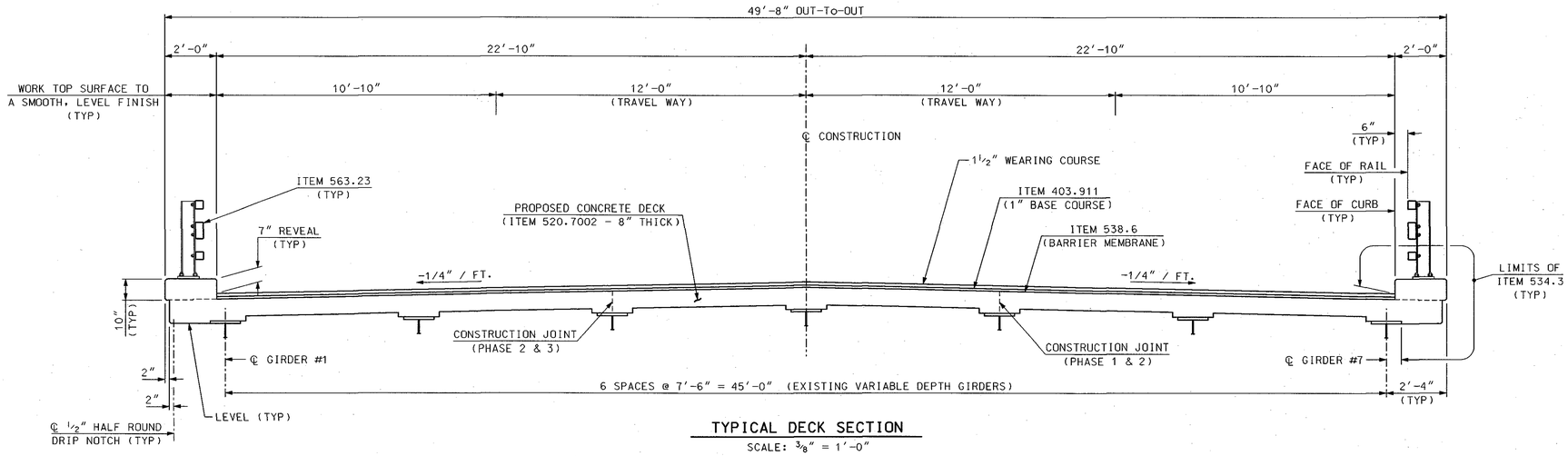

TYPICAL DECK SECTION

SCALE: ⅜" = 1'-0"

ELEVATIONS AT BOTTOM OF CONCRETE DECK											
SPAN 1											
GIRDER	ABUT A	0.1 L	0.2 L	0.3 L	0.4 L	0.5 L	0.6 L	0.7 L	0.8 L	0.9 L	PIER 1
#1	496.55	496.56	496.57	496.56	496.55	496.53	496.51	496.48	496.45	496.42	496.40
#2	496.70	496.71	496.72	496.72	496.71	496.69	496.66	496.63	496.59	496.56	496.54
#3	496.84	496.85	496.86	496.86	496.85	496.83	496.80	496.77	496.73	496.70	496.68
#4	496.98	497.00	497.00	497.01	497.00	496.97	496.94	496.90	496.87	496.84	496.82
#5	496.81	496.82	496.83	496.83	496.82	496.80	496.77	496.73	496.70	496.67	496.64
#6	496.64	496.65	496.66	496.66	496.65	496.63	496.59	496.56	496.52	496.49	496.47
#7	496.47	496.48	496.49	496.49	496.48	496.45	496.42	496.38	496.35	496.32	496.29
SPAN 2											
GIRDER	PIER 1	1.1 L	1.2 L	1.3 L	1.4 L	1.5 L	1.6 L	1.7 L	1.8 L	1.9 L	PIER 2
#1	496.40	496.38	496.37	496.36	496.35	496.33	496.30	496.26	496.21	496.18	496.14
#2	496.54	496.52	496.51	496.50	496.50	496.48	496.44	496.40	496.35	496.31	496.28
#3	496.68	496.66	496.65	496.64	496.63	496.61	496.58	496.53	496.49	496.45	496.41
#4	496.82	496.79	496.78	496.78	496.77	496.75	496.71	496.67	496.62	496.58	496.55
#5	496.64	496.62	496.61	496.60	496.59	496.57	496.54	496.49	496.44	496.40	496.37
#6	496.47	496.44	496.43	496.42	496.42	496.39	496.36	496.31	496.26	496.22	496.19
#7	496.29	496.27	496.26	496.25	496.24	496.22	496.18	496.13	496.08	496.04	496.01
SPAN 3											
GIRDER	PIER 2	2.1 L	2.2 L	2.3 L	2.4 L	2.5 L	2.6 L	2.7 L	2.8 L	2.9 L	ABUT B
#1	496.14	496.13	496.11	496.10	496.09	496.08	496.06	496.03	495.99	495.95	495.90
#2	496.28	496.26	496.25	496.24	496.24	496.23	496.21	496.18	496.14	496.08	496.03
#3	496.41	496.39	496.38	496.38	496.37	496.36	496.34	496.31	496.27	496.21	496.16
#4	496.55	496.53	496.52	496.51	496.50	496.49	496.47	496.44	496.40	496.34	496.29
#5	496.37	496.35	496.34	496.33	496.32	496.31	496.29	496.26	496.21	496.16	496.11
#6	496.19	496.17	496.16	496.15	496.14	496.13	496.11	496.07	496.03	495.98	495.92
#7	496.01	495.99	495.97	495.96	495.96	495.94	495.92	495.89	495.85	495.79	495.74

DECK SLAB ELEVATION NOTES

(1) AFTER THE EXISTING BRIDGE DECK IS REMOVED BUT BEFORE THE DECK FORMS ARE BUILT, ELEVATIONS ON THE TOP FLANGE OF THE GIRDERS ARE TO BE OBTAINED AT POINTS INDICATED IN THE TABLE. THE DIFFERENCE BETWEEN ELEVATIONS OBTAINED AND THOSE SHOWN IN THE TABLE IS THE ACTUAL BLOCKING DISTANCE FROM THE TOP OF GIRDER TO THE BOTTOM OF THE DECK SLAB AT THE CENTERLINE OF THE GIRDER. SEE ELEVATION TABLE AND HAUNCH DETAIL ON THIS SHEET.

(2) ELEVATIONS SHOWN IN THE TABLE ARE BOTTOM OF SLAB ELEVATIONS ADJUSTED FOR TOTAL DEAD LOAD DEFLECTION, LESS THE DEFLECTION DUE TO GIRDER WEIGHT.

(3) NOTIFY ENGINEER AND DO NOT PROCEED WITH SETTING OTHER BLOCKING DISTANCES IF BLOCKING DISTANCES AT ABUTMENTS AND PIERS ARE NOT WITHIN ¼" OF THE VALUES SHOWN.

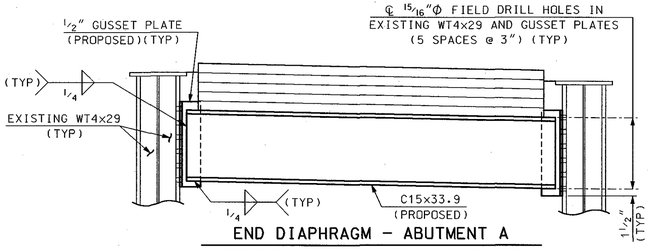

END DIAPHRAGM - ABUTMENT A

(ITEM 550.1, 6 ASSEMBLIES REQUIRED)

SCALE: ¾" = 1'-0"

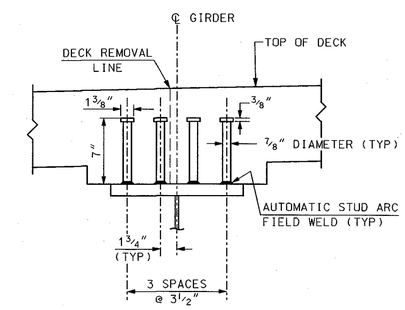

PROPOSED SHEAR CONNECTOR DETAIL

(4 STUDS PER ROW)

SCALE: 1½" = 1'-0"

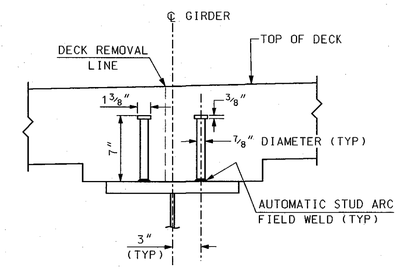

PROPOSED SHEAR CONNECTOR DETAIL

(2 STUDS PER ROW)

SCALE: 1½" = 1'-0"

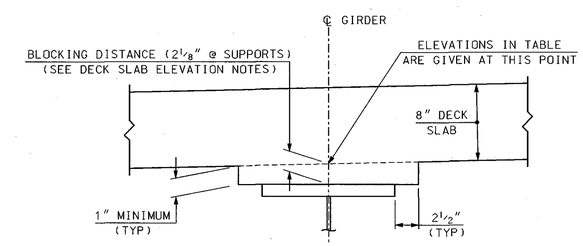

HAUNCH DETAIL

SCALE: 1½" = 1'-0"

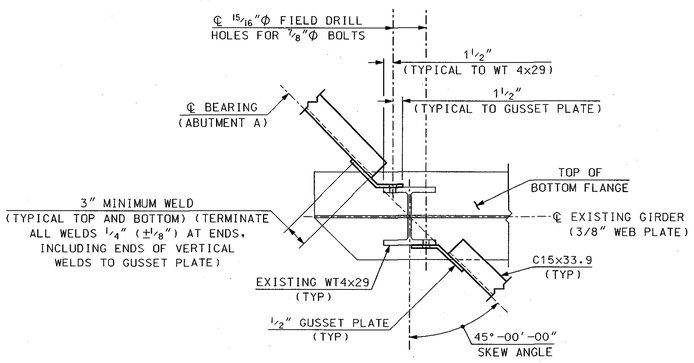

DIAPHRAGM CONNECTION DETAIL

SCALE: 1" = 1'-0"

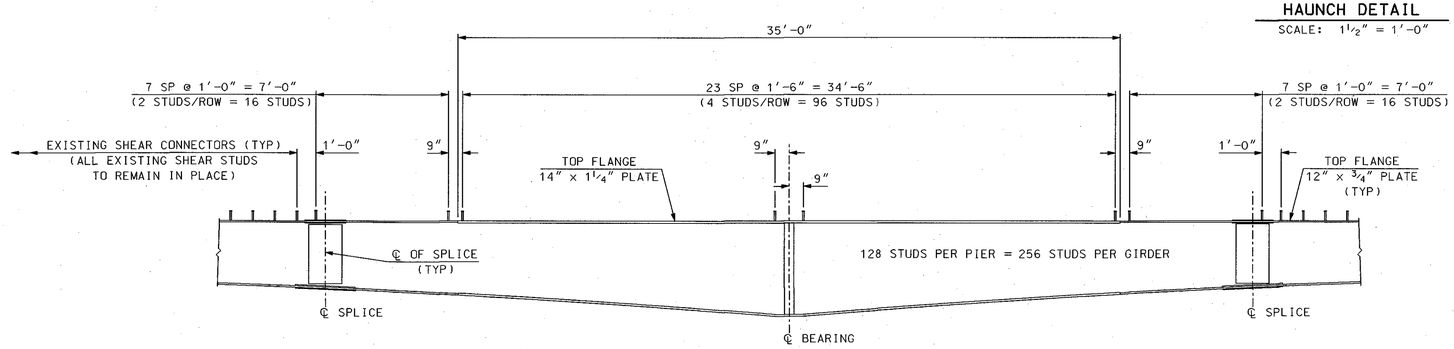

PROPOSED SHEAR CONNECTOR LAYOUT

(TYPICAL @ PIERS)

SCALE: ¼" = 1'-0"

SUBDIRECTORY	.DGN LOCATOR	SHEET SCALE
BRC/Super	15882DECK_SECT	AS NOTED

STATE OF NEW HAMPSHIRE

DEPARTMENT OF TRANSPORTATION * BUREAU OF BRIDGE DESIGN

TOWN PLYMOUTH | BRIDGE NO. 117\143 | STATE PROJECT 15882

LOCATION N.H. ROUTE 25 & N.H. ROUTE 3A over BAKER RIVER

DECK DETAILS

REVISIONS AFTER PROPOSAL		BY	DATE		BY	DATE
	DESIGNED	DDT	3/10	CHECKED	MGL	08/10
	DRAWN	DDT/PJP	6/10	CHECKED	MGL	08/10
	QUANTITIES	DDT	5/10	CHECKED	MGL	08/10
	ISSUE DATE		FEDERAL PROJECT NO.		SHEET NO.	
	REV. DATE		----------		14	

BRIDGE SHEET 10 OF 19

FILE NUMBER 115-4-3

TOTAL SHEETS 29

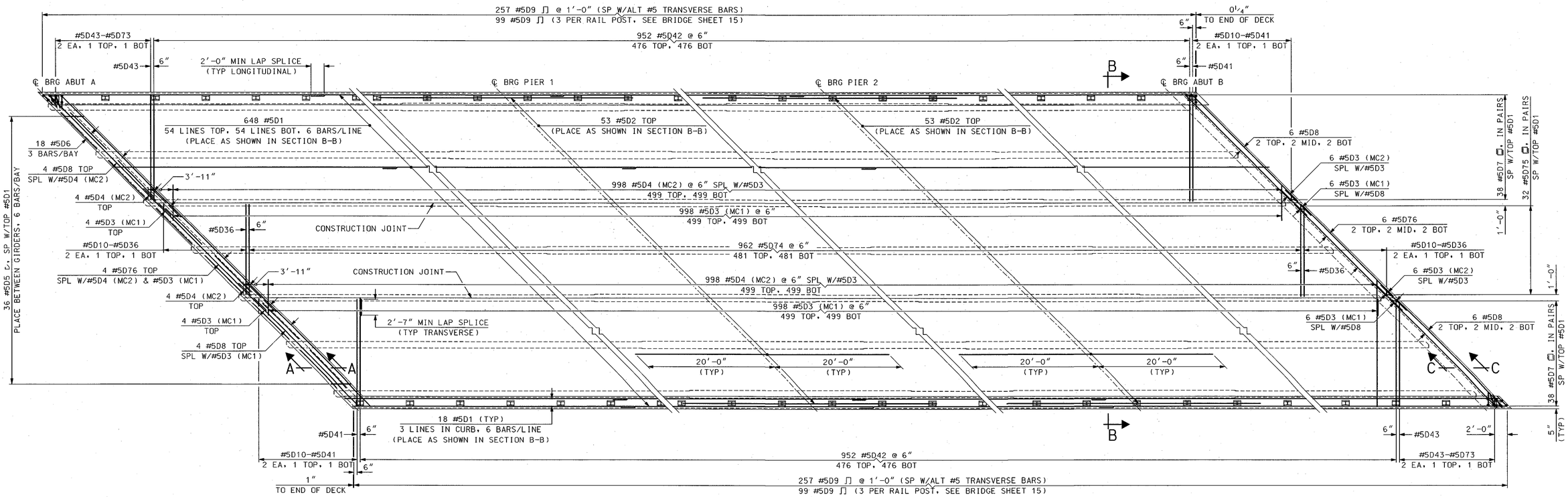

DECK REINFORCING PLAN

SCALE: ⅛" = 1'-0"

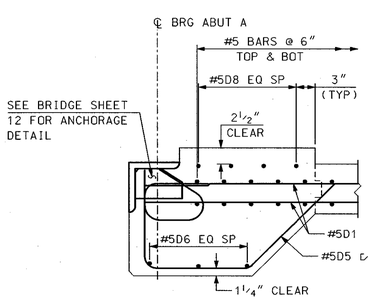

SECTION A-A

SCALE: 1" = 1'-0"

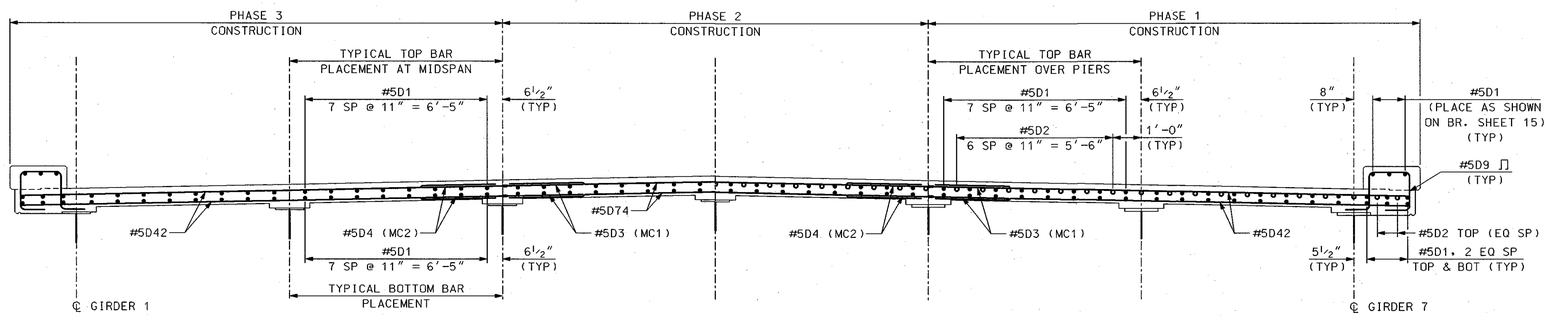

SECTION B-B

SCALE: ⅜" = 1'-0"

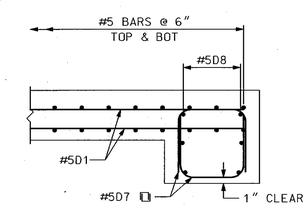

SECTION C-C

SCALE: 1" = 1'-0"

SUBDIRECTORY	.DGN LOCATOR	SHEET SCALE
SUPER	15882DeckBars	AS NOTED

STATE OF NEW HAMPSHIRE

DEPARTMENT OF TRANSPORTATION * BUREAU OF BRIDGE DESIGN

TOWN PLYMOUTH BRIDGE NO. 117\143 STATE PROJECT 15882

LOCATION N.H. ROUTE 25 & N.H. ROUTE 3A over BAKER RIVER

DECK REINFORCEMENT LAYOUT

BRIDGE SHEET 11 OF 19

REVISIONS AFTER PROPOSAL		BY	DATE		BY	DATE
	DESIGNED	DDT	03/10	CHECKED	MGL	08/10
	DRAWN	DDT	08/10	CHECKED	MGL	08/10
	QUANTITIES	DDT	05/10	CHECKED	MGL	08/10

FILE NUMBER 115-4-3

ISSUE DATE | FEDERAL PROJECT NO. | SHEET NO. | TOTAL SHEETS

REV. DATE | ---------- | 15 | 29

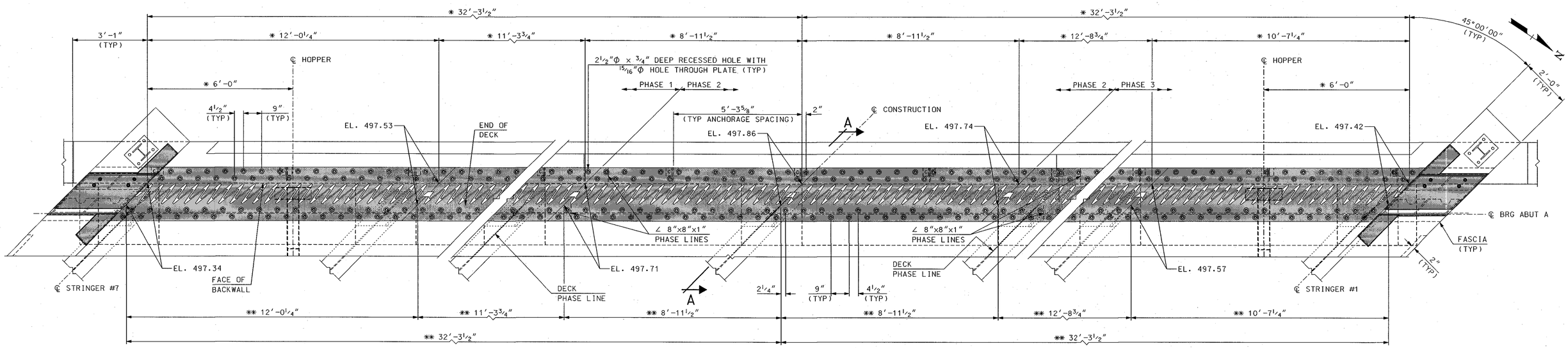

COVER & FINGER PLATES

PARTIAL PLAN

SCALE: ½" = 1'-0"

* = DIMENSIONS MEASURED ALONG FACE OF BACKWALL
** = DIMENSIONS MEASURED ALONG END OF DECK

TEMPERATURE ADJUSTMENT TABLE	
TEMPERATURE	"T"
15° F	10⅞"
30° F	10 11/16"
45° F	10½"
60° F	10¼"
75° F	10 1/16"

"T" DIMENSIONS ARE PERPENDICULAR TO FACE OF BACKWALL.

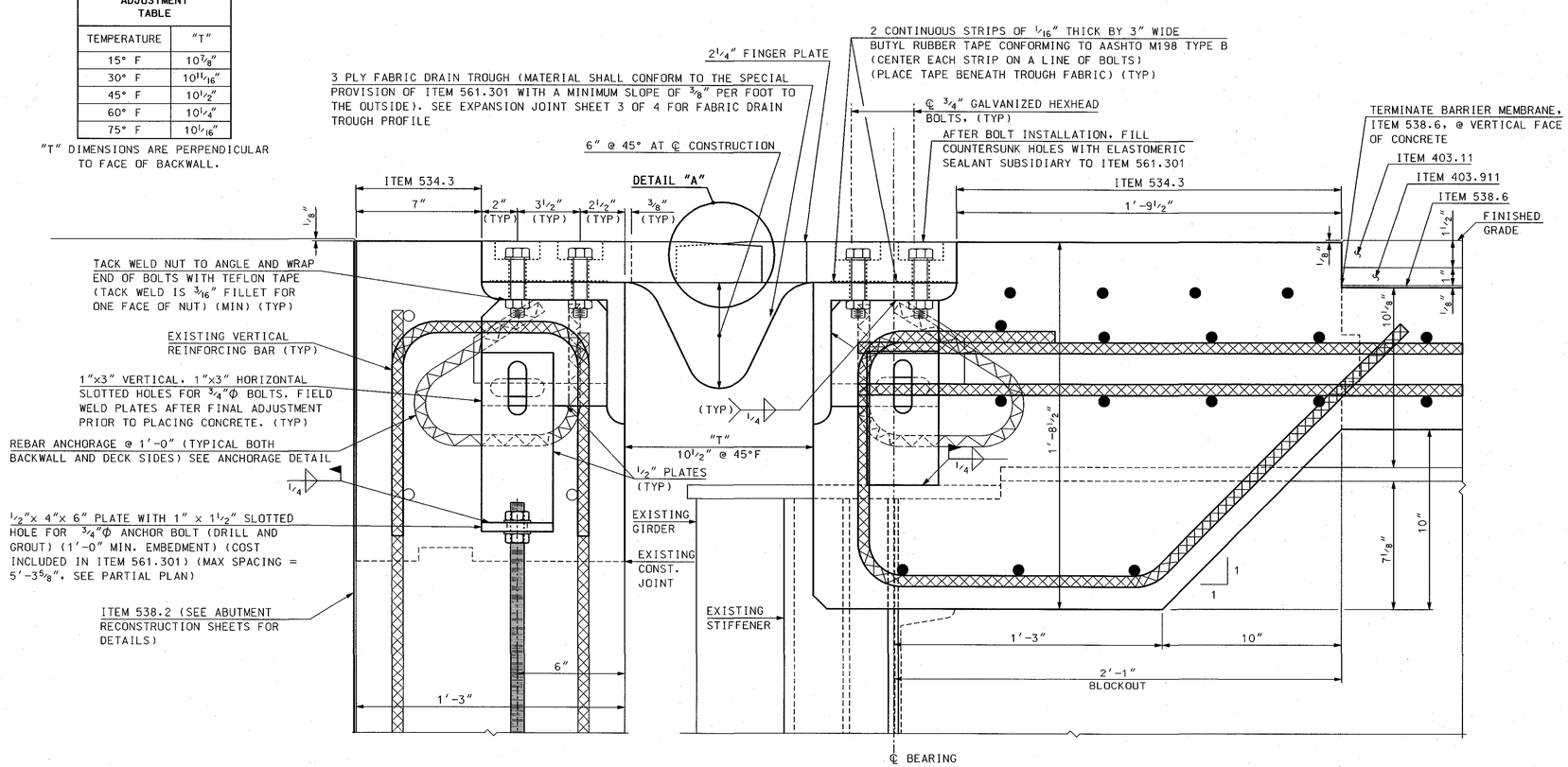

SECTION A-A

SCALE: 3" = 1'-0"

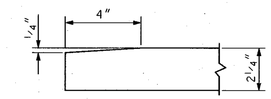

DETAIL "A"

SCALE: 3" = 1'-0"

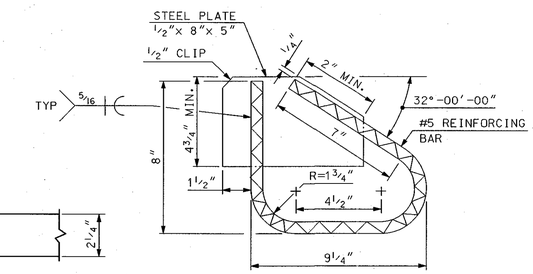

ANCHORAGE DETAIL

SCALE: 3" = 1'-0"

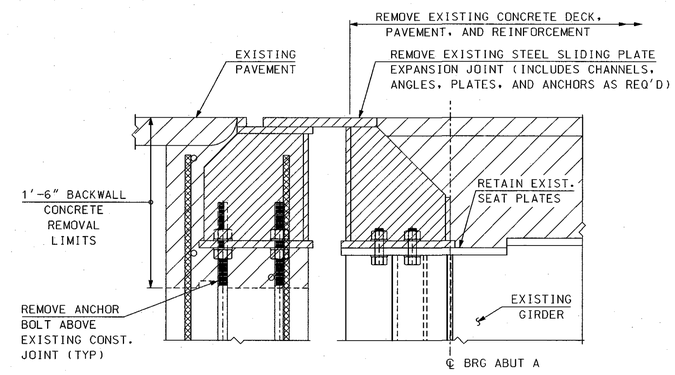

SECTION A-A - REMOVAL

ALL REMOVAL SUBSIDIARY TO ITEM 502.
SCALE: 1½" = 1'-0"

SUBDIRECTORY	.DGN LOCATOR	SHEET SCALE
BRC/ExpJoint	15882FINGER_JT	AS NOTED

STATE OF NEW HAMPSHIRE
DEPARTMENT OF TRANSPORTATION * BUREAU OF BRIDGE DESIGN

TOWN PLYMOUTH — BRIDGE NO. 117\143 — STATE PROJECT 15882

LOCATION N.H. ROUTE 25 & N.H. ROUTE 3A over BAKER RIVER

EXPANSION JOINT (ITEM 561.301) (1 OF 3)

REVISIONS AFTER PROPOSAL	BY	DATE		BY	DATE
DESIGNED	DDT	07/10	CHECKED	MGL	08/10
DRAWN	DDT	07/10	CHECKED	MGL	08/10
QUANTITIES	DDT	07/10	CHECKED	MGL	08/10
ISSUE DATE		FEDERAL PROJECT NO.		SHEET NO.	
REV. DATE		----------		16	

BRIDGE SHEET 12 OF 19
FILE NUMBER 115-4-3
TOTAL SHEETS 29

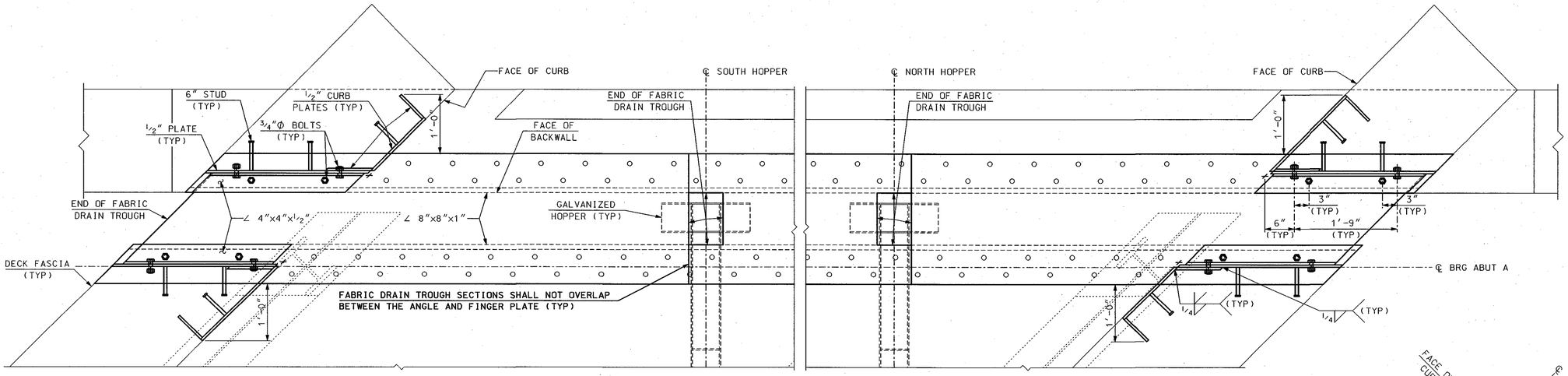

LOWER ASSEMBLY

SCALE: 1" = 1'-0"

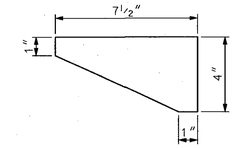

STIFFENER PLATE

SCALE: 3" = 1'-0"

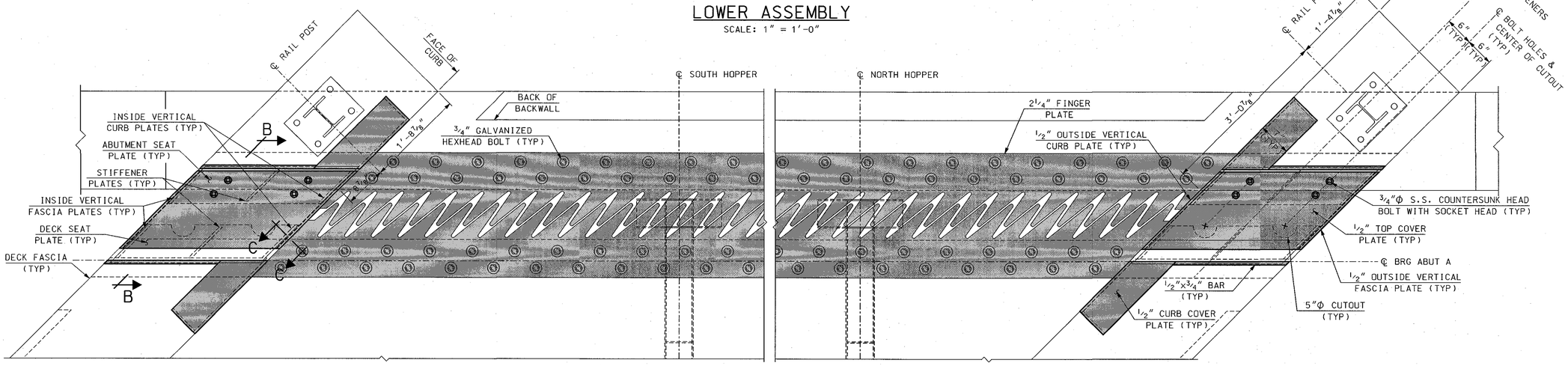

UPPER ASSEMBLY

SCALE: 1" = 1'-0"

COVER & FINGER PLATES

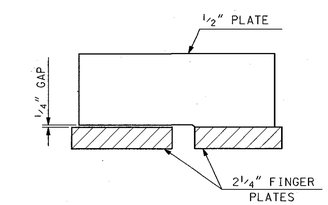

OUTSIDE VERTICAL CURB PLATE DETAIL

SCALE: 1 1/2" = 1'-0"

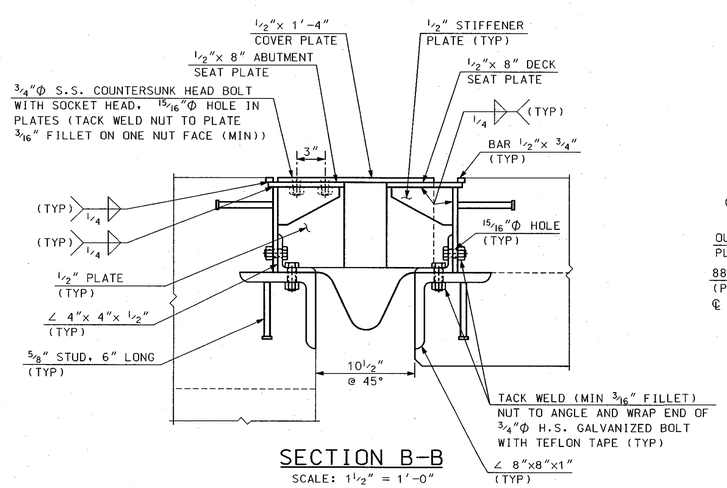

SECTION B-B

SCALE: 1 1/2" = 1'-0"

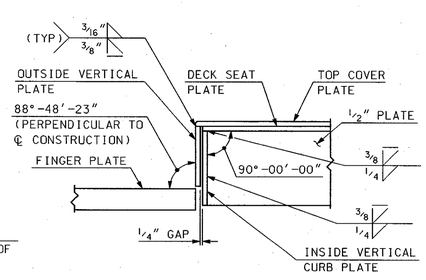

SECTION C-C

SCALE: 1 1/2" = 1'-0"

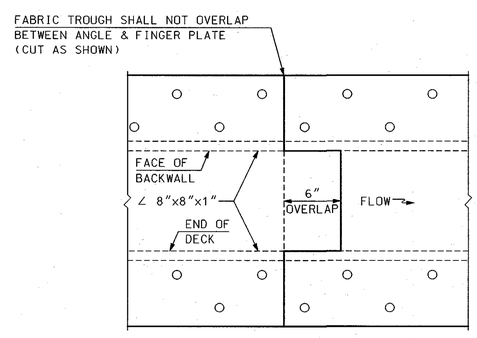

FABRIC TROUGH SPLICE DETAIL

SCALE: 1 1/2" = 1'-0"

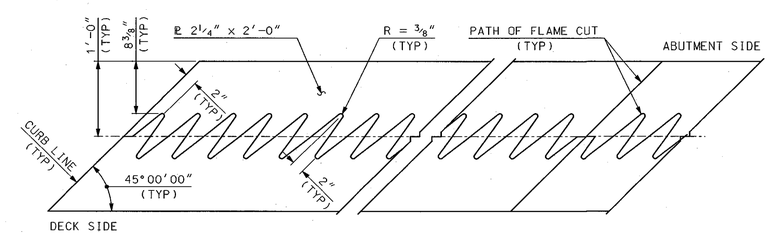

FINGER CUTTING DETAIL

SCALE: 1" = 1'-0"

STATE OF NEW HAMPSHIRE

DEPARTMENT OF TRANSPORTATION * BUREAU OF BRIDGE DESIGN

TOWN PLYMOUTH | BRIDGE NO. 117\143 | STATE PROJECT 15882

LOCATION N.H. ROUTE 25 & N.H. ROUTE 3A over BAKER RIVER

EXPANSION JOINT (ITEM 561.301) (2 OF 3)

BRIDGE SHEET 13 OF 19

SUBDIRECTORY	REVISIONS AFTER PROPOSAL	BY	DATE		BY	DATE
BRC/ExpJoint				DESIGNED DDT	07/10	CHECKED MGL 08/10
.DGN LOCATOR				DRAWN DDT	07/10	CHECKED MGL 08/10
15882FINGER_JT				QUANTITIES DDT	07/10	CHECKED MGL 08/10
SHEET SCALE				ISSUE DATE	FEDERAL PROJECT NO.	SHEET NO.
AS NOTED				REV. DATE	----------	17

FILE NUMBER 115-4-3

TOTAL SHEETS 29

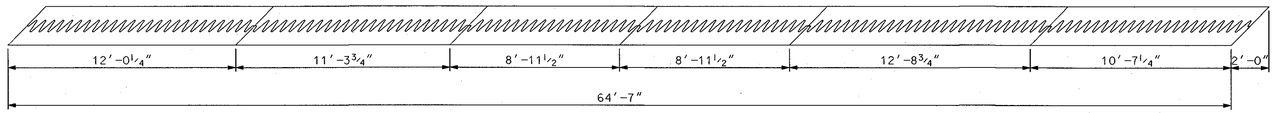

FINGER PLATE PLAN

SCALE: ¼″ = 1′-0″

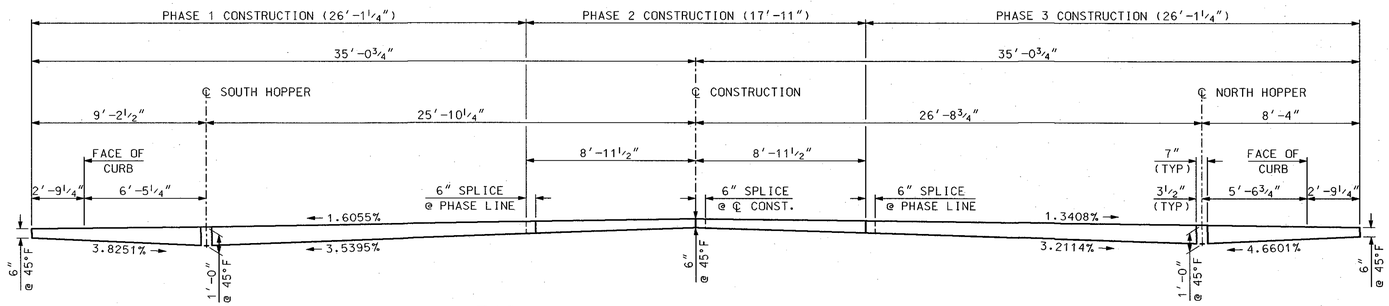

FABRIC DRAIN TROUGH PROFILE

SCALE: ¼″ = 1′-0″

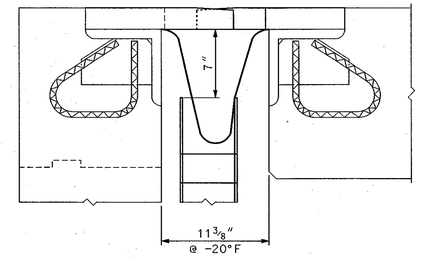

HOPPER SECTION

SCALE: 1½″ = 1′-0″
(MAXIMUM OPENING)

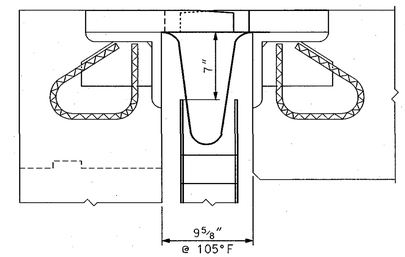

HOPPER SECTION

SCALE: 1½″ = 1′-0″
(MINIMUM OPENING)

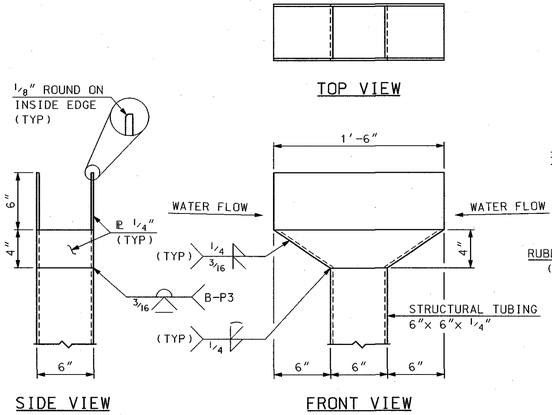

HOPPER DETAIL

SCALE: 1½″ = 1′-0″

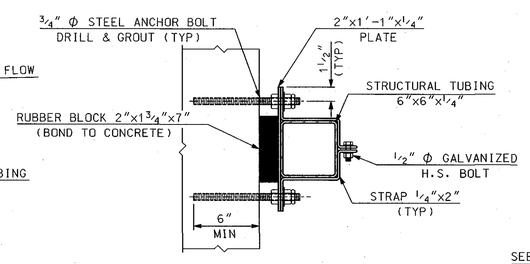

SECTION E-E

SCALE: 1½″ = 1′-0″

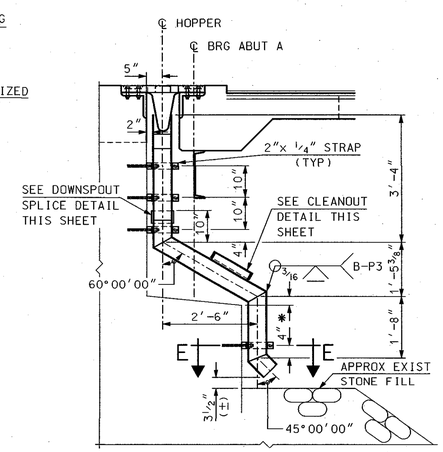

SECTION THROUGH ℄ DOWNSPOUT

NOT TO SCALE

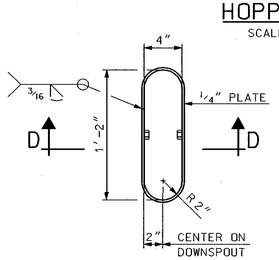

CLEANOUT DETAIL

SCALE: 1½″ = 1′-0″
(COVER REMOVED)

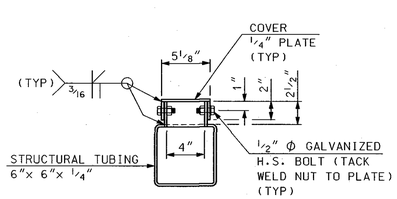

SECTION D-D

SCALE: 1½″ = 1′-0″

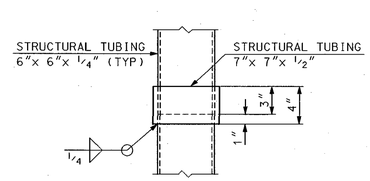

DOWNSPOUT SPLICE DETAIL

SCALE: 1½″ = 1′-0″

EXPANSION JOINT NOTES

(1) EXPANSION JOINT STEEL SHALL BE AASHTO M 270M GRADE 50W (ASTM A 709, GRADE 50W) GALVANIZED, EXCEPT AS OTHERWISE ALLOWED. THE ENTIRE ASSEMBLY SHALL BE PAID FOR AS ITEM 561.301, PREFABRICATED EXPANSION JOINT, FINGER JOINT (F).

(2) SPLICES FOR EXPANSION JOINT STEEL SHALL DEVELOP FULL STRENGTH.

(3) EXPANSION JOINT SHALL BE PRESET TO THE TEMPERATURE ANTICIPATED AT THE TIME OF INSTALLATION. FINAL SETTING IN THE FIELD SHALL BE DETERMINED BY THE ENGINEER (SEE TEMPERATURE ADJUSTMENT TABLE). MAXIMUM ALLOWABLE MOVEMENT SHALL BE 2½″.

(4) PROTECT TOP OF EXPANSION JOINT DURING PLACEMENT OF CONCRETE AND BITUMINOUS PAVEMENT.

(5) JOINT SUPPORT PLATES SHALL BE SHOP WELDED TO THE EXPANSION JOINT STEEL AND SHALL BE VERTICAL AFTER THE JOINT ASSEMBLY HAS BEEN ADJUSTED FOR ROADWAY CROSS-SLOPE AND GRADE.

(6) FASCIA AND CURB PLATES SHALL BE SHOP WELDED AND SHALL BE VERTICAL AFTER THE JOINT ASSEMBLY HAS BEEN ADJUSTED FOR ROADWAY CROSS-SLOPE AND PROFILE GRADE.

(7) IMMEDIATELY AFTER THE JOINT HAS BEEN SECURED TO THE STRUCTURAL STEEL AND BACKWALL, REMOVE SHIPPING DEVICES. WELDING OF SHIPPING DEVICES TO FINGER PLATE SHALL NOT BE ALLOWED.

(8) FINGER PLATES SHALL BE CUT FROM A CONTINUOUS 2′-0″ WIDE x 2¼″ THICK PLATE AS SHOWN ON THE FINGER CUTTING DETAIL, AND FURNISHED IN 6 SECTIONS EACH SIDE OF JOINT. SEE FINGER PLATE PLAN AND CUTTING DETAIL ON BRIDGE SHEET 13.

(9) HOPPERS AND DOWNSPOUTS SHALL BE A-36 GALVANIZED IN ACCORDANCE WITH SECTION 550. PAYMENT FOR HOPPERS, DOWNSPOUTS, BLOCKING PADS AND ALL ATTACHMENTS SHALL BE SUBSIDIARY TO ITEM 561.301.

(10) ELEVATIONS SHOWN AT TOP OF FINGER PLATES ARE ⅛″ LOWER THAN THE PROPOSED FINISHED ROADWAY GRADE.

(11) SEE BRIDGE SHEET THIS SHEET FOR DRAINAGE AND HOPPER DETAILS.

(12) FABRIC TROUGH SHALL BE PREFORMED FABRIC MATERIAL AND SHALL BE CUT DURING SHOP PRE-ASSEMBLY AND SHALL BE SUPPLIED IN 4 LENGTHS WITH 6″ OVERLAP NEAR PHASE CONSTRUCTION JOINT.

(13) TRIM EXCESS FABRIC BEHIND CURB PLATES.

STATE OF NEW HAMPSHIRE

DEPARTMENT OF TRANSPORTATION * BUREAU OF BRIDGE DESIGN

TOWN PLYMOUTH | BRIDGE NO. 117\143 | STATE PROJECT 15882

LOCATION N.H. ROUTE 25 & N.H. ROUTE 3A over BAKER RIVER

EXPANSION JOINT (ITEM 561.301) (3 OF 3)

SUBDIRECTORY	REVISIONS AFTER PROPOSAL		BY	DATE		BY	DATE	BRIDGE SHEET
BRC/ExpJoint		DESIGNED	DDT	07/10	CHECKED	MGL	08/10	14 OF 19
.DGN LOCATOR		DRAWN	DDT	07/10	CHECKED	MGL	08/10	FILE NUMBER
15882FINGER_JT		QUANTITIES	DDT	07/10	CHECKED	MGL	08/10	115-4-3
SHEET SCALE		ISSUE DATE		FEDERAL PROJECT NO.		SHEET NO.		TOTAL SHEETS
AS NOTED		REV. DATE		----------		18		29

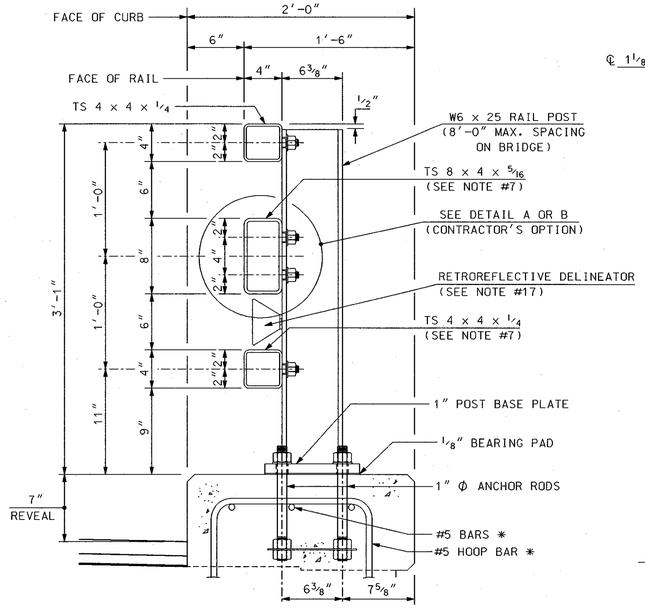

SECTION VIEW

* REINFORCING CAPACITY SHALL MEET OR EXCEED THAT SHOWN

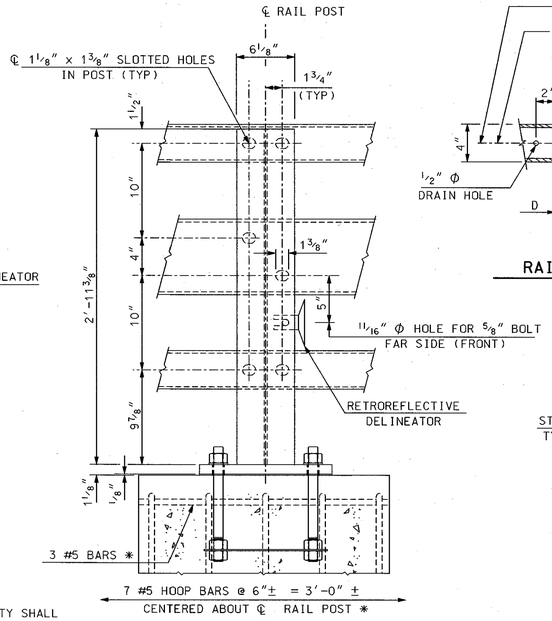

BACK ELEVATION VIEW

POST ASSEMBLY

SCALE: 1 1/2″ = 1′-0″

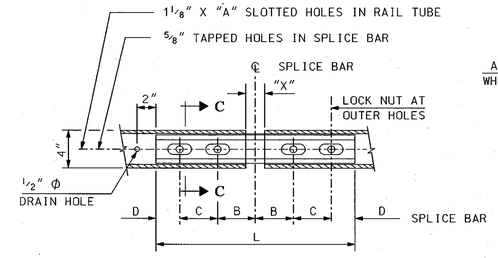

RAIL SPLICE (BOTTOM VIEW)

SCALE: 1 1/2″ = 1′-0″

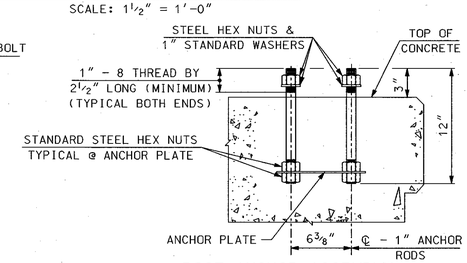

POST ANCHOR ASSEMBLY

SCALE: 1 1/2″ = 1′-0″

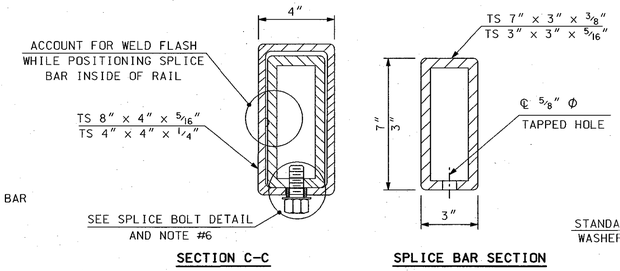

SECTION C-C

SPLICE BAR SECTION

RAIL SPLICE DETAILS

SCALE: 3″ = 1′-0″

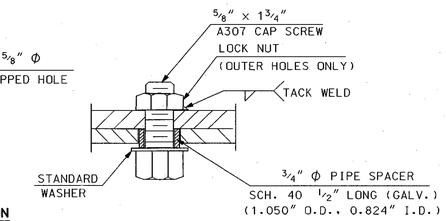

SPLICE BOLT DETAIL

SCALE: 6″ = 1′-0″

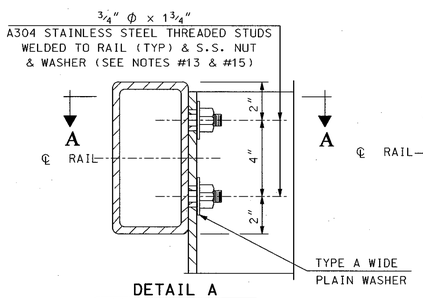

DETAIL A

SCALE: 3″ = 1′-0″

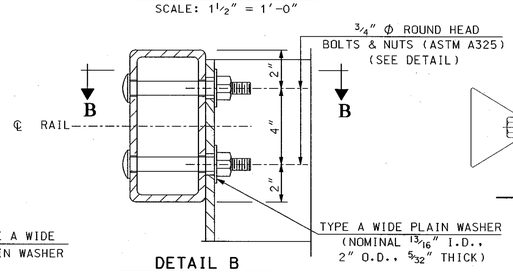

DETAIL B

SCALE: 3″ = 1′-0″

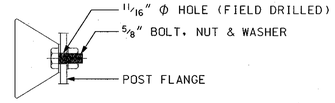

DELINEATOR MOUNTING

N.T.S.

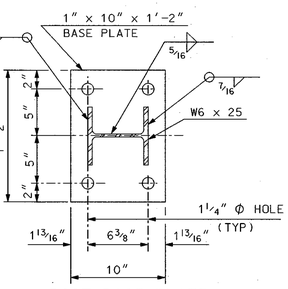

POST BASE PLATE

SCALE: 1 1/2″ = 1′-0″

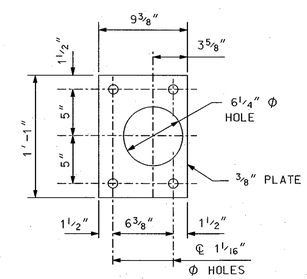

ANCHOR PLATE

SCALE: 1 1/2″ = 1′-0″

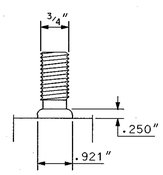

STUD WELD DETAIL

SCALE: 6″ = 1′-0″

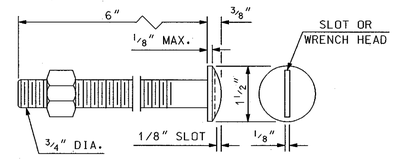

A325 ROUND HEAD BOLT DETAIL

SCALE: 6″ = 1′-0″

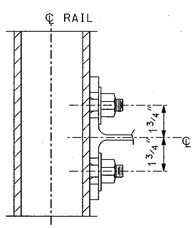

SECTION A-A

SCALE: 3″ = 1′-0″

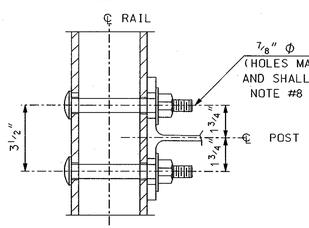

SECTION B-B

SCALE: 3″ = 1′-0″

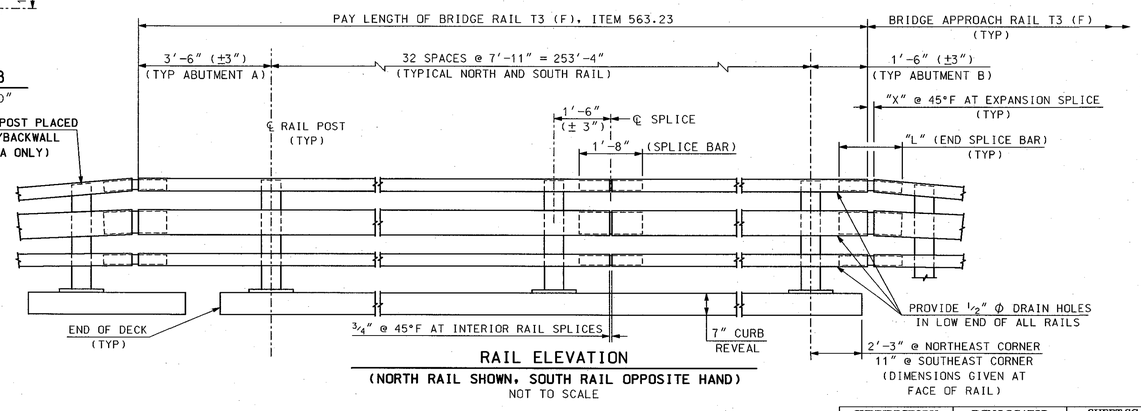

RAIL ELEVATION

(NORTH RAIL SHOWN, SOUTH RAIL OPPOSITE HAND)

NOT TO SCALE

RAIL NOTES

(1) ITEM 563.23, BRIDGE RAIL T3 (F), SHALL INCLUDE POSTS, BASE PLATES, ANCHOR PLATES, ANCHOR RODS, PREFORMED PADS, RAIL ASSEMBLY BOLTS, NUTS, WASHERS, STUDS, STRUCTURAL TUBING, SPLICE BARS, PIPE SPACERS, ALL APPURTENANCES, AND GALVANIZING.

(2) BRIDGE RAIL POSTS SHALL BE SET NORMAL (90 DEGREES) TO THE PROFILE GRADE, EXCEPT ON GRADES OVER 5% WHERE POSTS SHALL BE SET VERTICAL.

(3) ENDS OF RAIL TUBE SECTIONS SHALL BE SAWED OR MILLED AND SHALL BE TRUE AND SMOOTH. ALL CUT EDGES OF ALL MATERIAL SHALL BE GROUND SMOOTH.

(4) EACH PIECE OF RAIL TUBING SHALL BE ATTACHED TO A MINIMUM OF THREE (3) POSTS.

(5) BOLT HOLES SHALL BE DRILLED OR PUNCHED. FLAME CUTTING MAY BE USED TO FINISH SLOTTED HOLES IF MECHANICALLY GUIDED.

(6) AT INTERIOR SPLICES, PIPE SPACERS SHALL BE USED ON ONLY ONE SIDE OF THE SPLICE TO ALLOW MOVEMENT ON THAT SIDE. ALL RAILS IN A SPLICE SHALL RECEIVE THE SAME TREATMENT. AT END SPLICES PIPE SPACERS SHALL BE USED ON BOTH SIDES OF THE SPLICE TO ALLOW MOVEMENT ON EACH SIDE.

(7) MILL OR SHOP TRANSVERSE WELDS SHALL NOT BE PERMITTED ON ANY RAIL ELEMENT. RAIL ELEMENTS USED ON CURVES SHALL USE 3/8″ WALL TUBES AND SHALL BE SHOP FORMED TO THE REQUIRED CURVATURE.

(8) NO PUNCHING, DRILLING, CUTTING OR WELDING SHALL BE PERMITTED AFTER GALVANIZING, EXCEPT AS ALLOWED IN DETAILS A AND B. DAMAGED AREAS OF GALVANIZING SHALL BE THOROUGHLY CLEANED, PRETREATED, AND PAINTED WITH TWO COATS OF ORGANIC ZINC-RICH GALVANIZING REPAIR PAINT, HAVING MIN. 94% ZINC BY WEIGHT, TO A THICKNESS EQUAL TO THE ORIGINAL COATING ACCORDING TO THE STANDARD SPECIFICATIONS AND ASTM A780.

(9) NUTS FOR 1″ Φ THREADED ANCHOR RODS CONNECTING THE BASE PLATE TO THE CONCRETE SHALL BE TIGHTENED TO A SNUG FIT AND GIVEN AN ADDITIONAL 1/8 TURN.

(10) THREADS FOR ANCHOR RODS MAY BE ROLLED OR CUT. IF CUT THREADS ARE USED, BOLT DIAMETER SHALL NOT BE LESS THAN NOMINAL DIAMETER. IF ROLLED THREADS ARE USED, ROD DIAMETER SHALL NOT BE LESS THAN ROOT DIAMETER OF THREADS.

MATERIAL NOTES

(11) STRUCTURAL TUBING SHALL CONFORM TO THE REQUIREMENTS OF ASTM A500, GRADE B. STRUCTURAL STEEL TUBING. RAIL TUBING SHALL MEET THE LONGITUDINAL CHARPY V-NOTCH REQUIREMENTS OF 15 FT. LBS. AT 0° F. FOR ASTM A500, GRADE B, THE TEST SAMPLES SHALL BE TAKEN AFTER FORMING THE TUBES. CHARPY V-NOTCH IS NOT REQUIRED FOR SPLICE TUBES.

(12) RAIL POSTS AND BASE PLATES SHALL CONFORM TO THE REQUIREMENTS OF ASTM A572 GR 50, EXCEPT ANCHOR PLATES MAY BE ASTM A36.

(13) THREADED STUDS AND MATCHING NUTS FOR RAIL-TO-POST ATTACHMENT (DETAIL A) SHALL CONFORM TO ASTM A276 TYPE 304, STAINLESS STEEL, AND SHALL BE TORQUE TESTED PER AWS D1.5, 7.7.1. DETAIL B BOLTS SHALL BE ASTM A325 OR A449. ALL OTHER BOLTS AND NUTS SHALL CONFORM TO ASTM A307 AND ASTM 563 GRADE A RESPECTIVELY OR BETTER, EXCEPT THAT ASTM A307 NUTS MAY BE USED ON THE BOTTOM OF ANCHOR ASSEMBLY. WASHERS SHALL BE HARDENED STEEL COMMERCIAL TYPE A PLAIN WIDE WASHERS AND SHALL MEET THE DIMENSIONAL REQUIREMENTS OF A.N.S.I. B18.22. ANCHOR RODS SHALL CONFORM TO ASTM A449.

(14) ALL STEEL COMPONENTS (EXCEPT STAINLESS) SHALL BE GALVANIZED AFTER FABRICATION IN CONFORMANCE TO AASHTO M232 (ASTM A153) AND AASHTO M111 (ASTM A123). THE GALVANIZING KETTLE SHALL HAVE 0.05 TO 0.09 PERCENT NICKEL. GALVANIZED SURFACES SHALL HAVE A UNIFORM APPEARANCE AND GALVANIZED MATERIAL SHALL BE PROPERLY STORED. IF PAINTING IS REQUIRED SEE SPECIAL PROVISIONS FOR 708.

(15) DETAIL A STUDS SHALL BE WELDED ON AFTER TUBES ARE GALVANIZED BY SPOT GRINDING OFF GALVANIZING, WELDING ON STUDS, THEN TOUCH UP GALVANING PER NOTE #8 ABOVE.

(16) PREFORMED BEARING PADS (1/8″ THICK) SHALL CONFORM TO AASHTO M251.

(17) RETROREFLECTIVE DELINEATORS, BOLTS, NUTS, WASHERS AND FIELD DRILLING OF POSTS, INCLUDING GALVANIZING TOUCH-UP, SHALL BE SUBSIDIARY TO ITEM 563.23. SEE STANDARD PLANS FOR ROAD AND BRIDGE CONSTRUCTION (DL-1) FOR ADDITIONAL DETAILS AND SPACING.

(18) THIS BRIDGE RAIL SYSTEM WAS SUCCESSFULLY CRASH TESTED FOR AASHTO PL2 IN 1997 BY THE NEW ENGLAND TRANSPORTATION CONSORTIUM.

SPLICE BAR DIMENSION TABLE

	T	A	B	C	D	X	L
	INTERIOR	2 1/2″	4″	4″	2″	3/4″	1′-8″
**	≤ 3 1/4″	2 1/2″	4″	4″	2″	2″	1′-8″
**	3 1/4″ < T ≤ 5 1/4″	3 1/2″	5″	5″	2 1/2″	3″	2′-1″

T = TOTAL MOVEMENT OF BRIDGE
** = END SPLICE BAR

SUBDIRECTORY	.DGN LOCATOR	SHEET SCALE
BRC/MiscShts	15882T3_BR-RAIL	AS NOTED

STATE OF NEW HAMPSHIRE
DEPARTMENT OF TRANSPORTATION * BUREAU OF BRIDGE DESIGN

TOWN PLYMOUTH BRIDGE NO. 117\143 STATE PROJECT 15882
LOCATION N.H. ROUTE 25 & N.H. ROUTE 3A over BAKER RIVER

T3 STEEL BRIDGE RAIL (PL2)

REVISIONS AFTER PROPOSAL	BY	DATE		BY	DATE
DESIGNED	NETC/JSZ	3/02	CHECKED	NHDOT	
DRAWN	PJP	10/05	CHECKED	JSZ	10/05
QUANTITIES	DDT	08/10	CHECKED	MGL	08/10
ISSUE DATE	11/15/05	FEDERAL PROJECT NO.		SHEET NO.	
REV. DATE	12/12/08	----------		19	

BRIDGE SHEET 15 OF 19
FILE NUMBER 115-4-3
TOTAL SHEETS 29

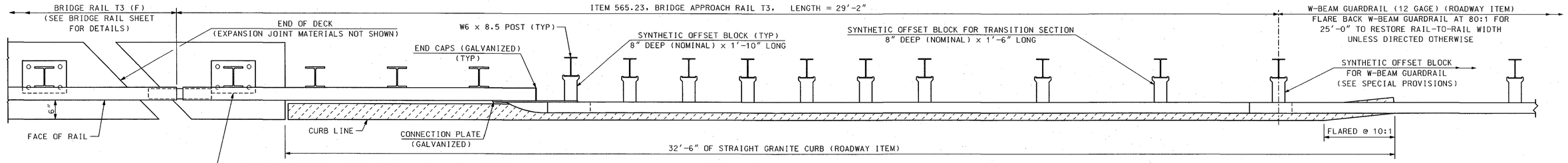

PROVIDE BRIDGE RAIL POST ASSEMBLY AT ABUTMENT CORNERS
(TYPICAL ABUTMENT B ONLY WITH ALL COSTS INCLUDED IN ITEM 565.23)
(SEE BRIDGE SHEET 15 FOR DETAILS)

PLAN VIEW – APPROACH RAIL

SCALE: 3/4" = 1'-0"

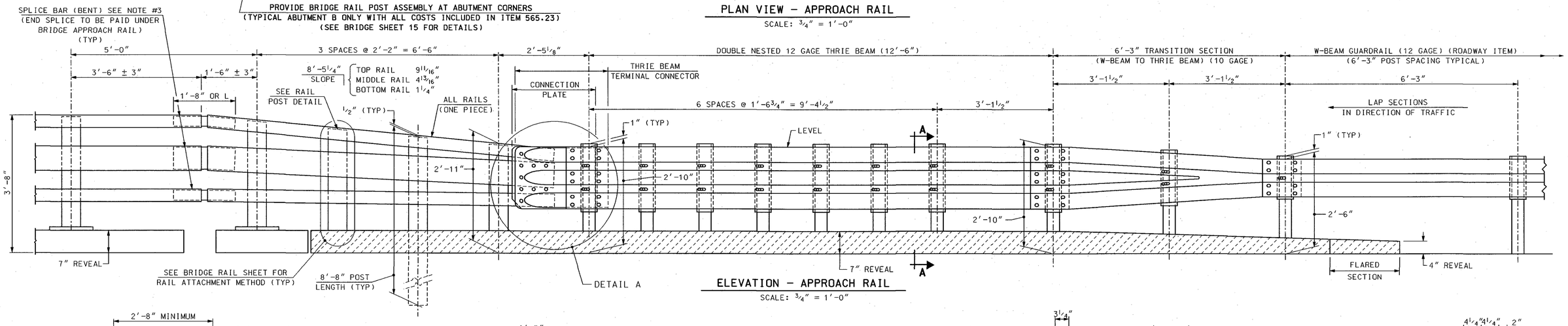

ELEVATION – APPROACH RAIL

SCALE: 3/4" = 1'-0"

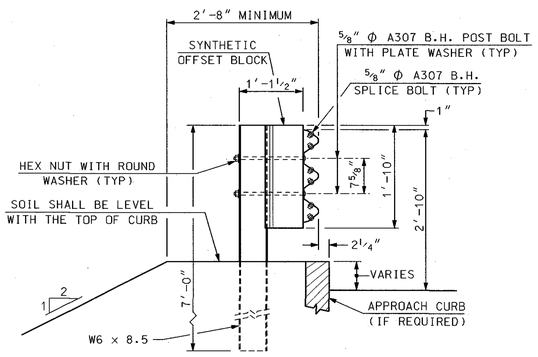

SECTION A-A (POST RAIL ASSEMBLY)

SCALE: 3/4" = 1'-0"

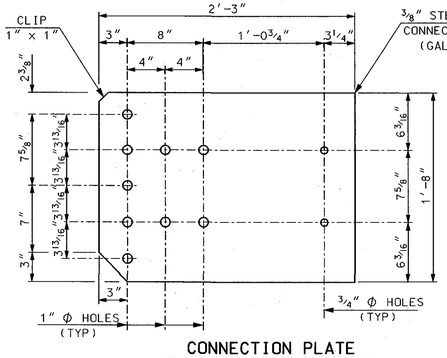

CONNECTION PLATE

SCALE: 1 1/2" = 1'-0"

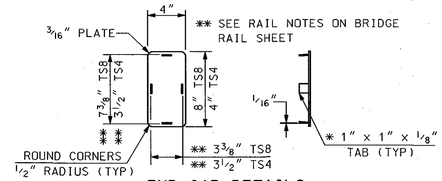

END CAP DETAILS

SCALE: 1 1/2" = 1'-0"

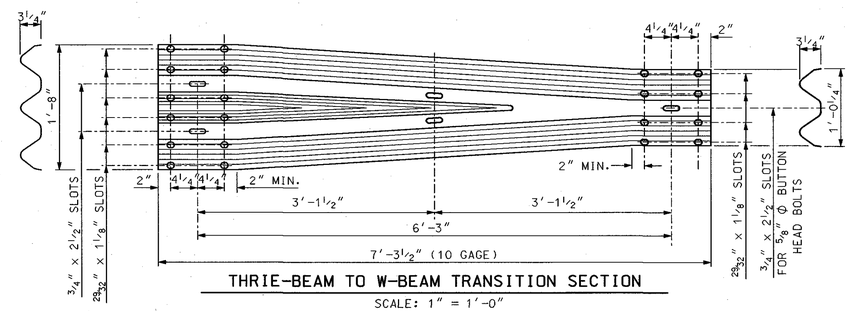

THRIE-BEAM TO W-BEAM TRANSITION SECTION

SCALE: 1" = 1'-0"

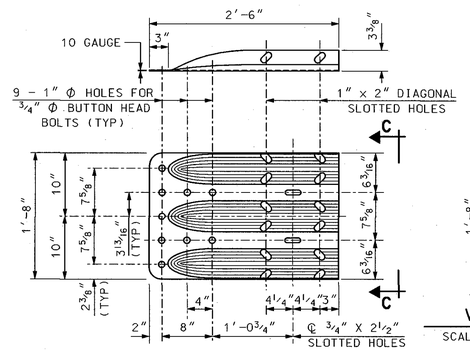

THRIE-BEAM TERMINAL CONNECTOR

SCALE: 1" = 1'-0"

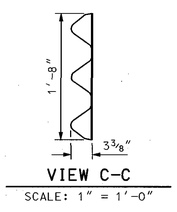

VIEW C-C

SCALE: 1" = 1'-0"

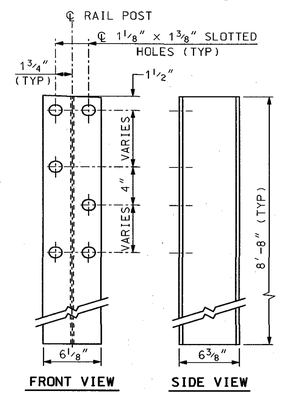

RAIL POST (W6 x 25)

SCALE: 1 1/2" = 1'-0"

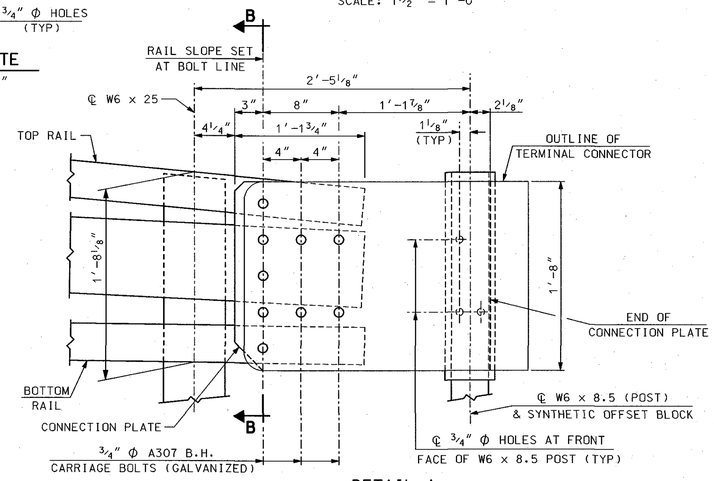

DETAIL A

OVERLAPPING OF DOUBLE NESTED THRIE-BEAM NOT SHOWN FOR CLARITY

SCALE: 1 1/2" = 1'-0"

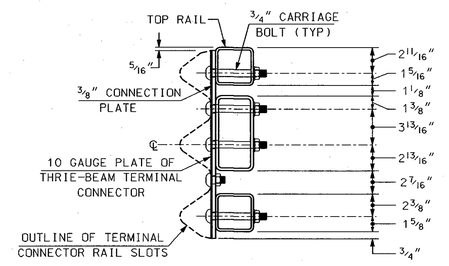

SECTION B-B (CONNECTION PLATE)

SCALE: 1 1/2" = 1'-0"

NOTES:

(1) ALL BRIDGE APPROACH RAIL MATERIALS, DIMENSIONS, SIZES, AND NOTES SHALL BE THE SAME AS THOSE OF THE BRIDGE RAIL, UNLESS OTHERWISE NOTED. SEE BRIDGE RAIL SHEET FOR NOTES AND ADDITIONAL INFORMATION.

(2) CARRIAGE BOLTS SHALL BE ASTM A307, AND NUTS SHALL BE ASTM A563 GRADE A OR BETTER (GALVANIZED).

(3) WELD SPLICE BAR TO FIT BEND. USE COMPLETE JOINT PENETRATION BUTT WELD (B-U2).

(4) THIS BRIDGE RAIL TRANSITION SYSTEM HAS BEEN ACCEPTED FOR NCHRP 350 TL3 BASED ON CRASH TESTING APRIL 2005 BY THE NEW ENGLAND TRANSPORTATION CONSORTIUM.

SUBDIRECTORY	.DGN LOCATOR	SHEET SCALE
BRC/MiscSlts	15882T3SP-APPR_A	AS NOTED

STATE OF NEW HAMPSHIRE
DEPARTMENT OF TRANSPORTATION * BUREAU OF BRIDGE DESIGN

TOWN PLYMOUTH BRIDGE NO. 117/143 STATE PROJECT 15882

LOCATION N.H. ROUTE 25 & N.H. ROUTE 3A over BAKER RIVER

T3 STEEL BRIDGE APPROACH RAIL (ABUTMENT A)

REVISIONS AFTER PROPOSAL	BY	DATE	BY	DATE
DESIGNED NETC/JSZ	3/02	CHECKED NHDOT		
DRAWN PJP	10/05	CHECKED JSZ	10/05	
QUANTITIES DDT	08/10	CHECKED MGL	08/10	
ISSUE DATE 11/15/05	FEDERAL PROJECT NO.	SHEET NO.		
REV. DATE 12/15/09	----------	20		

BRIDGE SHEET 16 OF 19
FILE NUMBER 115-4-3
TOTAL SHEETS 29

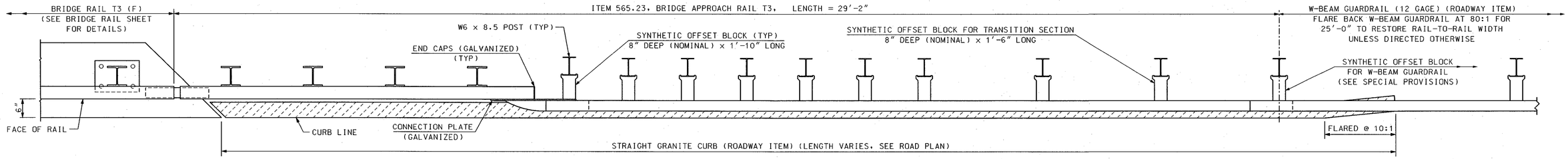

PLAN VIEW – APPROACH RAIL

SCALE: 3/4" = 1'-0"

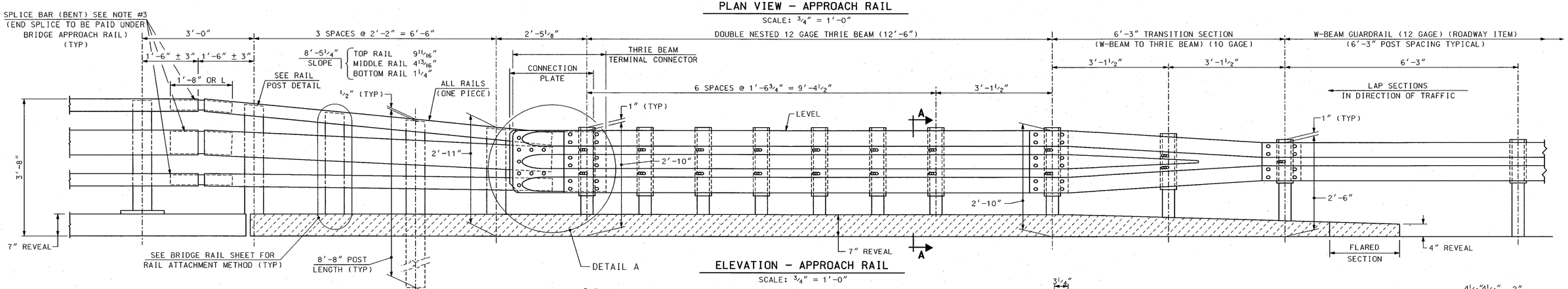

ELEVATION – APPROACH RAIL

SCALE: 3/4" = 1'-0"

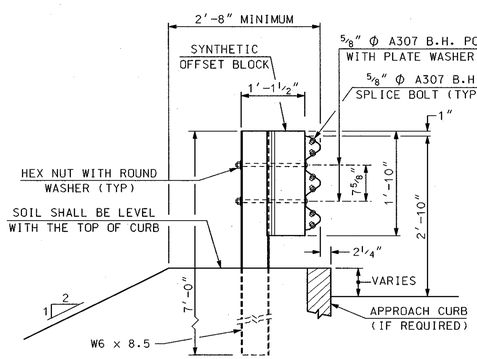

SECTION A-A (POST RAIL ASSEMBLY)

SCALE: 3/4" = 1'-0"

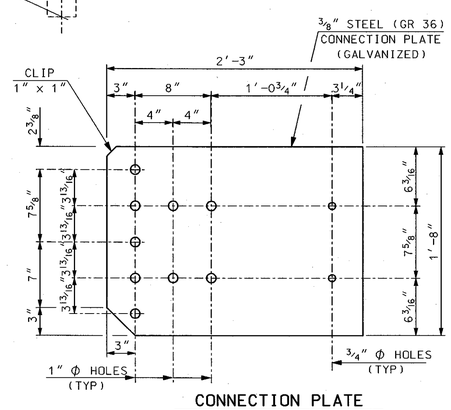

CONNECTION PLATE

SCALE: 1 1/2" = 1'-0"

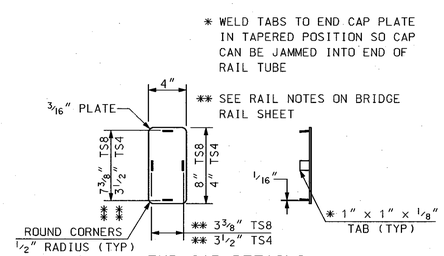

END CAP DETAILS

SCALE: 1 1/2" = 1'-0"

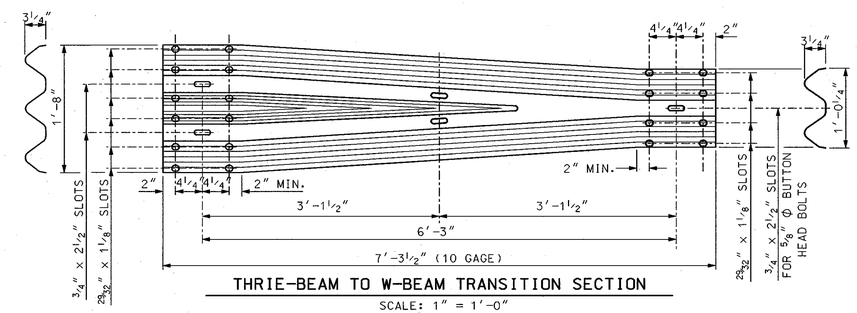

THRIE-BEAM TO W-BEAM TRANSITION SECTION

SCALE: 1" = 1'-0"

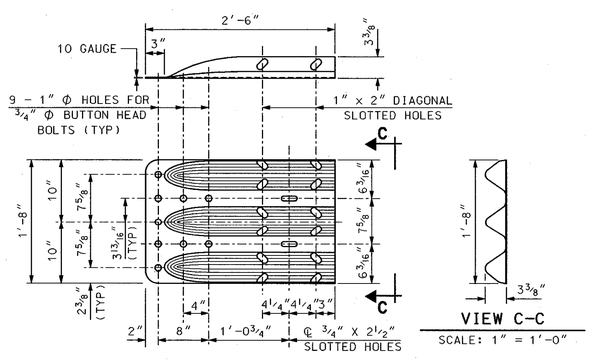

THRIE-BEAM TERMINAL CONNECTOR

SCALE: 1" = 1'-0"

VIEW C-C

SCALE: 1" = 1'-0"

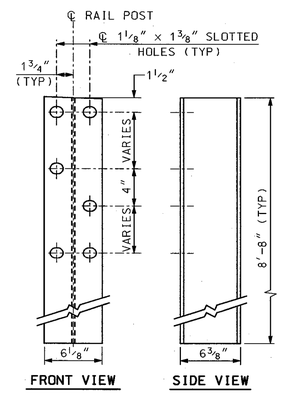

RAIL POST (W6 x 25)

SCALE: 1 1/2" = 1'-0"

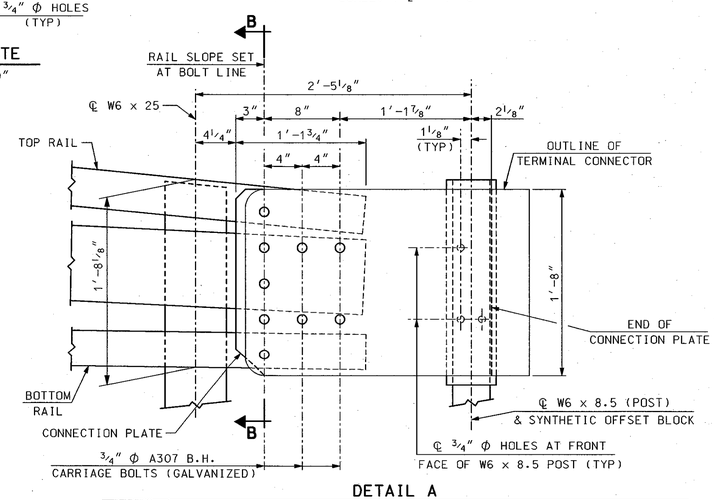

DETAIL A

OVERLAPPING OF DOUBLE NESTED THRIE-BEAM NOT SHOWN FOR CLARITY

SCALE: 1 1/2" = 1'-0"

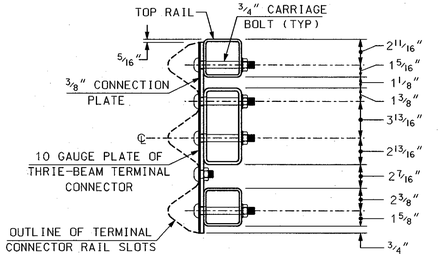

SECTION B-B (CONNECTION PLATE)

SCALE: 1 1/2" = 1'-0"

NOTES:

(1) ALL BRIDGE APPROACH RAIL MATERIALS, DIMENSIONS, SIZES, AND NOTES SHALL BE THE SAME AS THOSE OF THE BRIDGE RAIL, UNLESS OTHERWISE NOTED. SEE BRIDGE RAIL SHEET FOR NOTES AND ADDITIONAL INFORMATION.

(2) CARRIAGE BOLTS SHALL BE ASTM A307, AND NUTS SHALL BE ASTM A563 GRADE A OR BETTER (GALVANIZED).

(3) WELD SPLICE BAR TO FIT BEND. USE COMPLETE JOINT PENETRATION BUTT WELD (B-U2).

(4) THIS BRIDGE RAIL TRANSITION SYSTEM HAS BEEN ACCEPTED FOR NCHRP 350 TL3 BASED ON CRASH TESTING APRIL 2005 BY THE NEW ENGLAND TRANSPORTATION CONSORTIUM.

SUBDIRECTORY	.DGN LOCATOR	SHEET SCALE
BRC/MiscShts	15882T3SP-APPR_B	AS NOTED

STATE OF NEW HAMPSHIRE

DEPARTMENT OF TRANSPORTATION * BUREAU OF BRIDGE DESIGN

TOWN PLYMOUTH BRIDGE NO. 117\143 STATE PROJECT 15882

LOCATION N.H. ROUTE 25 & N.H. ROUTE 3A over BAKER RIVER

T3 STEEL BRIDGE APPROACH RAIL (ABUTMENT B)

REVISIONS AFTER PROPOSAL	BY	DATE		BY	DATE
DESIGNED	NETC/JSZ	3/02	CHECKED	NHDOT	
DRAWN	PJP	10/05	CHECKED	JSZ	10/05
QUANTITIES	DDT	08/10	CHECKED	MGL	08/10
ISSUE DATE	11/15/05	FEDERAL PROJECT NO.		SHEET NO.	
REV. DATE	12/15/09	----------		21	

BRIDGE SHEET 17 OF 19

FILE NUMBER 115-4-3

TOTAL SHEETS 29

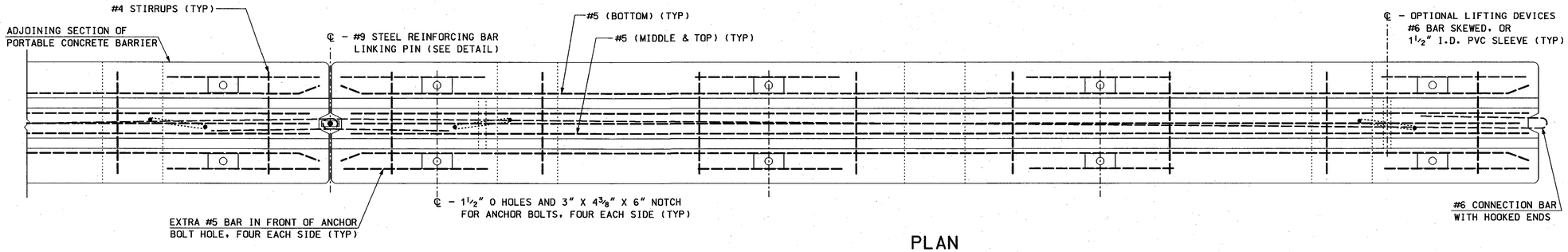

PLAN

SCALE: 1" = 1'-0"

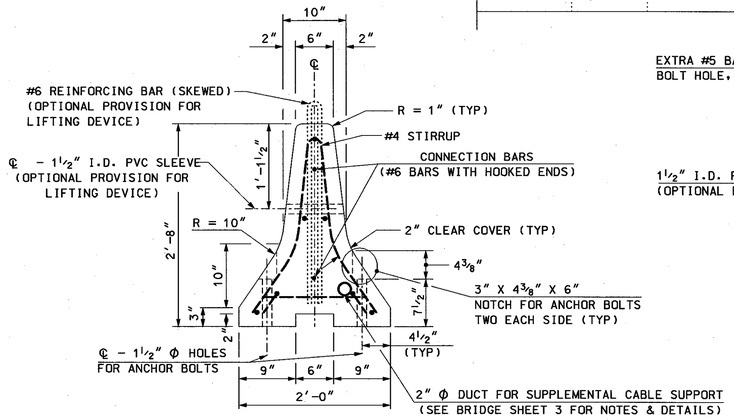

TYPICAL SECTION

SCALE: 1"= 1'-0"

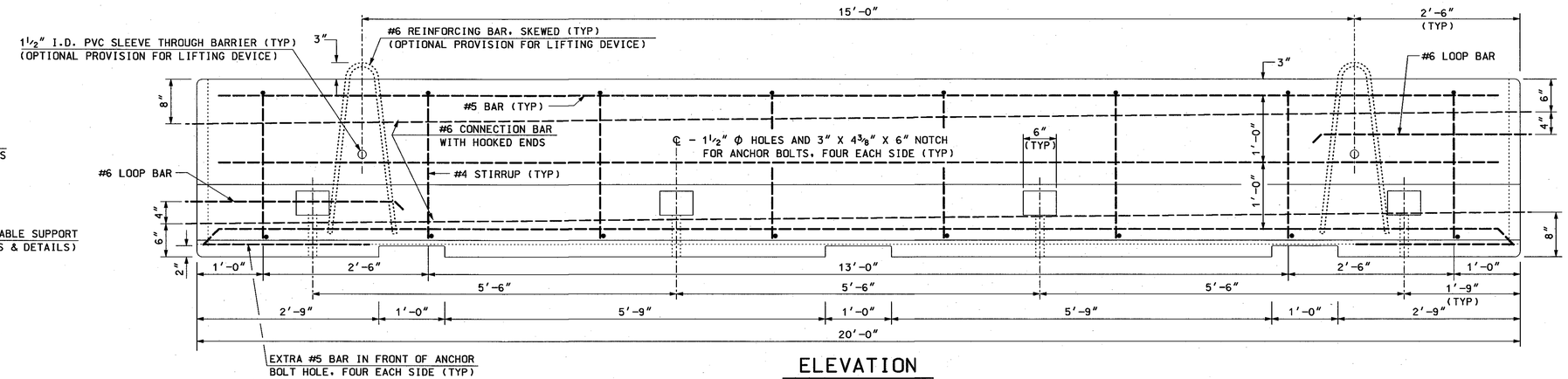

ELEVATION

SCALE:1" = 1'-0"

GENERAL NOTES

1. THE PORTABLE CONCRETE BARRIER DETAILS, AS SHOWN ON THIS SHEET, ARE IN COMPLIANCE WITH THE REQUIREMENTS OF NCHRP REPORT 350.
2. CONCRETE BARRIER SHALL BE FURNISHED BY THE CONTRACTOR AND PAID FOR UNDER THE APPROPRIATE ITEM(S) AS NOTED AND OUTLINED IN THE PLANS (SEE BRIDGE SHEET 3). END TREATMENTS AND CONNECTIONS TO EXISTING BARRIERS, WHEN REQUIRED, SHALL BE SUBSIDIARY TO THE BARRIER ITEM TO WHICH IT IS ATTACHED.
3. THE CONTRACTOR SHALL FURNISH AND INSTALL APPROVED RETROREFLECTIVE DELINEATORS AT 25-FOOT INTERVALS ALONG THE TOP AND/OR ONE FOOT DOWN THE SIDE OF THE PORTABLE CONCRETE BARRIER, SUBSIDIARY TO ITEM 606.417X. THE COLOR OF DELINEATORS SHALL, IN ALL CASES, CONFORM TO THE COLOR OF EDGE LINE MARKINGS. DELINEATORS SUPPLEMENT, BUT DO NOT REPLACE, THE NEED FOR RETROREFLECTIVE SOLID EDGE LINE MARKINGS.
4. UNPROTECTED OPENINGS IN PORTABLE CONCRETE BARRIER WILL NOT BE PERMITTED, UNLESS SPECIFICALLY AUTHORIZED BY THE ENGINEER.
5. OTHER BARRIER CONFIGURATIONS AND END CONNECTIONS ARE SUBJECT TO APPROVAL BY THE ENGINEER. BARRIERS OF DIFFERENT GEOMETRIC SHAPES SHALL NOT BE MIXED ON THE SAME RUN.
6. PLACE RETROREFLECTORIZED DRUMS OR BARRICADES IN ACCORDANCE WITH 6C-2 OF THE MUTCD IN ADVANCE OF PORTABLE CONCRETE BARRIER TO WARN AND ALERT DRIVERS.

MATERIAL NOTES

1. BARRIERS SHALL BE LIGHT COLORED CLASS "AA" CONCRETE HAVING A MINIMUM 28 DAY COMPRESSION STRENGTH OF 4,000 PSI. BARRIERS SHALL HAVE A SMOOTH UNIFORM SURFACE FREE OF DEFECTS AND IRREGULARITIES. CASTING DATE SHALL BE SHOWN ON BARRIER. ALL EXPOSED EDGES OF CONCRETE SHALL BE CHAMFERED ¾" UNLESS OTHERWISE NOTED.
2. ALL REINFORCING STEEL SHALL BE AASHTO M31 (ASTM-A615) GRADE 60. REINFORCEMENT SHOWN IS THE MINIMUM REQUIRED.
3. EACH BARRIER UNIT SHALL INCLUDE ONE LINKING PIN.
4. LIFTING OPTIONS SHOWN ARE ADVISORY ONLY. IT SHALL BE THE CONTRACTORS' RESPONSIBILITY TO PROVIDE ADEQUATE LIFTING POINTS ON EACH BARRIER.
5. CONNECTING DEVICES SHALL BE COMPATIBLE WITH OTHER UNITS AND SHALL ALLOW PLACEMENT ON A 110' RADIUS. BARRIERS OF DIFFERING GEOMETRIC SHAPES SHALL NOT BE MIXED.
6. DELINEATORS SHALL BE ATTACHED TO THE BARRIER USING AN APPROVED ADHESIVE MATERIAL OR BY BOLTS AND ANCHORS AS SHOWN ON STANDARD NO. DL-1.

PORTABLE CONCRETE BARRIER REINFORCING SCHEDULE

DESCRIPTION	SIZE	NO.	UNBENT LENGTH	TYPE
CONNECTION BARS	#6	2	24'-9½"	
BOTTOM LONGITUDINAL	#5	2	19'-10"	
CENTER & TOP LONGITUDINAL	#5	3	19'-4"	
BOTTOM TRANSVERSE	#5	8	1'-4"	
STIRRUPS	#4	8	5'-0"	
EXTRA ANCHOR HOLE BARS	#5	8	2'-5"	
LIFTING DEVICE (OPTIONAL)	#6	2	5'-4"	
LOOP BAR	#6	2	6'-10¼"	

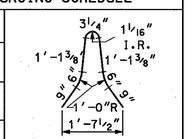

#4 STIRRUP BARS

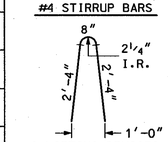

#6 LIFTING DEVICES (OPTIONAL)

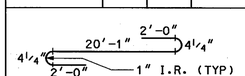

#6 CONNECTION BARS

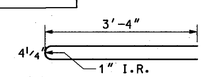

#6 LOOP BAR (TOP VIEW)

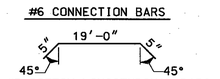

#5 BOTTOM LONGITUDINAL BARS

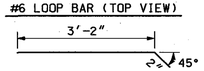

#6 LOOP BAR (SIDE VIEW)

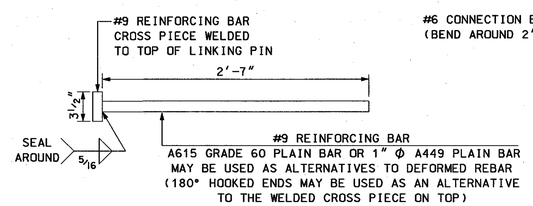

LINKING PIN

SCALE: 1" = 1'-0"

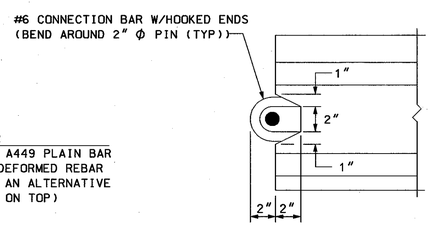

END NOTCH DETAIL

SCALE: 2" = 1'-0"

SUBDIRECTORY	.DGN LOCATOR	SHEET SCALE
BRC/MiscShts	15882PCB4-3LP20_PT	AS NOTED

STATE OF NEW HAMPSHIRE
DEPARTMENT OF TRANSPORTATION * BUREAU OF BRIDGE DESIGN

TOWN PLYMOUTH BRIDGE NO. 117\143 STATE PROJECT 15882

LOCATION N.H. ROUTE 25 & N.H. ROUTE 3A over BAKER RIVER

PORTABLE CONCRETE BARRIER

BRIDGE SHEET 18 OF 19

REVISIONS AFTER PROPOSAL	BY	DATE		BY	DATE
DESIGNED	NHDOT	9/02	CHECKED	NHDOT	11/02
DRAWN	PJP/GMC	9/02	CHECKED	NHDOT	11/02
QUANTITIES			CHECKED		

ISSUE DATE	-----	FEDERAL PROJECT NO.	SHEET NO.	TOTAL SHEETS
REV. DATE	7/1/04	----------	22	29

FILE NUMBER 115-4-3

ABUTMENT A — BRIDGE SHEET 5

Mark	Size	Length	# Pieces	Type	A	B	C	D	E	F	G	H	J	K	R	O
A1	#5	24.50	3	—												EPOXY
A2	#5	2.00	6	C1												EPOXY
A3	#5	2.00	6	C2												EPOXY
A4	#5	19.08	3	—												EPOXY
A5	#5	24.25	3	—												EPOXY
A6	#5	2.83	70	17	1.00	0.83	1.00									EPOXY
A7	#5	4.75	28	17	1.58	1.58	1.58									EPOXY
A8	#5	3.75	6	—												EPOXY
A9	#5	3.00	4	—												EPOXY
A10	#5	2.25	6	—												EPOXY

SECTION SUMMARY TOTAL WEIGHT (lbs):

ITEM #	DESCRIPTION	#3	#4	#5	#6	#7	#8	#9	#10	#11	#14	#18	TOTAL
544	REINFORCING STEEL	0	0	0	0	0	0	0	0	0	0	0	0
544.11	MECH. CONNECTOR	0	0	0	0	0	0	0	0	0	0	0	0
544.2	EPOXY COATED	0	0	608	0	0	0	0	0	0	0	0	608
544.21	EPOXY MECH. CON.	0	0	25	0	0	0	0	0	0	0	0	25

ABUTMENT B STUBWALL — BRIDGE SHEET 6

Mark	Size	Length	# Pieces	Type	A	B	C	D	E	F	G	H	J	K	R	O
B1	#5	2.00	124	—												EPOXY
B2	#5	3.92	60	—		1.42	1.08	1.42								EPOXY
B3	#5	4.33	2	—		1.42	1.50	1.42								EPOXY
B4	#5	20.25	6	—												EPOXY
B5	#5	2.00	12	C1												EPOXY
B6	#5	2.00	12	C2												EPOXY
B7	#5	20.83	6	—												EPOXY
B8	#5	18.67	6	—												EPOXY

SECTION SUMMARY TOTAL WEIGHT (lbs):

ITEM #	DESCRIPTION	#3	#4	#5	#6	#7	#8	#9	#10	#11	#14	#18	TOTAL
544	REINFORCING STEEL	0	0	0	0	0	0	0	0	0	0	0	0
544.11	MECH. CONNECTOR	0	0	0	0	0	0	0	0	0	0	0	0
544.2	EPOXY COATED	0	0	887	0	0	0	0	0	0	0	0	887
544.21	EPOXY MECH. CON.	0	0	50	0	0	0	0	0	0	0	0	50

DECK — BRIDGE SHEET 11

Mark	Size	Length	# Pieces	Type	A	B	C	D	E	F	G	H	J	K	R	O
D1	#5	44.42	684	—												EPOXY
D2	#5	40.00	104	—												EPOXY
D3	#5	2.83	2016	C1												EPOXY
D4	#5	2.83	2016	C2												EPOXY
D5	#5	5.88	36	N2		0.83	1.17	1.92	1.97			1.14		1.61		EPOXY
D6	#5	8.00	18	—												EPOXY
D7	#5	2.83	76	17		0.83	1.17	0.83								EPOXY
D8	#5	23.67	14	—												EPOXY
D9	#5	5.75	712	S5	0.83	1.33	1.42	1.33			0.83					EPOXY
D10	#5	1.08	8	—												EPOXY
D11	#5	1.58	8	—												EPOXY
D12	#5	2.08	8	—												EPOXY
D13	#5	2.58	8	—												EPOXY
D14	#5	3.08	8	—												EPOXY
D15	#5	3.58	8	—												EPOXY
D16	#5	4.08	8	—												EPOXY
D17	#5	4.58	8	—												EPOXY
D18	#5	5.08	8	—												EPOXY
D19	#5	5.58	8	—												EPOXY
D20	#5	6.08	8	—												EPOXY
D21	#5	6.58	8	—												EPOXY
D22	#5	7.08	8	—												EPOXY
D23	#5	7.58	8	—												EPOXY
D24	#5	8.08	8	—												EPOXY
D25	#5	8.58	8	—												EPOXY
D26	#5	9.08	8	—												EPOXY
D27	#5	9.58	8	—												EPOXY
D28	#5	10.08	8	—												EPOXY
D29	#5	10.58	8	—												EPOXY
D30	#5	11.08	8	—												EPOXY
D31	#5	11.58	8	—												EPOXY
D32	#5	12.08	8	—												EPOXY
D33	#5	13.08	8	—												EPOXY
D34	#5	13.58	8	—												EPOXY
D35	#5	13.58	8	—												EPOXY
D36	#5	14.08	8	—												EPOXY
D37	#5	14.58	4	—												EPOXY
D38	#5	15.08	4	—												EPOXY
D39	#5	15.58	4	—												EPOXY
D40	#5	16.08	4	—												EPOXY
D41	#5	16.58	4	—												EPOXY
D42	#5	16.67	1904	—												EPOXY
D43	#5	16.25	4	—												EPOXY
D44	#5	15.75	4	—												EPOXY
D45	#5	15.25	4	—												EPOXY
D46	#5	14.75	4	—												EPOXY
D47	#5	14.25	4	—												EPOXY
D48	#5	13.75	4	—												EPOXY
D49	#5	13.25	4	—												EPOXY
D50	#5	12.75	4	—												EPOXY
D51	#5	12.25	4	—												EPOXY
D52	#5	11.75	4	—												EPOXY
D53	#5	11.25	4	—												EPOXY
D54	#5	10.75	4	—												EPOXY
D55	#5	10.25	4	—												EPOXY
D56	#5	9.75	4	—												EPOXY
D57	#5	9.25	4	—												EPOXY
D58	#5	8.75	4	—												EPOXY
D59	#5	8.25	4	—												EPOXY
D60	#5	7.75	4	—												EPOXY
D61	#5	7.25	4	—												EPOXY
D62	#5	6.75	4	—												EPOXY
D63	#5	6.25	4	—												EPOXY
D64	#5	5.75	4	—												EPOXY
D65	#5	5.25	4	—												EPOXY
D66	#5	4.75	4	—												EPOXY
D67	#5	4.25	4	—												EPOXY
D68	#5	3.75	4	—												EPOXY
D69	#5	3.25	4	—												EPOXY
D70	#5	2.75	4	—												EPOXY
D71	#5	2.25	4	—												EPOXY
D72	#5	1.75	4	—												EPOXY
D73	#5	1.25	4	—												EPOXY
D74	#5	14.50	962	—												EPOXY
D75	#5	3.33	32	17		1.00	1.33	1.00								EPOXY
D76	#5	20.50	10	—												EPOXY

SECTION SUMMARY TOTAL WEIGHT (lbs):

ITEM #	DESCRIPTION	#3	#4	#5	#6	#7	#8	#9	#10	#11	#14	#18	TOTAL
544	REINFORCING STEEL	0	0	0	0	0	0	0	0	0	0	0	0
544.11	MECH. CONNECTOR	0	0	0	0	0	0	0	0	0	0	0	0
544.2	EPOXY COATED	0	0	92375	0	0	0	0	0	0	0	0	92375
544.21	EPOXY MECH. CON.	0	0	11915	0	0	0	0	0	0	0	0	11915

GRAND SUMMARY TOTAL WEIGHT (lbs):

ITEM #	DESCRIPTION	#3	#4	#5	#6	#7	#8	#9	#10	#11	#14	#18	TOTAL
544	REINFORCING STEEL	0	0	0	0	0	0	0	0	0	0	0	0
544.11	MECH. CONNECTOR	0	0	0	0	0	0	0	0	0	0	0	0
544.2	EPOXY COATED	0	0	93870	0	0	0	0	0	0	0	0	93870
544.21	EPOXY MECH. CON.	0	0	11990	0	0	0	0	0	0	0	0	11990

STANDARD INDUSTRY BENDS, STIRRUPS, & TIES

RECOMMENDED END HOOKS — ALL GRADES (in.)

BAR SIZE	180° HOOKS D(②)	180° HOOKS A or G	180° HOOKS J	90° HOOKS A or G
#3	2 1/4	5	3	6
#4	3	6	4	8
#5	3 3/4	7	5	10
#6	4 1/2	8	6	12
#7	5 1/4	10	7	14
#8	6	11	8	16
#9	9 1/2	15	11 3/4	19
#10	10 3/4	17	13 1/4	22
#11	12	19	14 3/4	24
#14	18 1/4	27	21 3/4	31

STIRRUP & TIE HOOK DIMENSIONS — GRADES 40-50-60 ksi

BAR SIZE	D(②) (in.)	90° HOOKS A or G	135° HOOKS A or G	135° HOOKS H(appr)
#3	1 1/2	4	4	2 1/2
#4	2	4 1/2	4 1/2	3
#5	2 1/2	6	5 1/2	3 3/4
#6	4 1/2	12	7 3/4	4 1/4
#7	5 1/4	14	9	5 1/4
#8	6	16	10 1/4	6

NOTE: D = finished inside bend d of hook.
See 1997 CRSI Manual p6-3&4.
For additional data on standard bar bends not shown on this sheet see 1997 CRSI Manual p6-3&4.

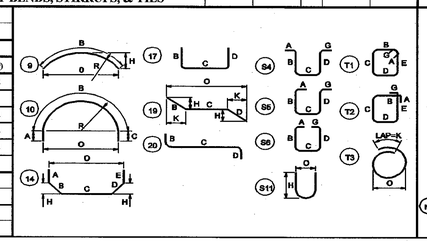

STANDARD N.H. & SPECIAL BENDS

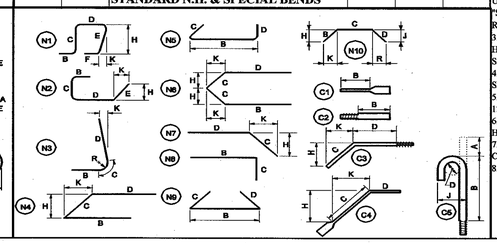

NOTES:
1. FIGURES IN CIRCLE SHOW TYPE OF BEND.
2. UNLESS OTHERWISE DESIGNATED, ALL BAR REINFORCEMENT FOR CONCRETE IN SIZES UP TO AND INCLUDING NO. 18 SHALL CONFORM TO THE REQUIREMENTS OF THE "SPECIFICATIONS FOR DEFORMED BILLET - STEEL BARS FOR CONCRETE REINFORCEMENT", AASHTO M 31-94 (ASTM A615).
3. FOR TYPICAL BENDING DETAILS, RECOMMENDED PIN DIAMETER "D" OF BENDS AND HOOKS AND OTHER STANDARD PRACTICE SEE CURRENT (1990) CONCRETE REINFORCING STEEL INSTITUTE "MANUAL OF STANDARD PRACTICE", P. 6-4.
4. BARS WHICH REQUIRE MORE ACCURATE BENDING THAN STANDARD PRACTICES SHOULD HAVE LIMITS INDICATED.
5. ALL DIMENSIONS ARE OUT TO OUT OF BAR EXCEPT "A" AND "G" ON STANDARD 180° AND 135° HOOKS.
6. "J" DIMENSION ON 180 ° HOOKS TO BE SHOWN ONLY WHEN NECESSARY TO RESTRICT HOOK SIZE, OTHERWISE STANDARD HOOKS ARE TO BE USED.
7. "H" DIMENSION ON STIRRUPS TO BE SHOWN ONLY WHEN NECESSARY TO MAINTAIN CLEARANCES.
8. WHERE SLOPE DIFFERS FROM 45° DIMENSIONS "H" AND "K" MUST BE SHOWN.

▲ DENOTES BARS TO BE CUT IN FIELD, AS REQUIRED.
△ DENOTES BARS TO BE BENT IN FIELD.

ASTM STANDARD REINFORCING BARS

BAR DESIGNATION	WEIGHT LBS. PER FOOT	NOM. DIMEN. DIAM. in	NOM. DIMEN. CROSS SECT. AREA in²
#3	0.376	0.375	0.11
#4	0.668	0.500	0.20
#5	1.043	0.625	0.31
#6	1.502	0.750	0.44
#7	2.044	0.875	0.60
#8	2.670	1.000	0.79
#9	3.400	1.128	1.00
#10	4.303	1.270	1.27
#11	5.313	1.410	1.56
#14	7.650	1.693	2.25
#18	13.600	2.257	4.00

STATE OF NEW HAMPSHIRE
DEPARTMENT OF TRANSPORTATION BUREAU OF BRIDGE DESIGN

TOWN: PLYMOUTH — BRIDGE NO. 117/143 — STATE PROJECT 15882
LOCATION: NH ROUTE 25 & ROUTE 3A over BAKER RIVER
REINFORCING SCHEDULE (SHEET 1 OF 1)

	BY	DATE		BY	DATE	REVISIONS AFTER PROPOSAL
DESIGNED	DDT	07/10	CHECKED	MGL	08/10	
DRAWN	DDT	07/10	CHECKED	MGL	08/10	
TRACED			CHECKED			FEDERAL PROJECT NUMBER
QUANTITIES	DDT	07/10	CHECKED	MGL	08/10	——

LOCATIONS OF THE EXISTING DRIVEWAY & STRUCTURES
SHOWN IN THIS AREA ARE APPROXIMATE

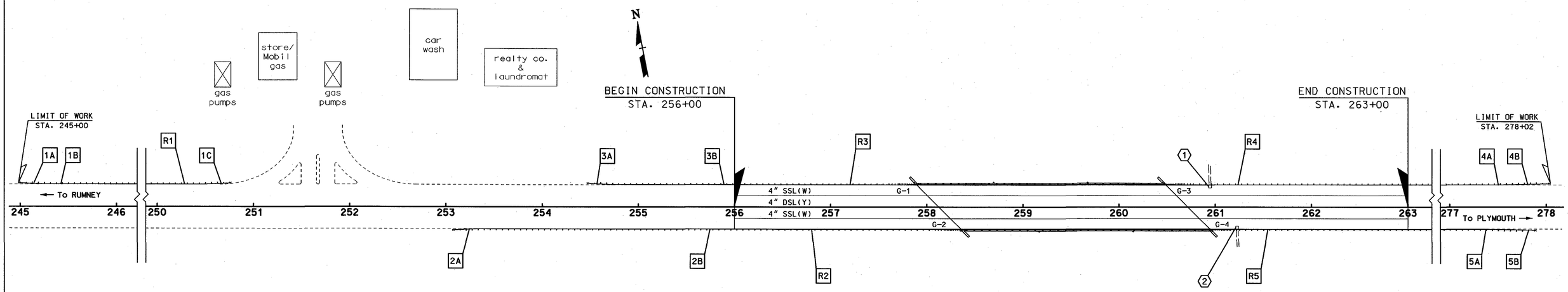

GENERAL ROADWAY CONSTRUCTION NOTES

(1) ITEM 621.2, RETROREFLECTIVE BEAM GUARDRAIL DELINEATOR (WHITE) AND, ITEM 621.31, SINGLE DELINEATOR WITH POST (WHITE) SHALL BE INSTALLED AS SHOWN ON NHDOT HIGHWAY STANDARD PLAN DL-1, OR AS DIRECTED BY THE CONTRACT ADMINISTRATOR.

(2) FINAL PAVEMENT MARKINGS (ITEM 632.0104) SHALL BE AS FOLLOWS:
FROM STA 256+00 TO STA 263+00
CENTERLINE = 4" DOUBLE SOLID LINE (YELLOW)
EDGE OF TRAVEL WAY, RT 12' = 4" SINGLE SOLID LINE (WHITE)
EDGE OF TRAVEL WAY, LT 12' = 4" SINGLE SOLID LINE (WHITE)

(3) DURING PHASE 2 CONSTRUCTION A TEMPORARY PAVEMENT FILLET, SIMILAR TO THAT SHOWN IN THE PAVEMENT MATCH DETAIL, SHALL BE PLACED ON THE PHASE 1 ROADWAY BINDER COURSE AT BOTH ENDS OF THE NEW CONCRETE BRIDGE DECK. ALL COSTS SUBSIDIARY TO ITEM 403.11.

(4) ITEM 403.6, PAVEMENT JOINT ADHESIVE SHALL BE APPLIED TO ALL EXPOSED LONGITUDINAL JOINTS PRIOR TO PAVING EACH WEARING COURSE PASS INCLUDING WEARING COURSE JOINTS ACROSS THE BRIDGE DECK. PAVEMENT JOINT ADHESIVE SHALL ALSO BE APPLIED AT THE PAVEMENT MATCH TRANSVERSE JOINTS PRIOR TO INSTALLING THE WEARING COURSE.

(5) ITEM 1008.11, ALTERATIONS AND ADDITIONS AS NEEDED - UNANTICIPATED WORK (AS DIRECTED BY THE CONTRACT ADMINISTRATOR) SHALL INCLUDE, BUT NOT BE LIMITED TO THE FOLLOWING:
- REPAIR OR REPLACEMENT OF DAMAGED SECTIONS OF EXISTING BITUMINOUS CURB WITHIN THE PROJECT LIMITS.
- REPAIR OF ERODED SLOPES AT CURB FAILURE LOCATIONS AND NONCURBED SECTIONS OF THE ROADWAY.
- REMOVAL AND DISPOSAL OF WOOD BACKER BOARDS (600'±) BEHIND EXISTING BITUMINOUS CURB ALONG NORTHEAST CABLE GUARDRAIL RUN.

GUARDRAIL REMOVAL NOTES

R1 STA. 245+14± LT - 250+60± LT (REMOVE EXISTING GUARDRAIL)
ITEM 202.7 = 546.0 LF

R2 STA. 253+32± RT - 258+35± RT (REMOVE EXISTING GUARDRAIL)
ITEM 202.7 = 503.0 LF

R3 STA. 254+83± LT - 257+90± LT (REMOVE EXISTING GUARDRAIL)
ITEM 202.7 = 307.0 LF

R4 STA. 260+50± LT - 277+46± LT (REMOVE EXISTING GUARDRAIL)
ITEM 202.7 = 1696.0 LF

R5 STA. 260+95± RT - 277+37± RT (REMOVE EXISTING GUARDRAIL)
ITEM 202.7 = 1642.0 LF

GUARDRAIL NOTES

1A ITEM 606.1455 - BEAM GUARDRAIL (TERM. UNIT EAGRT 25 FT.)
(ATTACH TO BEAM GUARDRAIL @ STA. 245+25 LT 22')

1B STA. 245+25 LT 22' + 250+50 LT 22'
ITEM 606.120 = 525.0 LF

1C ITEM 606.1455 - BEAM GUARDRAIL (TERM. UNIT EAGRT 25 FT.)
(ATTACH TO BEAM GUARDRAIL @ STA. 250+50 LT 22')

2A ITEM 606.1455 - BEAM GUARDRAIL (TERM. UNIT EAGRT 25 FT.)
(ATTACH TO BEAM GUARDRAIL @ STA. 253+33 RT 22')

2B STA. 253+33 RT 22' - 258+08 RT 22'± (ATTACH TO BR. APPROACH RAIL)
ITEM 606.120 = 475.0 LF

3A ITEM 606.1455 - BEAM GUARDRAIL (TERM. UNIT EAGRT 25 FT.)
(ATTACH TO BEAM GUARDRAIL @ STA. 254+73 LT 22')

3B STA. 254+73 LT 22' - 257+60.5 LT 22'± (ATTACH TO BR. APPROACH RAIL)
ITEM 606.120 = 287.5 LF

4A STA. 260+77 LT 22'± - 277+52 LT 22' (ATTACH TO BR. APPROACH RAIL)
ITEM 606.120 = 1675.0 LF

4B ITEM 606.1454 - BEAM GUARDRAIL (TERM. UNIT EAGRT 50 FT.)
(ATTACH TO BEAM GUARDRAIL @ STA. 277+52 LT 22')

5A STA. 261+25 RT 22'± - 277+37.5 RT 22' (ATTACH TO BR. APPROACH RAIL)
ITEM 606.120 = 1612.5 LF

5B ITEM 606.1454 - BEAM GUARDRAIL (TERM. UNIT EAGRT 50 FT.)
(ATTACH TO BEAM GUARDRAIL @ STA. 277+37.5 RT 22')

DRAINAGE NOTES

(1) STA. 260+94 LT 20'
RECONSTRUCT DI TOP & RESET GRATE (ITEM 604.4)
INSTALL POLYETHYLENE LINER (ITEM 604.0007)

(2) STA. 261+23 RT 20'
RECONSTRUCT DI TOP & RESET GRATE (ITEM 604.4)
INSTALL POLYETHYLENE LINER (ITEM 604.0007)

CURBING NOTES

(1) ITEM 202.6, CURB REMOVAL FOR STORAGE, SHALL INCLUDE THE REMOVAL OF EXISTING BRIDGE APPROACH CURB (25' EACH QUADRANT). SEE PROSECUTION OF WORK FOR SALVAGE OF MATERIALS.

(2) ITEM 609.01, STRAIGHT GRANITE CURB, SHALL BE PLACED ALONG THE FRONT OF PROPOSED BRIDGE APPROACH RAIL. SEE BRIDGE SHEETS 16 & 17 FOR DETAILS.
G-1 = 32.5 LF
G-2 = 32.5 LF
G-3 = 50 LF
G-4 = 32.5 LF

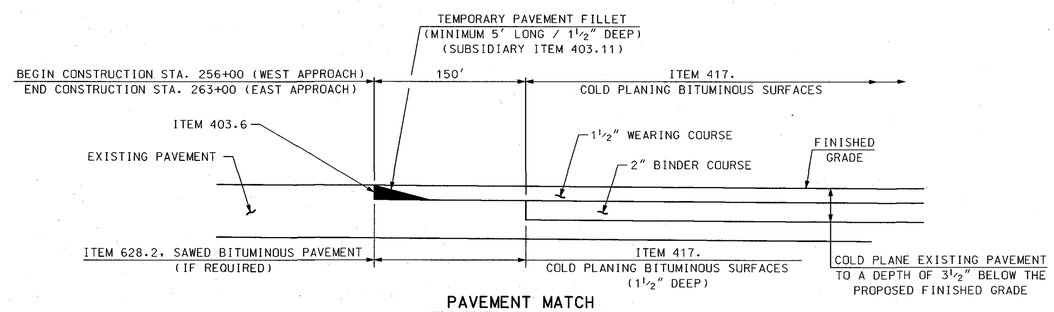

PAVEMENT MATCH
NOT TO SCALE

FILE NO. 115-4-3

STATE OF NEW HAMPSHIRE
DEPARTMENT OF TRANSPORTATION • BUREAU OF HIGHWAY DESIGN

ROADWAY PLAN

SHEET SCALE	SUBDIRECTORY	DGN	STATE PROJECT NO.	SHEET NO.	TOTAL SHEETS
1" = 50'	Prj/CutSheet	15882RDPLAN1	15882	24	29

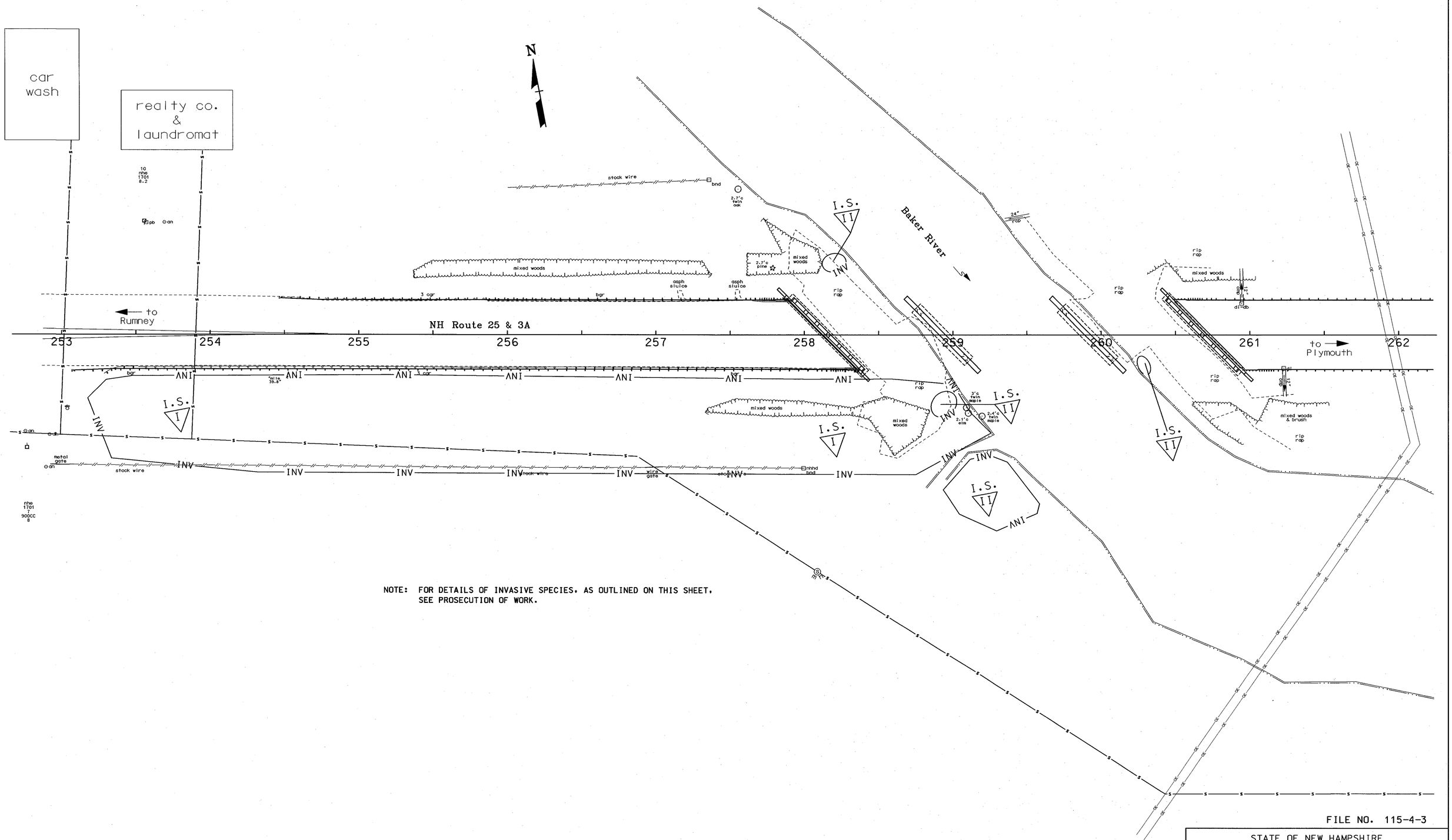

NOTE: FOR DETAILS OF INVASIVE SPECIES, AS OUTLINED ON THIS SHEET, SEE PROSECUTION OF WORK.

FILE NO. 115-4-3

STATE OF NEW HAMPSHIRE

DEPARTMENT OF TRANSPORTATION • BUREAU OF HIGHWAY DESIGN

ROADWAY PLAN
(INVASIVE SPECIES SITES)

SHEET SCALE	SUBDIRECTORY	DGN	STATE PROJECT NO.	SHEET NO.	TOTAL SHEETS
1" = 30'	Prj/CutSheet	15882RDPLAN2	15882	25	29

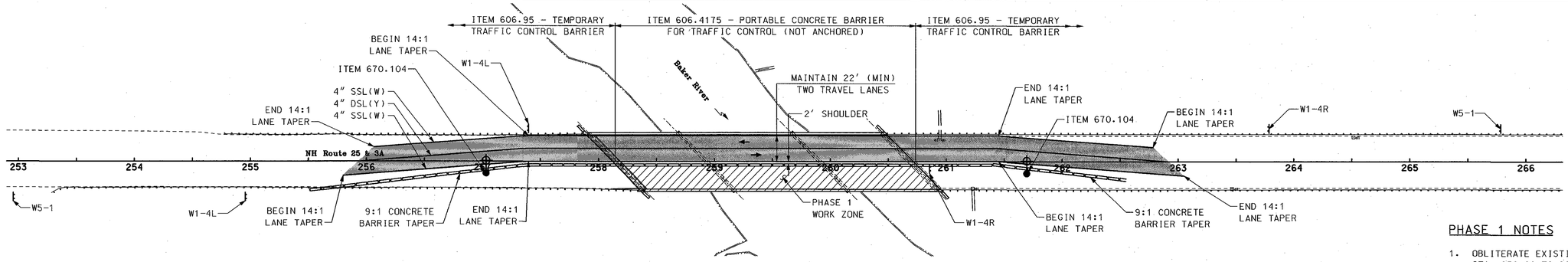

TRAFFIC CONTROL LAYOUT - PHASE 1

SCALE: 1" = 50'

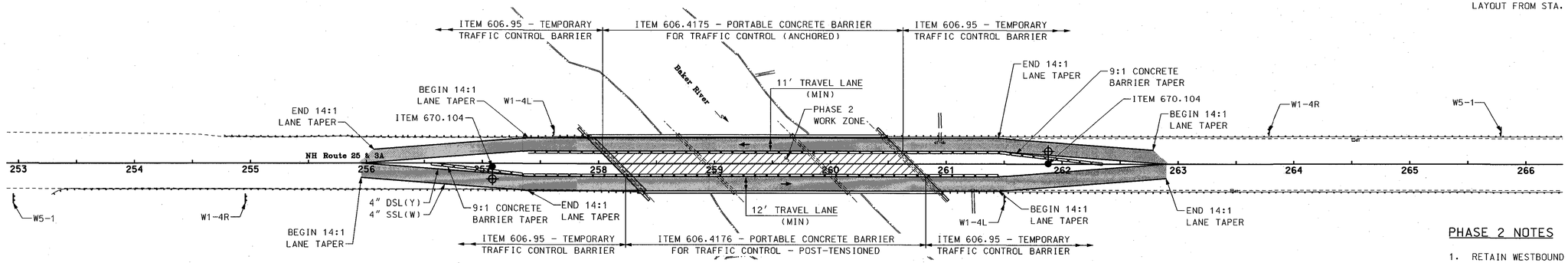

TRAFFIC CONTROL LAYOUT - PHASE 2

SCALE: 1" = 50'

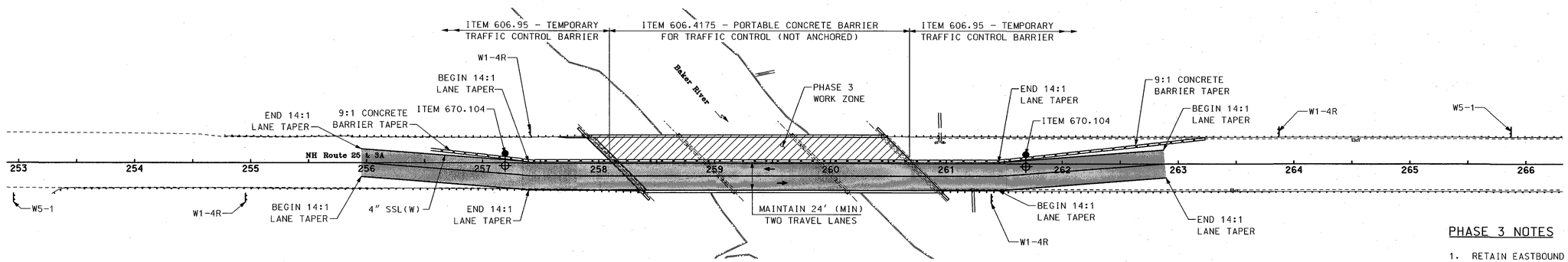

TRAFFIC CONTROL LAYOUT - PHASE 3

SCALE: 1" = 50'

PHASE 1 NOTES

1. OBLITERATE EXISTING PAVEMENT MARKINGS (ITEM 632.9104) FROM STA. 256+00 TO 263+00.
2. ITEM 632.1104, PREFORMED RETROREFLECTIVE TAPE, TYPE 1 (REMOVABLE) 4" LINE, SHALL BE INSTALLED AS SHOWN ON THE LAYOUT FROM STA. 256+00 TO 263+00.

PHASE 2 NOTES

1. RETAIN WESTBOUND LANE MARKINGS FROM PHASE 1.
2. ITEM 632.1104, PREFORMED RETROREFLECTIVE TAPE, TYPE 1 (REMOVABLE) 4" LINE, SHALL BE INSTALLED AS SHOWN ON THE LAYOUT FROM STA. 256+00 TO 263+00.

PHASE 3 NOTES

1. RETAIN EASTBOUND LANE MARKINGS FROM PHASE 2.
2. ITEM 632.1104, PREFORMED RETROREFLECTIVE TAPE MARKING, TYPE 1 (REMOVABLE) 4" LINE, SHALL BE INSTALLED AS SHOWN ON THE LAYOUT FROM STA. 256+00 TO 263+00.

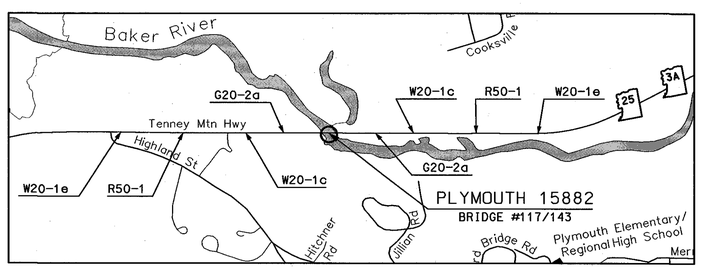

SIGN LAYOUT

SCALE: 1" = 1000'

PERMANENT CONSTRUCTION SIGNS AND WARNING DEVICES
(INCLUDED IN ITEM NO. 619.1)

SIGN NO.	DESCRIPTION	SIZE (ft)	S.F.	NO. REQ.	TOTAL AREA	POSTS	PORTABLE SIGN SUPPORTS	REMARKS
G20-2a	END ROAD WORK	2X4	8	2	16	4		
W1-4L	REVERSE CURVE LEFT	4X4	16	2	32	8		
W1-4R	REVERSE CURVE RIGHT	4X4	16	2	32	8		
W5-1	ROAD NARROWS	4X4	16	2	32	4		
W8-1	BUMP	4X4	16	2	32		2	
W8-2	DIP	4X4	16	2	32		2	
W20-1c	ROAD WORK 1000 FT	4X4	16	2	32	4		FLUORESCENT ORANGE
W20-1e	ROAD WORK 1/2 MILE	4X4	16	2	32	4		FLUORESCENT ORANGE
R50-1	NH LAW WORK ZONE	4X6	24	2	48	4		

The estimated quantities of "Permanent Controls" are hereby listed. The Contractor is responsible for all "Operational Controls" required under section 619 of the NHDOT Specifications and the Manual on Uniform Traffic Control Devices (MUTCD), Part VI.

GENERAL NOTES

1. SEE WORK ZONE TRAFFIC CONTROL STANDARD PLANS (TC-1, TC-2, & TC-3) FOR ADDITIONAL DETAILS.
2. TWO-WAY TRAFFIC SHALL BE MAINTAINED AT ALL TIMES DURING PHASED BRIDGE CONSTRUCTION.
3. SEE BRIDGE SHEET 3 FOR CROSS SECTIONS AND BARRIER DETAILS. ITEMS 606.4175 AND 606.4176 SHALL ONLY BE PLACED ON THE BRIDGE.
4. RETURN TRAFFIC TO NORMAL LANE USE BEYOND WORK AREA.
5. USE ITEM 670.104, TEMPORARY PORTABLE LIGHTING, AT BOTH BARRIER APPROACHES. SEE SPECIAL PROVISION FOR DETAILS.

FILE NO. 115-4-3

STATE OF NEW HAMPSHIRE

DEPARTMENT OF TRANSPORTATION ◦ BUREAU OF BRIDGE DESIGN

TRAFFIC CONTROL PLANS & CONSTRUCTION SIGNING

SHEET SCALE	SUBDIRECTORY	DGN	STATE PROJECT NO.	SHEET NO.	TOTAL SHEETS
AS NOTED	Cadd/Prj	15882det	15882	26	29

PORTABLE CONCRETE BARRIER LAYOUT			
OPERATING SPEED	DESIRABLE LATERAL OFFSET FROM T.W. **	MAXIMUM FLARE RATE * (FREE-STANDING)	MINIMUM LENGTH OF PCB SYSTEM
≤ 30 MPH	2′	7:1	
40 MPH	5′	9:1	
50 MPH	6.5′	11:1	
60 MPH	8′	13:1	
70 MPH	10′	15:1	
ALL SPEEDS	15′MAX ***		100′

* MEASURE FLARE FROM A LINE PARALLEL TO THE ROADWAY ℄, WHETHER ON A CURVE OR A TANGENT.

** FOR RESTRICTED SITE CONDITIONS, LESSER OFFSETS MAY BE PERMITTED BY THE ENGINEER.

*** TO REDUCE POTENTIAL FOR HIGH-ANGLE IMPACTS (> 15°)

GENERAL NOTES

1. THE PORTABLE CONCRETE BARRIER DETAILS, AS SHOWN ON THIS SHEET, ARE IN COMPLIANCE WITH THE REQUIREMENTS OF NCHRP REPORT 350.
2. CONCRETE BARRIER SHALL BE FURNISHED BY THE CONTRACTOR AND PAID AS ITEM 606.95, TEMPORARY TRAFFIC CONTROL BARRIER. AND TREATMENTS AND CONNECTIONS TO EXISTING BARRIERS, WHEN REQUIRED, SHALL BE SUBSIDIARY TO ITEM 606.95.
3. THE CONTRACTOR SHALL FURNISH AND INSTALL APPROVED RETROREFLECTIVE DELINEATORS AT 25-FOOT INTERVALS ALONG THE TOP AND/OR ONE FOOT DOWN THE SIDE OF THE PORTABLE CONCRETE BARRIER, SUBSIDIARY TO ITEM 606.95. THE COLOR OF DELINEATORS SHALL, IN ALL CASES, CONFORM TO THE COLOR OF EDGE LINE MARKINGS. DELINEATORS SUPPLEMENT, BUT DO NOT REPLACE, THE NEED FOR RETROREFLECTIVE SOLID EDGE LINE MARKINGS.
4. UNPROTECTED OPENINGS IN PORTABLE CONCRETE BARRIER WILL NOT BE PERMITTED, UNLESS SPECIFICALLY AUTHORIZED BY THE ENGINEER.
5. A 10:1 OR FLATTER FORESLOPE (SUBSIDIARY TO ITEM 606.417) SHALL BE PROVIDED IN ADVANCE OF ALL PORTABLE CONCRETE BARRIER SYSTEMS WITHIN THE CLEAR ZONE. REFER TO THE **ROADSIDE DESIGN GUIDE** AASHTO, 2006, FOR CLEAR ZONE WIDTHS AND ADDITIONAL INFORMATION.
6. WHEN PORTABLE CONCRETE BARRIER IS INSTALLED ON BOTH SIDES OF TRAFFIC, THE BEGINNINGS OF THE BARRIER SHALL BE STAGGERED BY AT LEAST 50 FEET.
7. OTHER BARRIER CONFIGURATIONS AND END CONNECTIONS ARE SUBJECT TO APPROVAL BY THE ENGINEER. BARRIERS OF DIFFERENT GEOMETRIC SHAPES SHALL NOT BE MIXED ON THE SAME RUN.
8. PLACE RETROREFLECTORIZED DRUMS OR BARRICADES IN ACCORDANCE WITH 6C-2 OF THE MUTCD IN ADVANCE OF PORTABLE CONCRETE BARRIER TO WARN AND ALERT DRIVERS.
9. DETAILS FOR ANCHOR BOLTS ARE SHOWN ONLY FOR USE AS REQUIRED OR DIRECTED.
10. TEMPORARY LIGHTS SHALL BE PAID UNDER ITEM 670.101 (SEE PLAN SHEET XX).

MATERIAL NOTES

1. BARRIERS SHALL BE LIGHT COLORED CLASS "AA" CONCRETE HAVING A MINIMUM 28 DAY COMPRESSION STRENGTH OF 4,000 PSI. BARRIERS SHALL HAVE A SMOOTH UNIFORM SURFACE FREE OF DEFECTS AND IRREGULARITIES. CASTING DATE SHALL BE SHOWN ON BARRIER. ALL EXPOSED EDGES OF CONCRETE SHALL BE CHAMFERED 3/4" UNLESS OTHERWISE NOTED.
2. ALL REINFORCING STEEL SHALL BE AASHTO M31 (ASTM-A615) GRADE 60. REINFORCEMENT SHOWN IS THE MINIMUM REQUIRED.
3. EACH BARRIER UNIT SHALL INCLUDE ONE LINKING PIN.
4. LIFTING OPTIONS SHOWN ARE ADVISORY ONLY. IT SHALL BE THE CONTRACTORS' RESPONSIBILITY TO PROVIDE ADEQUATE LIFTING POINTS ON EACH BARRIER.
5. CONNECTING DEVICES SHALL BE COMPATIBLE WITH OTHER UNITS AND SHALL ALLOW PLACEMENT ON A 110′ RADIUS.
6. DELINEATORS SHALL BE ATTACHED TO THE BARRIER USING AN APPROVED ADHESIVE MATERIAL OR BY BOLTS AND ANCHORS AS SHOWN ON STANDARD NO. DL-1.

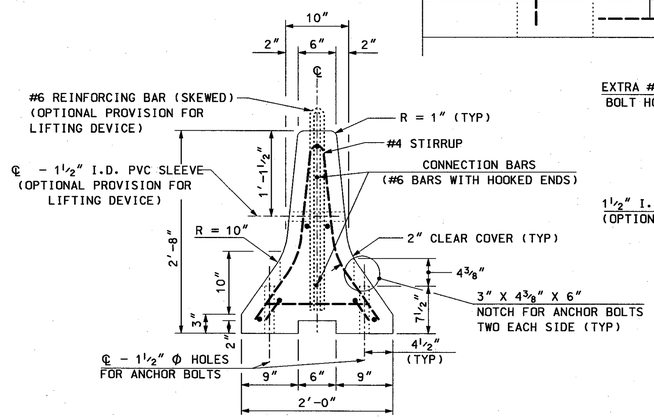

TYPICAL SECTION

SCALE: 1″ = 1′-0″

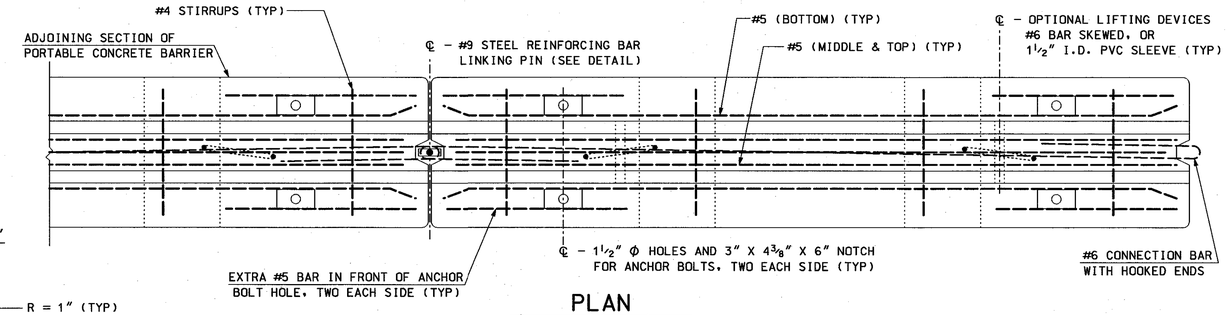

PLAN

SCALE: 1″ = 1′-0″

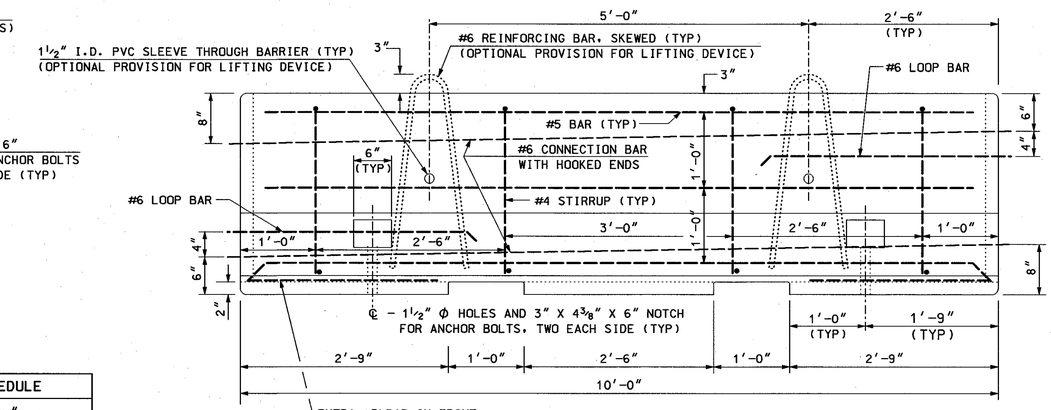

ELEVATION

SCALE:1″ = 1′-0″

PORTABLE CONCRETE BARRIER REINFORCING SCHEDULE			
DESCRIPTION	SIZE	NO.	UNBENT LENGTH
CONNECTION BARS	#6	2	14′-9½″
BOTTOM LONGITUDINAL	#5	2	9′-10″
CENTER & TOP LONGITUDINAL	#5	3	9′-4″
BOTTOM TRANSVERSE	#5	4	1′-4″
STIRRUPS	#4	4	5′-0″
EXTRA ANCHOR HOLE BARS	#5	4	2′-5″
LIFTING DEVICE (OPTIONAL)	#6	2	5′-4″
LOOP BAR	#6	2	6′-10¼″

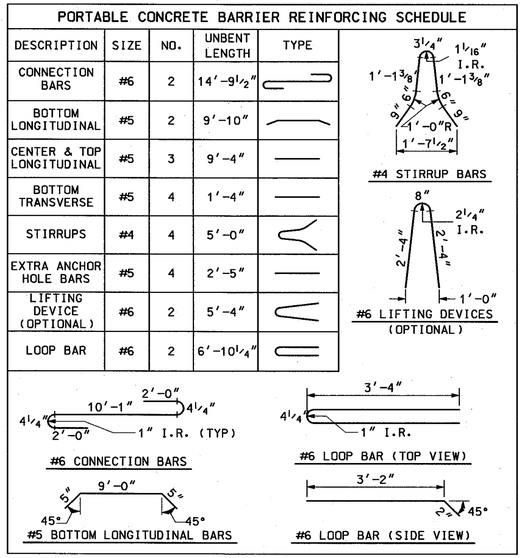

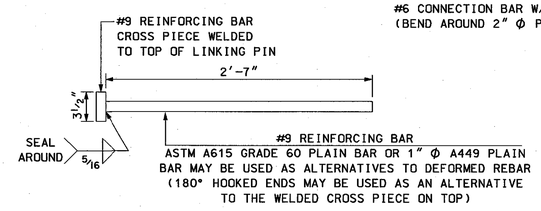

LINKING PIN

SCALE: 1″ = 1′-0″

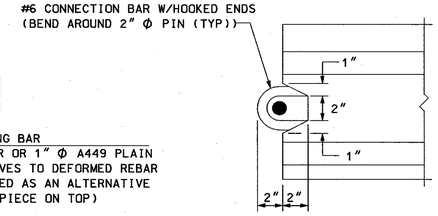

END NOTCH DETAIL

SCALE: 2″ = 1′-0″

FILE NO. 115-4-3

REVISION DATES
12-30-08

STATE OF NEW HAMPSHIRE

DEPARTMENT OF TRANSPORTATION

PORTABLE CONCRETE BARRIER

SHEET SCALE	SUBDIRECTORY	DGN	STATE PROJECT NO.	SHEET NO.	TOTAL SHEETS
AS NOTED	Prj/CutSheet	15882PCB4-3LP10	15882	27	29

GR-2
REVISION DATE
7-13-01
XX-XX-08

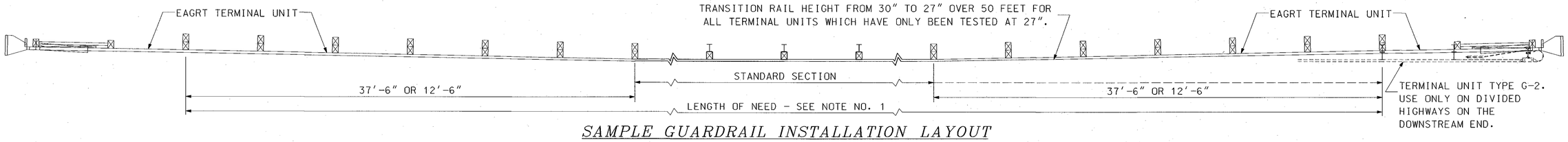

SAMPLE GUARDRAIL INSTALLATION LAYOUT

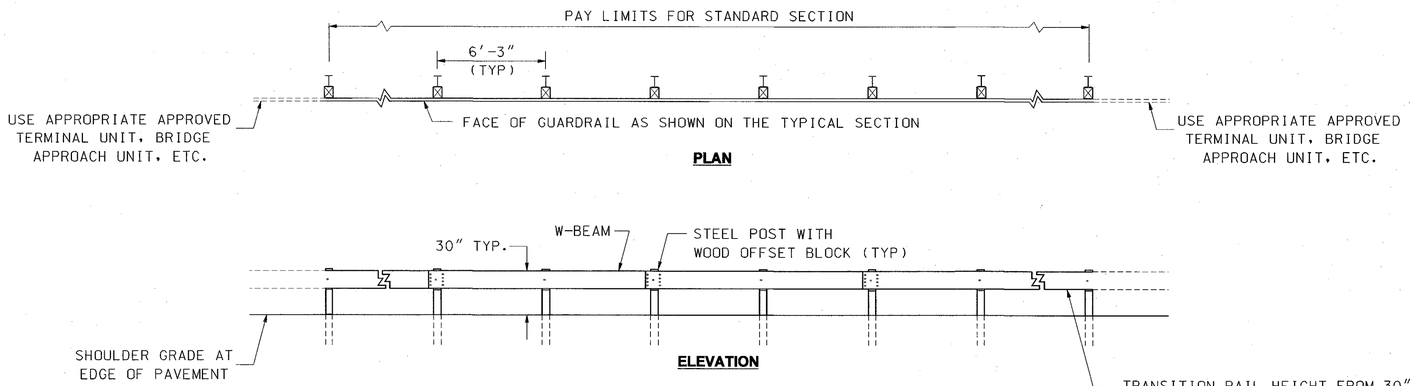

STANDARD SECTION

ITEM NO: 606.120 - BEAM GUARDRAIL (STANDARD SECTION-STEEL POSTS)
PAID: LINEAR FOOT
USE: WHEREVER GUARDRAIL IS REQUIRED **(NOTE: STEEL POSTS FOR PERMANENT INSTALLATIONS MAY ONLY BE USED IF SPECIFICALLY APPROVED BY THE CHIEF ENGINEER.)**

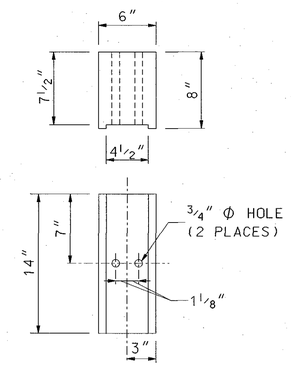

WOOD BLOCK
[PDB01b-MODIFIED]

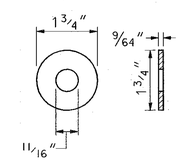

WASHER
[FWC16a]

GENERAL NOTES

1. LENGTH OF NEED IS THE TOTAL LENGTH OF A LONGITUDINAL BARRIER NEEDED TO SHIELD AN AREA OF CONCERN. TO DETERMINE THE LENGTH OF NEED, REFER TO THE *"ROADSIDE DESIGN GUIDE"* - LATEST ADOPTED VERSION.
2. DESIGNATIONS PROVIDED IN BRACKETS [ ] REFERENCE STANDARD ELEMENTS DETAILED IN *"A GUIDE TO STANDARDIZED HIGHWAY BARRIER HARDWARE"*, LATEST ADOPTED VERSION, AASHTO-AGC-ARTBA JOINT COOPERATIVE COMMITTEE.
3. THE RECTANGULAR PLATE WASHER [FWR03] IS USED ONLY FOR 37'-6" OF STANDARD SECTION UPSTREAM OF A TERMINAL UNIT TYPE G-2 (SEE STANDARD NO. GR-8).
4. USE 12'-6" LENGTH RAIL ELEMENT IN CURVES OF LESS THAN 300' RAIL RADIUS.
5. WHEN GUARDRAIL IS INSTALLED BEHIND CURB, EITHER 6'-0" BEHIND SLOPE CURB ON A CURBED RAMP OR AT THE BACK OF SIDEWALK WITH BARRIER CURB, THE RAIL HEIGHT SHALL BE SET FROM THE GRADE AT THE FACE OF RAIL.
6. POSTS SHORTER THAN THE 7'- 0" INDICATED ON THE DETAIL, BUT NOT LESS THAN 6'-0", MAY ONLY BE USED WHEN
   A) THE SLOPE BEHIND THE GUARDRAIL IS NO STEEPER THAN 4:1
   B) WHERE THE DISTANCE FROM THE BACK OF THE POST TO THE BREAK OF THE SLOPE IS A MINIMUM OF 2'-0"
   C) AND THEN ONLY AS APPROVED OR SPECIFICALLY SHOWN ON THE PLANS.
7. TO INSTALL THE 7' 0" POSTS IN ROCK FILL AREAS AND IN AREAS OF OTHER DIFFICULT SITE CONDITIONS, METHODS SUCH AS AUGURING, EXCAVATING, AND OTHER MORE UNUSUAL METHODS MAY BE REQUIRED FOR INSTALLING POSTS. THOSE CONDITIONS AND THE REQUIREMENT FOR UNUSUAL METHODS OF POST INSTALLATION ARE NOT CONSIDERED JUSTIFICATION FOR REDUCING THE EMBEDMENT DEPTH OF THE POSTS AND WILL NOT BE APPROVED AS SUCH.
8. THE FHWA ADMINISTRATION HAS APPROVED THE USE OF OFFSET BLOCKS WITH DIMENSIONS THAT VARY MORE THAN WOULD BE CONSIDERED WITHIN THE NORMAL CONTEXT OF NOMINAL DIMENSIONS. IN ORDER TO PROPOSE THE USE OF ANY OFFSET BLOCKS THAT HAVE OTHER THAN THE NOMINAL DIMENSIONS SHOWN ON THE DETAILS, THE FOLLOWING CRITERION APPLIES:
   A) THE OFFSET BLOCKS BE SHOWN TO BE APPROVED BY THE FHWA ADMINISTRATION AS MEETING THE TL-3 CRITERIA AS DESCRIBED IN THE NCHRP 350 TESTING,
   B) THE FACE OF RAIL MUST REMAIN AT THE EDGE OF PAVEMENT OR AT THE INDICATED OFFSET, PER THE DESIGN PLANS, AND
   C) THERE MUST NOT BE A DECREASE IN THE DISTANCE FROM THE BACK OF THE POST TO THE BREAK IN THE SLOPE AS SHOWN ON THE DESIGN PLANS. AN INCREASE IN THE DISTANCE FROM THE BACK OF THE POST TO THE BREAK IN THE SLOPE IS ACCEPTABLE.
   D) ALL OTHER REQUIREMENTS OF THE PERTINENT SPECIFICATIONS AND DETAILS REMAIN IN FORCE.

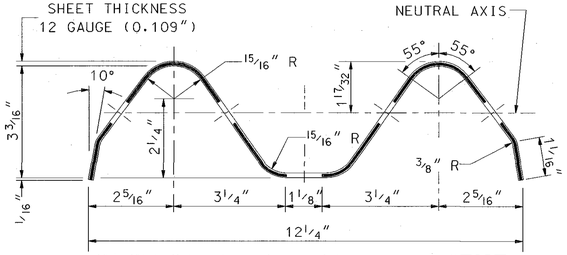

SECTION THRU RAIL ELEMENT
[RWM02a (12'-6") OR RWM22a (25'-0")]

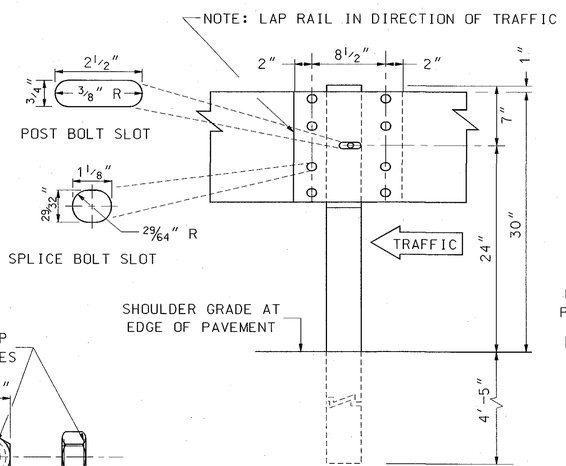

LINE POST ELEVATION VIEW AT BEAM SPLICE

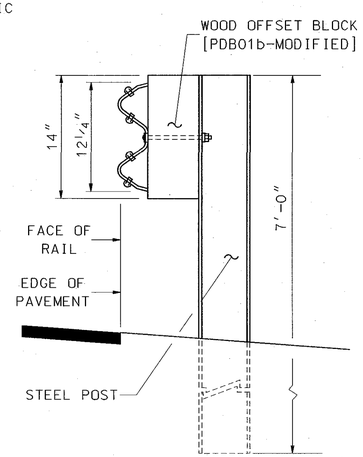

TYPICAL SIDE VIEW
(SHOWN WITH FASTENERS)

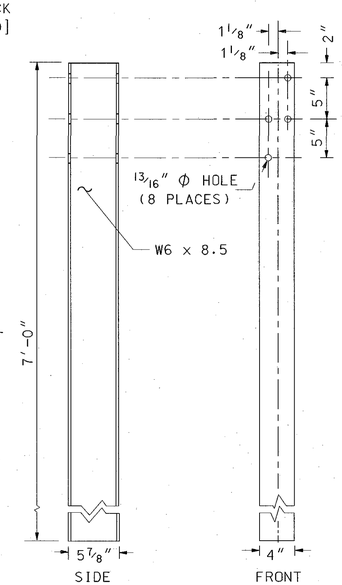

STEEL POST

STRUCTURAL SHAPE STEEL POST & BLOCK
[PWE02]

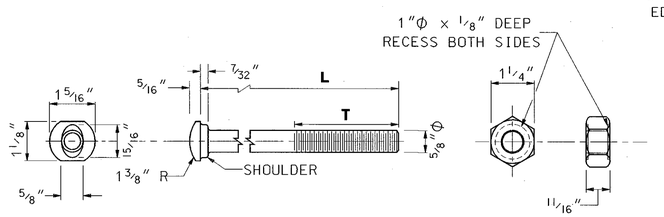

DESIGNATOR	L	T	INTENDED USE
FBB01	1 1/4"	FULL LENGTH THREAD	RAIL SPLICE BOLTS
FBB02	2"	1 3/4" MIN. THREAD LENGTH	POST BOLT (STEEL POSTS)
FBB03	10"	4" MIN. THREAD LENGTH	POST BOLT
FBB04	18"	4" MIN. THREAD LENGTH	POST BOLT (WOOD POSTS)
FBB05	25"	4" MIN. THREAD LENGTH	POST BOLT (DOUBLE-FACED RAIL)

5/8" BUTTON HEAD BOLT AND RECESSED NUT
[FBB01-05]

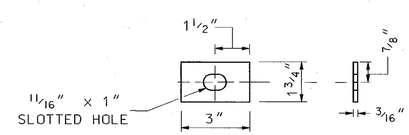

RECTANGULAR PLATE WASHER
[FWR03] (6 REQ'D)
(SEE NOTE 3)

FILE NO. 115-4-3

STATE OF NEW HAMPSHIRE
DEPARTMENT OF TRANSPORTATION • BUREAU OF HIGHWAY DESIGN

BEAM GUARDRAIL STANDARD SECTION - STEEL POSTS & HARDWARE DETAILS

SUBDIRECTORY	DGN	STATE PROJECT NO.	SHEET NO.	TOTAL SHEETS
Prj/CutSheet	15882GR-2copy	15882	28	29

ALTERNATIVE PLATFORM FOR ENERGY ABSORBING GUARDRAIL TERMINAL (EAGRT)

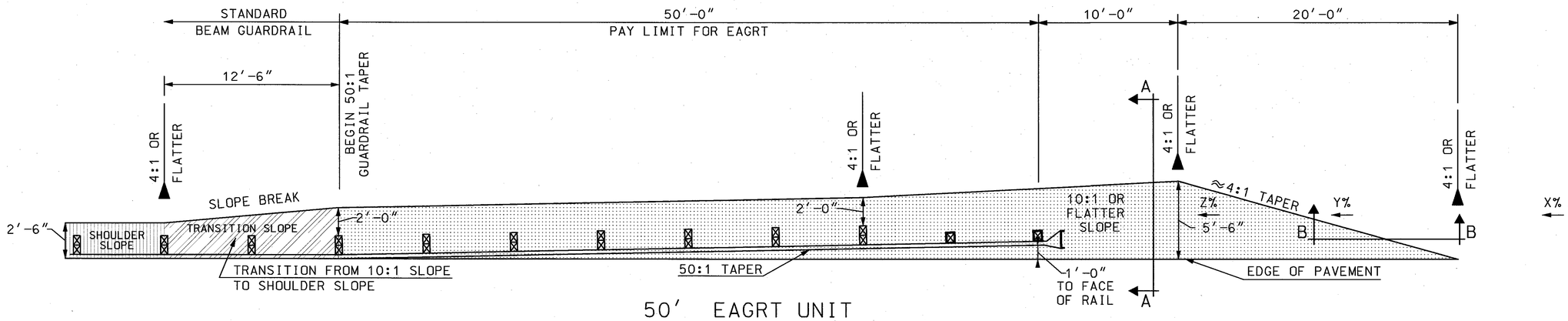

50′ EAGRT UNIT

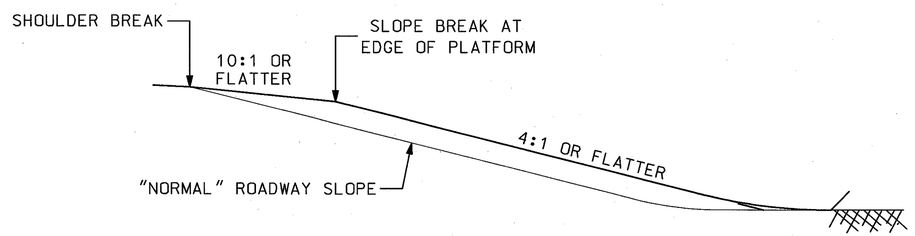

SECTION A–A
PLATFORM SLOPE GRADING

X: LONGITUDINAL GRADE OF ROADWAY SLOPE IN ADVANCE OF PLATFORM
Y: LONGITUDINAL GRADE OF PLATFORM APPROACH
Z: LONGITUDINAL GRADE OF PLATFORM

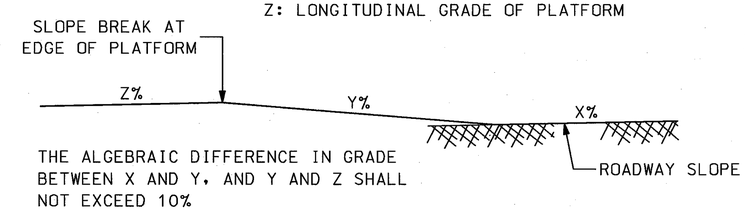

SECTION B–B
PLATFORM APPROACH GRADING

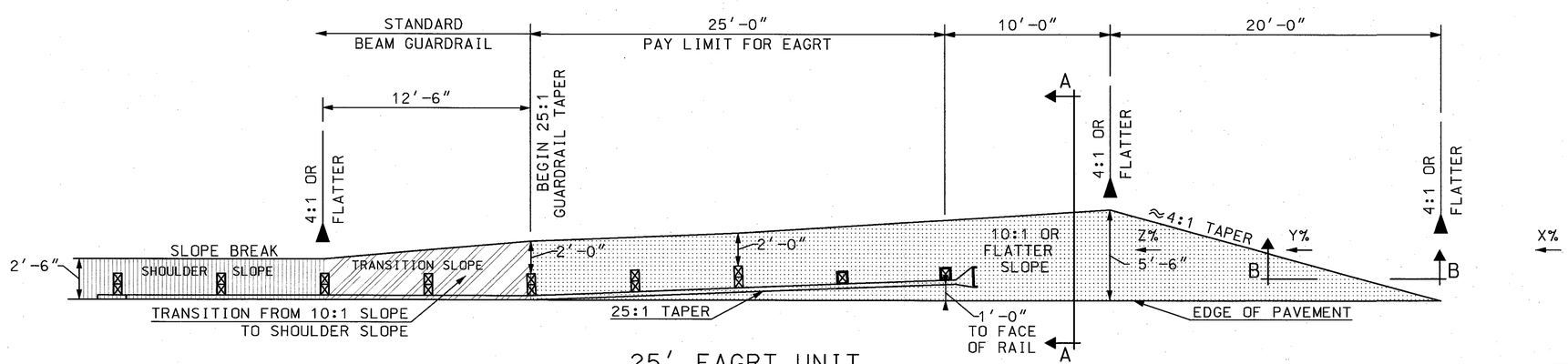

25′ EAGRT UNIT

FILE NO. 115-4-3

STATE OF NEW HAMPSHIRE

DEPARTMENT OF TRANSPORTATION • BUREAU OF HIGHWAY DESIGN

EAGRT ALTERNATIVE PLATFORM GRADING

SUBDIRECTORY	DGN	STATE PROJECT NO.	SHEET NO.	TOTAL SHEETS
Prj/CutSheet	15882EAGRTALT	15882	29	29

REVISIONS AFTER PROPOSAL			
NUMBER	DATE	STATION	STATION	DESCRIPTION

SDR PROCESSED	XX	DATE	XX
NEW DESIGN	NHDOT	DATE	XX
SHEET CHECKED	NHDOT	DATE	XX
AS BUILT DETAILS		DATE	