THE STATE OF NEW HAMPSHIRE
DEPARTMENT OF TRANSPORTATION

PLANS OF PROPOSED
FEDERAL - AID PRIMARY
PEDESTRIAN UNDERPASS PROJECT

F - 012 - 2(32)

N.H. PROJECT NO. 11139

U.S. ROUTE 4 AT COE-BROWN ACADEMY

DESIGN DATA

AVERAGE DAILY TRAFFIC 19 90	12,800	
AVERAGE DAILY TRAFFIC 2010	33,900	
PERCENT OF TRUCKS	8	%
DESIGN SPEED	50	M.P.H.
LENGTH OF PROJECT	0.227	MILES

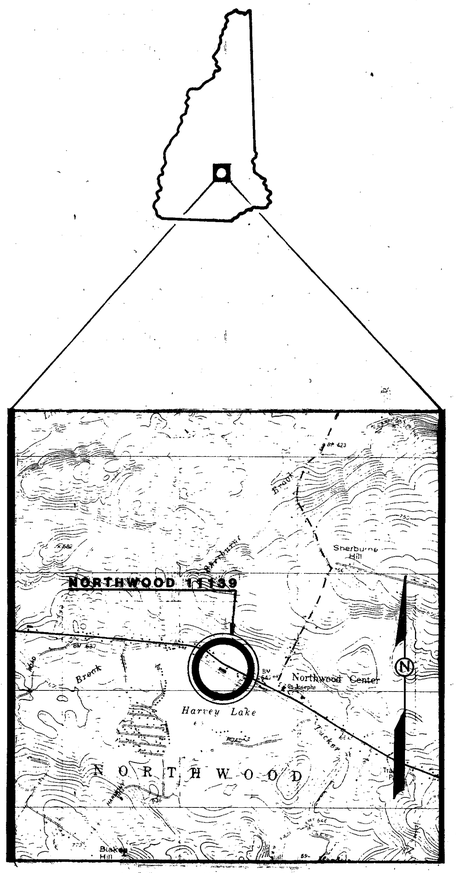

LOCATION MAP

2000 0 2000 4000

GRAPHIC SCALE 1" = 2000'

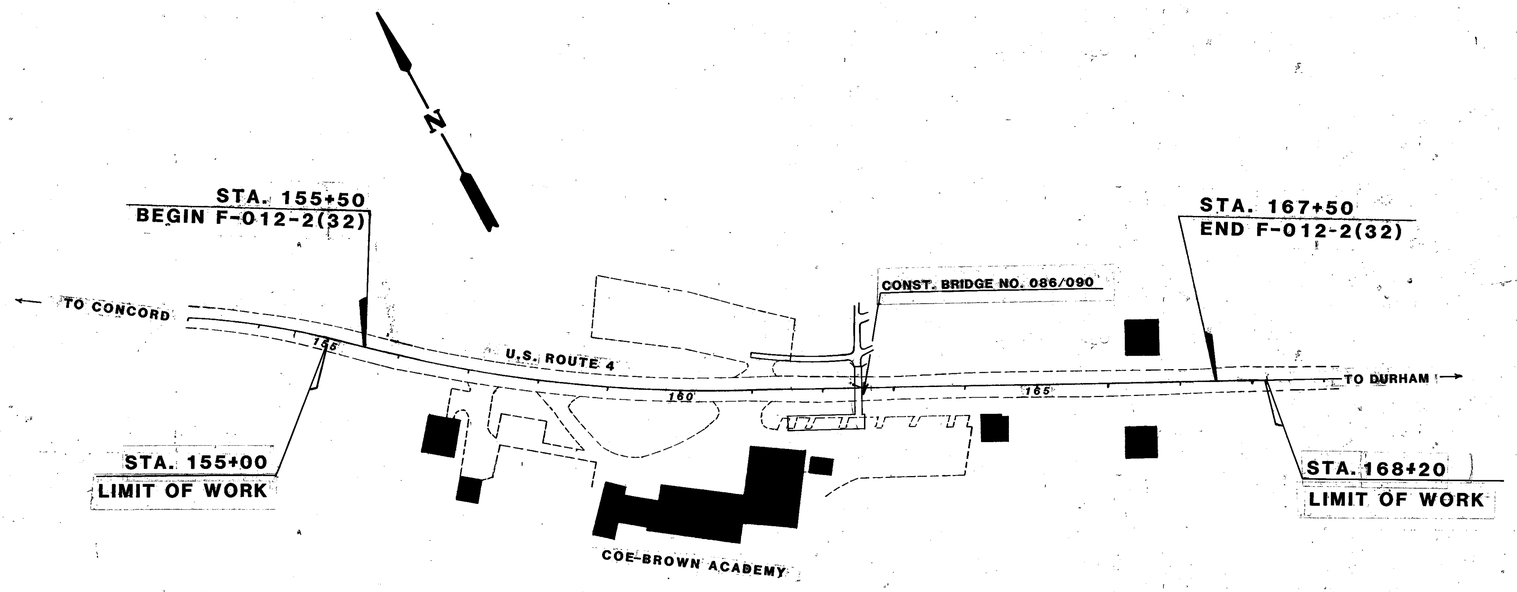

SCALE 1" = 100'

TOWN OF NORTHWOOD

COUNTY OF ROCKINGHAM

NHDOT THE STATE OF New Hampshire Department of Transportation

RECOMMENDED FOR APPROVAL:
5-11-90 DATE — Robert W. Sum — DIRECTOR OF PROJECT DEVELOPMENT

APPROVED:
5/11/90 DATE — Wallace E. Stickney — COMMISSIONER

U. S. DEPARTMENT OF TRANSPORTATION
FEDERAL HIGHWAY ADMINISTRATION

APPROVED:
DIVISION ADMINISTRATOR — DATE

FEDERAL PROJECT NO.	STATE PROJECT NO.	SHEET NO.	TOTAL SHEETS
F-012-2(32)	11139	1	48

DRAWN BY	S. GUNN	DATE 4-2-90
CHECKED BY	J. KIROUAC	DATE 5-11-90

AS BUILT PLANS

BRUNING 58839

INDEX OF SHEETS

SHEET NO.	DESCRIPTION
1	TITLE PAGE
2	INDEX OF SHEETS & GENERAL NOTES
3	INDEX OF STANDARD SHEETS & CONSTRUCTION SIGN STANDARD SHEETS
4	STANDARD SYMBOLS
5	TYPICAL SECTIONS OF IMPROVEMENT ROAD TYPICAL
6,7	SUMMARIES OF QUANTITIES
8,9	MISCELLANEOUS DETAILS
10	EROSION CONTROL DETAIL
11	SPECIAL GUARD RAIL DETAIL
12	SPECIAL GUARD RAIL TERMINALS
13	PORTABLE CONCRETE BARRIER
14-32	BRIDGE PLANS, 19 PAGES
33-36	GENERAL ROADWAY PLANS, 4 PAGES
37-48	MAINLINE CROSS SECTIONS, 12 PAGES

THE FOLLOWING GENERAL NOTES WILL BE USED ON THIS PROJECT:

1	2	3		5	6	7					
13						19				23	24
25	26	27		29							

GENERAL NOTES

1. THIS PROJECT TO BE CONSTRUCTED IN ACCORDANCE WITH STANDARD SPECIFICATIONS DATED 1983 AND SUPPLEMENTAL SPECIFICATIONS, CURRENT STANDARD SHEETS AND SPECIAL PROVISIONS ATTACHED TO THE PROPOSAL.

2. ADJUSTING, ALTERING OR RELOCATING THE PROPERTY OF ANY PUBLIC UTILITY SHALL BE DONE BY THE OWNER, NOT A PART OF THIS CONTRACT. THE CONTRACTOR SHALL COOPERATE WITH THE OWNER IN THE PERFORMANCE OF THE WORK.

3. HIGH TENSION OVERHEAD TRANSMISSION LINES ARE LOCATED THROUGHOUT THE PROJECT WITH CROSSINGS AT VARIOUS LOCATIONS AND RUNNING ALONG THE ROAD THROUGHOUT THE PROJECT EVEN ON REGULAR POLES. THE CONTRACTOR IS ADVISED THAT EXTREME CAUTION WILL BE REQUIRED IN THE OPERATION OF EQUIPMENT, ESPECIALLY CRANES AND PILE DRIVING EQUIPMENT.

4. ALL EXISTING UTILITY POLES WILL BE RELOCATED BY OTHERS TO A MINIMUM OF ____ FEET FROM THE ROADWAY CENTERLINE.

5. THE LOCATION OF EXISTING UNDERGROUND UTILITIES SHOWN ARE APPROXIMATE. THE EXACT LOCATION SHOULD BE ESTABLISHED IN THE FIELD BY THE UTILITY COMPANY PRIOR TO ANY EXCAVATION OR POST DRIVING.

6. DRIVES SHALL BE REPLACED IN KIND EXCEPT AT THOSE LOCATIONS WHERE DRIVES HAVE BEEN STEEPENED TO THE EXTENT THAT A MORE STABLE SURFACE IS WARRANTED. ALL GRAVEL DRIVES TO RESIDENCES AND OTHER GRAVEL DRIVES WHEN ORDERED, SHALL BE CONSTRUCTED WITH A PAVED APRON ADJACENT TO THE SHOULDER.

7. TOPSOIL SHALL BE REMOVED FOR ITS TOTAL DEPTH WITHIN THE LIMITS OF THE SLOPE LINES. UNLESS OTHERWISE DIRECTED, THE TOPSOIL SHALL BE STOCKPILED AND USED IN ITS ENTIRETY UNDER SECTION 641 - LOAM AND/OR SECTION 647 - HUMUS.

8. UNSUITABLE MATERIAL, ROOTS AND STUMPS WITHIN THE LIMITS OF THE ROAD BED, SHALL BE REMOVED AS ORDERED.

9. MUCK SHALL BE REMOVED BY EXCAVATION UNDER ITEM (203.1), (203.4), OR BY DISPLACEMENT, AS ORDERED.

10. THE SUBGRADE SHALL BE SCARIFIED TO ASSURE THAT ALL BOULDERS AND COBBLES OVER 6 INCHES ARE REMOVED WITHIN 36 INCHES OF FINISHED GRADE. THIS WORK AND RECOMPACTION OF THE SUBGRADE WILL BE PAID UNDER ITEM 212.1 - SCARIFYING.

11. EXISTING LEDGE AND BOULDER OUTCROPS ARE TO BE REMOVED AND/OR BERMED AS SHOWN OR AS ORDERED.

12. HUMUS SHALL BE APPLIED TO ALL EARTH SLOPES NOT LOAMED TO A NOMINAL DEPTH OF 3-1/2 INCHES (471 C.Y./ACRE), UNLESS OTHERWISE ORDERED.

13. ALL NEW EARTH SLOPES SHALL BE MULCHED.

14. THE SLOPES AROUND EXTENDED PIPES SHALL BE FLATTENED AND GRADED AS SHOWN OR ORDERED.

15. ASPHALT SURFACE TREATMENT INCLUDING SAND COVER SHALL BE APPLIED TO THE TRAVELED WAY AS A PRIME COAT AT THE RATE OF 0.50 GALLONS PER SQUARE YARD IN ONE APPLICATION, OR AS ORDERED.

16. ASPHALT SURFACE TREATMENT INCLUDING SAND COVER SHALL BE APPLIED TO THE SHOULDER AS A PRIME COAT AT THE RATE OF 0.50 GALLONS PER SQUARE YARD IN ONE APPLICATION, OR AS ORDERED.

17. THE PAVEMENT OVERLAY SHALL BE WARPED TO MATCH EXISTING CATCH BASINS, DROP INLETS, AND/OR SIMILAR STRUCTURES.

18. EXISTING CONCRETE PAVEMENT REMOVAL WILL BE PAID UNDER ITEM 203.2 - ROCK EXCAVATION (____C.Y./100 L.F.). THE BITUMINOUS PAVEMENT ABOVE THE CONCRETE WILL NOT BE PAID UNDER ITEM 203.2.

19. RESTORE SUPERELEVATION ON EXISTING CURVES BY THE USE OF A PAVEMENT LEVELING COURSE AS INDICATED ON PLANS OR AS ORDERED.

20. ALL CRACKS IN THE PAVEMENT MEASURING 1/4 INCH OR MORE IN WIDTH, OR AS ORDERED, SHALL BE TREATED WITH CRACK FILLER WITHIN THE LIMITS DESIGNATED ON THE PLANS.

21. ADJUSTMENT OF CATCH BASINS AND DROP INLETS OR SIMILAR STRUCTURES TO THE NEW PAVEMENT GRADE SHALL BE DONE AS ORDERED. PAYMENT WILL BE UNDER ITEM 604.45 - ADJUSTING CATCH BASIN AND DROP INLET GRATES AND FRAMES SET BY OTHERS.

22. EXISTING ANCHORS FOR CABLE GUARD RAIL SHALL BE DUG UP AND SALVAGED INTACT TO THE STATE.

23. ALL GUARD RAIL SHALL BE SET AT A 27 INCH RAIL HEIGHT BASED ON THE PAVEMENT OVERLAY, UNLESS OTHERWISE SHOWN OR ORDERED.

24. EXISTING DELINEATORS AND WITNESS MARKERS THAT ARE DISTURBED SHALL BE RESET. THIS WORK WILL BE SUBSIDIARY. ADDITIONAL DELINEATORS ORDERED WILL BE PAID UNDER APPROPRIATE ITEMS OF THE CONTRACT.

25. NO EXISTING MONUMENTS, BOUNDS, OR BENCHMARKS SHALL BE DISTURBED WITHOUT FIRST MAKING PROVISIONS FOR RELOCATION.

26. UNPROTECTED PROJECT MARKERS SHALL BE REMOVED OR SET BACK TO 30 FEET FROM THE TRAVELED WAY AS ORDERED. THIS WORK WILL BE SUBSIDIARY.

27. CLEARING AND GRUBBING ON THIS PROJECT WILL BE SUBSIDIARY.

28. ALL WORK ON THIS PROJECT, UNLESS OTHERWISE SHOWN ON THE PLANS OR ORDERED, SHALL BE CONSTRUCTED WITHIN THE EXISTING RIGHT-OF-WAY.

29. COORDINATES FOR THIS PROJECT ARE (ASSUMED) AND THE BEARING SHOWN ARE (CALCULATED).

30. NOTWITHSTANDING STANDARD SHEETS 6, 6A, & 7 PERTAINING TO GUARD RAIL INSTALLATION, THE FOLLOWING SHALL APPLY:
    - a) THE RECTANGULAR PLATE WASHERS TYPICALLY DETAILED FOR INSTALLATION UNDER THE HEAD OF THE 5/8 INCH DIAMETER BUTTON HEAD POST MOUNTING SHALL NOT BE USED.
    - b) NEW W-BEAM GUARD RAIL INSTALLATIONS WILL USE POSTS 7 FEET LONG.
    - c) NEW W-BEAM GUARD RAIL INSTALLATIONS WILL USE 6"x8" BLOCKOUTS EXCLUSIVELY (NO OPTION FOR 6"x6".) THE BLOCKOUTS WILL BE NAILED TO THE POSTS USING A 10d NAIL TO PREVENT ROTATION.
    - d) OTHER GUARDRAIL DETAILS CONTAINED WITHIN THE PLANS (SHEETS 11 & 12) SUPERSEDE THOSE IN THE STANDARD SHEETS.

REVISIONS AFTER PROPOSAL			
NUMBER	DATE	STATION	STATION

DESCRIPTION

NOTEBOOKS		
BOOK	PAGE	
BOOK	PAGE	
BOOK	PAGE	

EXISTING DETAIL	DATE	
PROPOSED DESIGN	DATE	
SHEET CHECKED	DATE	5-11-90
AS BUILT DETAILS	DATE	

J. Krouse

STATE OF NEW HAMPSHIRE
DEPARTMENT OF TRANSPORTATION - BUREAU OF HIGHWAY DESIGN

INDEX OF SHEETS AND GENERAL NOTES

FEDERAL PROJECT NO.	STATE PROJECT NO.	SHEET NO.	TOTAL SHEETS
F-012-2(32)	11139	2	48

BRUNING 58839

STANDARD SHEETS

STANDARD	NO. 1	CONCRETE AND M.R.M. HEADWALLS	REVISED	MARCH 24, 1977
STANDARD	NO. 1-A	CONCRETE AND M.R.M. HEADWALLS	REVISED	MAY 8, 1970
STANDARD	NO. 2	STEEL ARCH PIPES, SLOPE PAVING, UNDERDRAIN HEADWALL	REVISED	MARCH 1, 1983
STANDARD	NO. 2-A	CORRUGATED ALUMINUM PIPE, PIPE ARCH, UNDERDRAIN FLUSHING BASIN	REVISED	DECEMBER 20, 1982
STANDARD	NO. 3	CATCH BASINS, DROP INLETS,	REVISED	OCTOBER 17, 1983
STANDARD	NO. 3-A	GRATES FOR C.B.'S & D.I.'S,	REVISED	OCTOBER 17, 1983
STANDARD	NO. 3-B	CATCH BASINS, DROP INLETS, TRAP	REVISED	OCTOBER 17, 1983
STANDARD	NO. 4	CURBING	REVISED	APRIL 21, 1982
STANDARD	NO. 5	CONCRETE BOUND, STEPS	REVISED	NOVEMBER 1, 1984
STANDARD	NO. 5-A	GUTTERS, SLUICE, SLOPES, MUCK EXCAVATION	REVISED	FEBRUARY 26, 1975
STANDARD	NO. 6	BEAM GUARD RAIL	REVISED	JUNE 11, 1981
STANDARD	NO. 6-A	BEAM GUARD RAIL	REVISED	DECEMBER 10, 1981
STANDARD	NO. 7	BEAM GUARD RAIL	REVISED	MAY 15, 1985
STANDARD	NO. 8	3 CABLE GUARD RAIL	REVISED	MARCH 24, 1977
STANDARD	NO. 8-A	3 CABLE GUARD RAIL	REVISED	DECEMBER 10, 1981
STANDARD	NO. 9	WOVEN WIRE & CHAIN LINK FENCE	REVISED	AUGUST 2, 1977
STANDARD	NO. 9-A	STEEL WITNESS MARKER, STEEL SIGN POST, DELINEATOR POST	REVISED	MAY 15, 1985
STANDARD	NO. 10	SIGNAL BASE, PULL BOX, CONDUIT DETAILS, HANDHOLE, FOUND. FOR CONT. CABINET	REVISED	MAY 15, 1985
STANDARD	NO. 10-A	LENS FOR TURNING MOVEMENTS, LIGHT POLE BASE, DETECTORS, PULL BOX	REVISED	NOVEMBER 1, 1984
STANDARD	NO. 11	END SECTIONS FOR PIPES	REVISED	MAY 21, 1975
STANDARD	NO. 12	DELINEATORS FOR: GUARD RAIL, MEDIAN BARRIERS	REVISED	MAY 15, 1985
STANDARD	NO. 12-A	DELINEATOR SPACING FOR RAMPS AND LOOPS	REVISED	MAY 15, 1985
STANDARD	NO. 13	URBAN MARKING AND SIGN POSTING.	REVISED	MARCH 1, 1983
STANDARD	NO. 14	RUBBISH CONTAINER, FIREPLACE, TABLE, SHELTER	REVISED	AUGUST 1, 1969
STANDARD	NO. 15	FIREPLACE, DRINKING FOUNTAIN, WATER PIPE DRAINS, PICNIC SITES	REVISED	MARCH 24, 1977
STANDARD	NO. 16	SIDEWALK RAMPS, CONCRETE ISLAND BLOCKOUTS	REVISED	MAY 15, 1985

CONSTRUCTION SIGN STANDARD SHEETS

CS	NO. 1	GENERAL NOTES	REVISED	MAY 15, 1985
CS	NO. 2	BARRICADES, REMOVAL OF PAVEMENT MARKING, CONES, DRUMS	REVISED	MAY 15, 1985
CS	NO. 3	PANELS & DELINEATORS, LIGHTING DEVICES, SIGN PADDLE, HAZARD MARKER	REVISED	MAY 15, 1985
CS	NO. 4	TRAFFIC CONTROL PROCEDURES, HAUL ROADS, BLASTING ZONES	REVISED	MAY 15, 1985
CS	NO. 5	TYPICAL LAYOUT - PERMANENT CONSTRUCTION SIGNING	REVISED	MAY 15, 1985
CS	NO. 6	SIGNS	REVISED	MARCH 1, 1983
CS	NO. 7	SIGNS	REVISED	MARCH 1, 1983
CS	NO. 8	SIGNS	REVISED	MAY 15, 1985
CS	NO. 9	TWO-WAY TRAFFIC LANE CLOSURE AND SHOULDER WORK	REVISED	MAY 15, 1985
CS	NO. 10	2 LANE DIVIDED, 2 LANE CLOSURE - BREAKDOWN LANE	REVISED	MAY 15, 1985
CS	NO. 11	DETOUR FOR 2 LANE CLOSURE, 2 LANE DIVIDED - BRIDGEWORK	REVISED	MAY 15, 1985
CS	NO. 12	4-LANE DIVIDED - 2 LANE CLOSURE UTILIZING CROSSOVER	REVISED	MAY 15, 1985
CS	NO. 13	MULTI-LANE CLOSURE	REVISED	MAY 15, 1985

THE FOLLOWING STANDARD SHEETS WILL BE USED ON THIS PROJECT:

1				3	3-A	3-B	4		5-A
6	6-A	7			9	9-A			
12	12-A	13							

THE FOLLOWING CONSTRUCTION SIGN STANDARD SHEETS WILL BE USED ON THIS PROJECT:

CS-1	CS-2	CS-3	CS-4	CS-5
CS-6	CS-7	CS-8	CS-9	

REVISIONS AFTER PROPOSAL

NUMBER	DATE	STATION	STATION	DESCRIPTION

NOTEBOOKS

BOOK ____ PAGE ____
BOOK ____ PAGE ____
BOOK ____ PAGE ____

EXISTING DETAIL — DATE
PROPOSED DESIGN — DATE
SHEET CHECKED — DATE 5-11-90 — J. Kirouac
AS BUILT DETAILS — DATE

STATE OF NEW HAMPSHIRE
DEPARTMENT OF TRANSPORTATION - BUREAU OF HIGHWAY DESIGN

STANDARD SHEETS

FEDERAL PROJECT NO.	STATE PROJECT NO.	SHEET NO.	TOTAL SHEETS
F-012-2(32)	11139	9	48

ENGINEERING

- SURVEY OR TRAVERSE LINE (30 31 32 33)
- CONSTRUCTION LINE (30 31 32 33)
- P.C. & P.T. ..... (IN CONST.&TRAVERSE LINES)
- P.I. ..... (IN CONST.&TRAVERSE LINES)
- EQUATION OF TWO LINES
- PROFILE GROUND LINE
- PROFILE GRADE LINE
- CROSS SECTION GROUND LINE (INK)
- CROSS SECTION TEMPLATE LINE (LEAD)
- SLOPE LINE (FILL)
- SLOPE LINE (CUT)
- GROUND ELEVATION (LEFT) 221
- GRADE ELEVATION (RIGHT) 24.12
- PROPERTY PARCEL NUMBER 2
- CLEARING & GRUBBING AREA E
- INTERSTATE NUMBERED HIGHWAY 93
- UNITED STATES NUMBERED HIGHWAY 3
- STATE NUMBERED HIGHWAY 10

DRAINAGE

- MANHOLE (EXISTING) M.H.
- MANHOLE (PROPOSED) M.H.
- CATCH BASIN (EXISTING) C.B.
- CATCH BASIN (PROPOSED) C.B.
- DROP INLET (EXISTING) D.I.
- DROP INLET (PROPOSED) D.I.
- DRAINAGE PIPE (EXISTING) (Label size & type)
- DRAINAGE PIPE (PROPOSED)
- UNDERDRAIN (EXISTING) (Label size & type)
- UNDERDRAIN (PROPOSED)
- HEADER (EXISTING) (Label size & type)
- HEADER (PROPOSED)
- OPEN DITCH (PROPOSED) (Show Direction Of Flow)
- STONE SLOPE PROTECTION

Show Direction Of Flow

BOUNDARIES

- RIGHT OF WAY LINE
- PROPERTY LINE — PL SMITH STANDISH PL
- TOWN LINE — TOWN LINE BOW CONCORD
- COUNTY LINE — COUNTY LINE COOS GRAFTON
- STATE LINE — STATE LINE MAINE NEW HAMPSHIRE
- STONE BOUND S.B.
- IRON PIPE OR PIN I.P.
- NATIONAL FOREST

UTILITIES

- TELEPHONE OR TELEGRAPH POLE
- POWER POLE
- JOINT OCCUPANCY
- POLE
- GUY POLE OR STUB
- NOTE: Remove Or New As Applicable i.e. R N +22 15'
- LIGHT POLE
- LIGHT ON POWER POLE
- LIGHT ON JOINT POLE
- HYDRANT
- MANHOLE
- UNDERGROUND WATER (EXISTING) —W— —W—
- UNDERGROUND WATER (PROPOSED) —PW— —PW—
- UNDERGROUND SEWER (EXISTING) —S— —S—
- UNDERGROUND SEWER (PROPOSED) —PS— —PS—
- UNDERGROUND TELEPHONE (EXISTING) —T— —T—
- UNDERGROUND TELEPHONE (PROPOSED) —PT— —PT—
- UNDERGROUND ELECTRIC (EXISTING) —E— —E—
- UNDERGROUND ELECTRIC (PROPOSED) —PE— —PE—
- GATES & SHUTOFFS W.S.O. (Label W.G., W.S.O., G.S.O., Etc.)
- RAILROAD (Label Ownership)
- RAILROAD SIGN
- RAILROAD SIGNAL
- SIGNAL CONDUIT (EXISTING)
- SIGNAL CONDUIT (PROPOSED)
- MAGNETIC DETECTOR SLEEVE MD
- LOOP DETECTOR 8'x10' EXISTING; 8'x10' PROPOSED
- PULLBOX P.B. EXISTING; P.B. PROPOSED
- HANDHOLE H.H. EXISTING; H.H. PROPOSED
- CONTROLLER CABINET C.C.
- SPREAD FOOTING 15' 8'
- CYLINDRICAL FOUNDATION
- MAST ARM POLE
- STEEL SPAN WIRE POLES
- PEDESTRIAN SIGNAL POLE
- SIGNAL HEAD
- TRAFFIC FLOW
- STOP BAR
- STREET LIGHT CONDUIT
- LUMINAIRE
- STORM DRAINAGE (FORMERLY SEWER) —D— —D—
- UNDERGROUND GAS (EXISTING) —G— —G—
- UNDERGROUND GAS (PROPOSED) —PG— —PG—
- ABANDONED GAS (EXISTING) —AG— —AG—
- OVERHEAD LINES: ELECTRIC, FIRE, CABLE TV, TELEPHONE, TRAFFIC SIGNAL — ····· O-E, F, TV, T, TS, ····· (EXISTING); ——— O-E, F, TV, T, TS, ——— (PROPOSED)

GENERAL CULTURE

- TRAVELED WAY S.T.G.
- DRIVEWAYS Gravel
- BUILDINGS Porch
- FOUNDATION
- GUARD RAIL (PROPOSED) (EXISTING) B.G.R. C.G.R.
- CURB (EXISTING)
- CURB (PROPOSED)
- STEPS AND WALK
- INTERMITTENT WATER COURSE
- SHORE LINE River (Stream) Pond
- SWAMP, MARSH OR WETLANDS
- BRUSH (WOODS) LINE
- TREES (DECIDUOUS)
- TREES (CONIFEROUS)
- STUMPS
- ORCHARD
- HEDGE
- WELL W
- SEPTIC TANK S
- LEACHFIELD Leach Field
- GAS PUMPS
- STORAGE TANKS
- CEMETERY Cem Or +
- BRIDGE CROSSING STREAM
- HIGHWAY OVERPASS
- ROCK OUTCROP
- OLD GROUND (Typicals & Standards Only).
- ROCK LINE
- STONE WALL Or
- RETAINING WALL (Points Toward High Ground)
- FENCE (BARBED WIRE)
- FENCE (OTHER)
- SIGNS

THE STATE OF NEW HAMPSHIRE

DEPARTMENT OF TRANSPORTATION • BUREAU OF HIGHWAY DESIGN

STANDARD SYMBOLS

FEDERAL PROJECT NO.	STATE PROJECT NO.	SHEET NO.	TOTAL SHEETS
F-012-2(32)	11139	4	48

NUMBER	DATE	STATION	STATION	DESCRIPTION

REVISIONS AFTER PROPOSAL

NOTEBOOKS: BOOK PAGE; BOOK PAGE; BOOK PAGE

EXISTING DETAIL — DATE
PROPOSED DESIGN — DATE
SHEET CHECKED — DATE 5-11-90
AS BUILT DETAILS — DATE

J. KIRONAKE

TYPICAL SECTION IMPROVEMENTS

U.S. RTE. 4

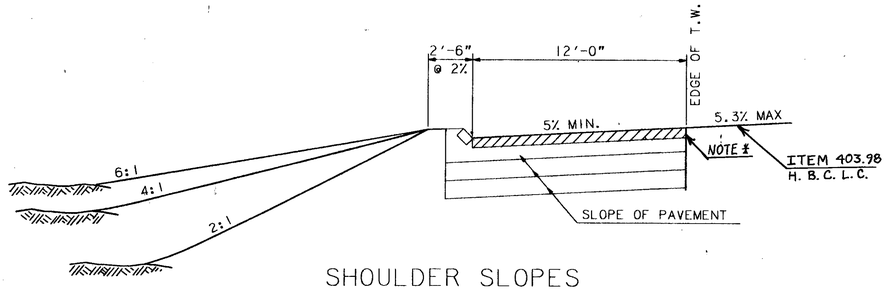

SHOULDER SLOPES
INSIDE BANKED CURVES

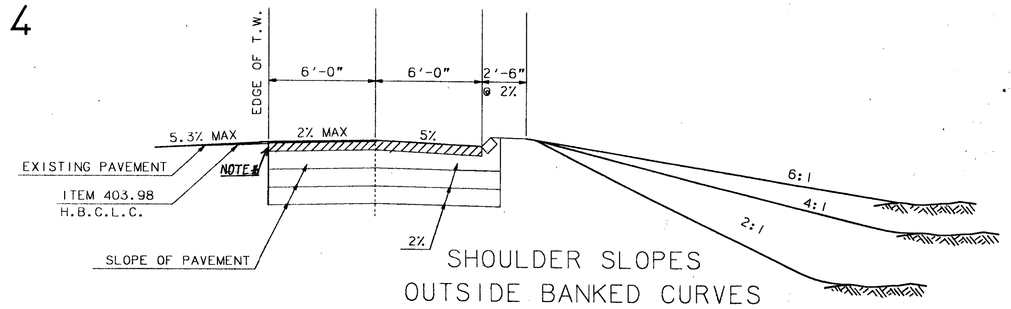

SHOULDER SLOPES
OUTSIDE BANKED CURVES

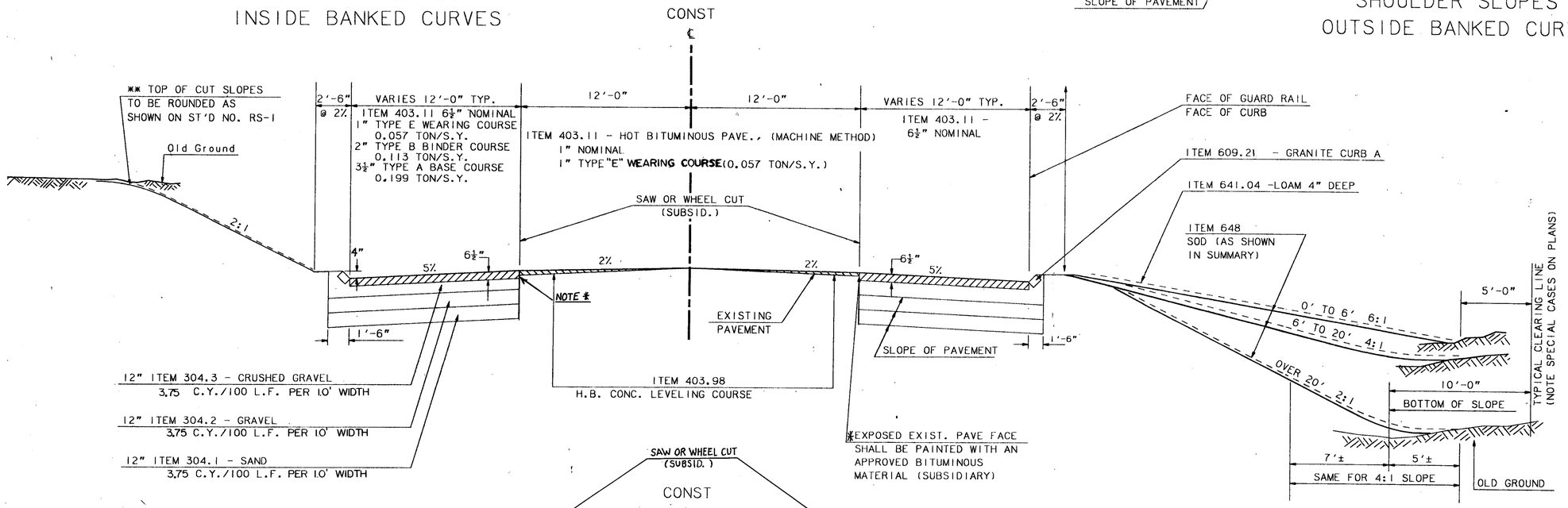

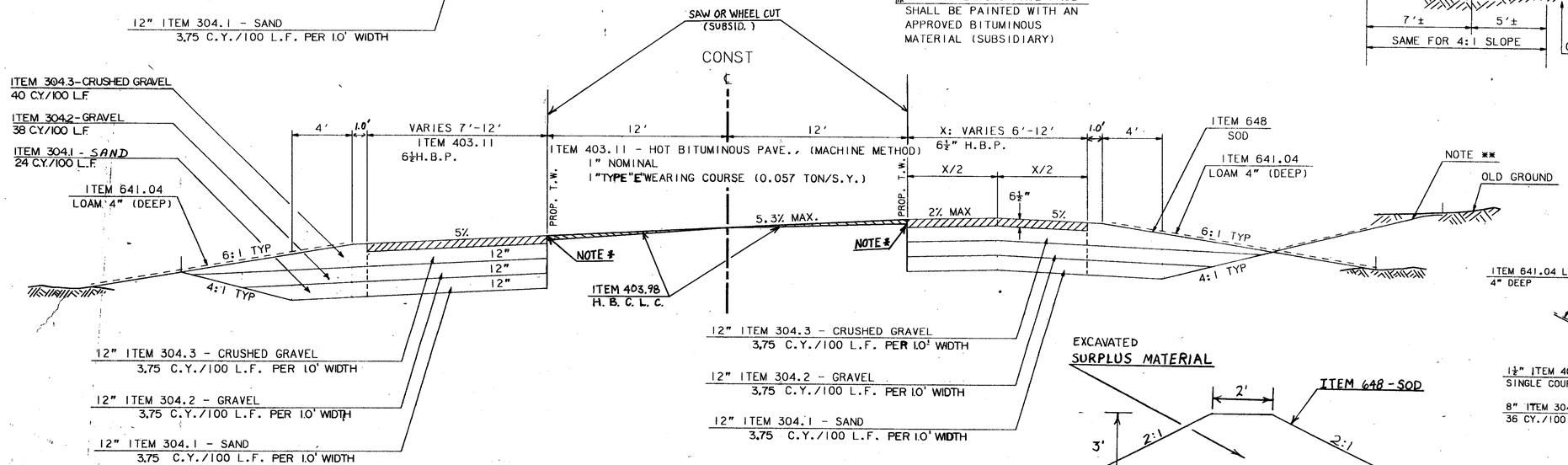

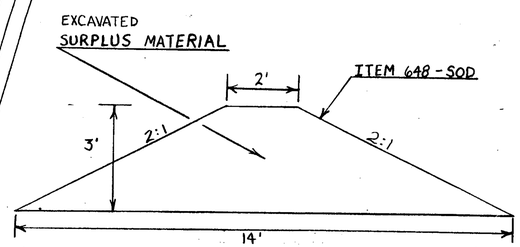

EARTH BERM DETAIL

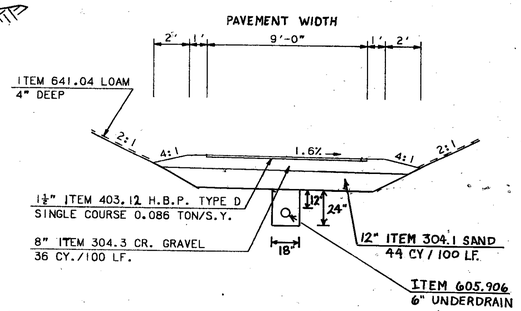

ASPHALT SIDEWALK

NUMBER	DATE	DESCRIPTION	STATION	STATION

REVISIONS AFTER PROPOSAL

NOTEBOOKS

BOOK	PAGE	
BOOK	PAGE	
BOOK	PAGE	

EXISTING DETAIL	DATE	
PROPOSED DESIGN	DATE	
SHEET CHECKED	DATE	5-11-90
J. KIRGAN		
AS BUILT DETAILS	DATE	

FEDERAL PROJECT NO.	STATE PROJECT NO.	SHEET NO.	TOTAL SHEETS
F-012-2(32)	11139	5	48

SUMMARY OF QUANTITIES (ESTIMATED)

THIS INFORMATION IS FOR BIDDING PURPOSES ONLY

✳ NOT AN ITEM TOTAL

LOAM & SOD AREAS

ITEM NO.	641.04	648.0
ITEM	LOAM 4" DEEP	SOD
UNIT	S.Y.	S.Y.
LOCATION		
U.S. RTE. 4		
STA.155+50 LT.–160+50 LT.	290	
STA.155+50 RT.–157+00 RT.	181	181
STA.157+35 RT.–158+22 RT.	81	81
STA.158+50 RT.–160+50 RT.	99	99
STA.161+00 LT.–162+45 LT.	436	
STA.161+00 RT.–164+65 RT.	476	476
STA.162+55 LT.–166+00 LT.	741	
STA.164+80 RT.–165+72 RT.	99	99
STA.165+92 RT.–166+45 RT.	22	22
STA.167+15 RT.–167+50 RT.	6	8
SUB-TOTAL	✳ 2431	✳ 966

✳ TO LANDSCAPING AND SLOPE PROTECTION

EARTHWORK

ITEM NO.	ITEM	UNIT	
	COMMON EXCAVATION & BOULDERS IN SECTIONS	CY	4410
	BOULDERS ETC. IN SECTIONS (EST)	CY	10
	TOPSOIL EXCAVATION IN CUT SECTIONS (EST)	CY	1
	COMMON EXCAVATION IN SECTIONS	CY	4400
	TOPSOIL REMOVED BENEATH FILL SECTIONS (EST)	CY	2
	DRIVE AND APPROACH EXCAVATION (COMMON)	CY	106
	TOTAL COMMON EXCAVATION	CY	4508
203.1	COMMON EXCAVATION FOR ESTIMATE	CY	4750
	TOPSOIL REMOVED FOR USE AS LOAM OR HUMUS	CY	2
	COMMON EXCAVATION FOR FILL	CY	4676
	BOULDERS ETC. IN SECTIONS	CY	10
	TOTAL ROCK EXCAVATION	CY	10
203.2	ROCK EXCAVATION FOR ESTIMATE	CY	10
	BOULDERS, ETC.	CY	10
	ROCK STRUCTURE EXCAVATION (HEADWALLS)	CY	4
	ROCK FOR FILL	CY	14
	SECTIONS FILL	CY	534
	TOPSOIL REPLACEMENT (EST)	CY	2
	TOTAL FILL	CY	536
	ROCK FOR FILL (USE)	CY	14
	FILL BEFORE EXPANSION	CY	522
	EXPANDED FILL	CY	653
	COMMON EXCAVATION FOR FILL	CY	4676
	SURPLUS:	CY	4023
206.19	COMMON STRUCTURE EXCAVATION (FOR UTILITY EXPLORATION)	CY	25

RETAINING WALL & PEDESTRIAN RAMP

ITEM NO.	209	304.3	520.1	520.21	570.4	608.34
ITEM	GRANULAR BACKFILL	CRUSHED GRAVEL	CLASS "A" CONCRETE	CLASS "B" CONCRETE	MORTAR RUBBLE MASONRY	4" REINF. CONCRETE SIDEWALK
UNIT	CY	CY	CY	CY	CY	SY
LOCATION						
U.S. RTE 4						
STA.161+03 LT.–162+50 LT. (RAMP)	37		6			147
STA.161+03 LT.–161+71 LT. (WALL)	56	18		24	36	
STA.161+56 RT.						4.5
STA.162+56 RT.						4.5
SUB-TOTAL	▲ 93	■ 18	6	24	▲ 36	156
ROUNDING			4	6		19
TOTAL			10	30		175

▲ TO DRAINAGE SUMMARY
■ TO SURFACING MATERIALS SUMMARY

DRAINAGE

NOTE NO.	ITEM NO. / ITEM	206.1 COMMON STRUCT. EXCAV.	206.2 ROCK STRUCT. EXCAV.	209 GRANULAR BACKFILL	570.4 MORTAR RUBBLE MASONRY	585.3 STONE FILL, CLASS C	603 .00215 15" R.C. PIPE 2000D	603 .00218 18" R.C. PIPE 2000D	603 .00224 24" R.C. PIPE 2000D	604.124 CATCH BASIN TYPE B ACT.	604.124 CATCH BASIN TYPE B EST.	604 .125 CATCH BASIN TYPE B 5 DIA. ACT.	604 .125 CATCH BASIN TYPE B 5 DIA. EST.	604.15 CATCH BASIN TYPE E ACT.	604.15 CATCH BASIN TYPE E EST.	604.22 DROP INLET TYPE B ACT.	604.22 DROP INLET TYPE B EST.	605.906 6" PIPE UNDERDRAIN INCL. SPEC. EXCAV. AND BACKFILL	605.99 FURNISH & INSTALL 6" PIPE UNDERDRAIN	SUBSIDIARY 45 DEG. BENDS FOR 6" UNDERDRAIN	SUBSIDIARY Y BENDS FOR 6" UNDERDRAIN	REMARKS
	UNIT	CY	CY	CY	CY	CY	LF	LF	LF	UNIT	UNIT	UNIT	UNIT	UNIT	UNIT	UNIT	UNIT	LF	LF			
	LOCATION																					
	U.S. RTE. 4																					
1	STA.156+69 RT.33'																					
1A	STA.156+69 RT. 38						9			1	1											SUBDID. TO ITEM 603.00215
1B	STA.156+69 LT.28'	7			2		4															
2	STA.160+44 RT.23'																					REMOVE EXIST. MRM HEADWALL
3	STA.160+44 LT.–160+44 RT.						42									1	1					
4	STA.160+44 LT.23'									1	1											
5	STA.160+44 LT.–161+75 LT.						127															
6	STA.161+75 RT.23'															1	1					
7	STA.161+75 LT.23'									1	1											
8	STA.161+75 RT.–162+00 RT.						21															
9	STA.161+75 LT.–162+00 LT.						21															
10	STA.162+00 RT.23'									1	1											
11	STA.162+00 RT–162+00 LT.						42															
12	STA.162+00 LT.23'									1	1											
13	STA.162+00 LT.–162+25 LT.						30															
14	STA.162+25 LT.46'													1	1							
15	STA.162+25 LT.–162+43 LT.			7				20														
16	STA.162+43 LT.61'									1	1											
17	STA.162+43 LT.–162+63 LT.			8				22														
18	STA.162+63 LT.77'											1	1									
19	STA.162+63 LT–162+71 LT.			21					53													
19A	STA.162+71 LT.133'	4				5																
20	STA.162+69 LT.–162+63 LT.			9				24														CONST. CLASS "C" OUTLET PROTECTION
21	STA.162+69 LT.51'									1	1											
22	STA.162+75 LT.–162+69 LT.						26															
23	STA.162+75 RT.32'															1	1					
24	STA.162+75 RT.–162+75 RT.						5															
25	STA.162+75 RT.23'									1	1											
26	STA.162+75 RT.–162+75 LT.						42															
27	STA.162+75 LT.23'									1	1											
28	STA.162+75 RT.–164+85 RT.						204															
29	STA.164+85 RT.23'															1	1					
30	STA.162+63 RT.–LT.																					REMOVE EXIST. DRAINAGE STRUCTURES
																						SUBSID. TO TUNNEL EXCAVATION
31	STA.161+03 LT.–161+75 LT.																		80			CONST. 80'X 6" UNDERDRAIN
32	STA.161+03 LT.–162+43 LT.																	150				CONST. 150'X 6" UNDERDRAIN
33	STA.162+43 LT.–162+50 LT.																	35				CONST. 35'X 6" UNDERDRAIN
34	STA.162+43 LT.–162+55 LT.																	40				CONST. 40'X 6" UNDERDRAIN
	STA.161+03 LT.–161+71 LT.			▲ 93	▲ 36																	MRM RETAINING WALL
	ADDITIONAL FOR FITTINGS (LF)																	21		6	1	
	SUB-TOTAL	11		138	38	5	573	66	53	9	9	1	1	1	1	4	4	246	80	6	1	
	ROUNDING	4	4	12	2	5	27	9	7	0	0	0	0	0	0	0	0	14	10			
	ESTIMATED		1																			
	TOTAL	15	5	150	40	10	600	75	60	9	9	1	1	1	1	4	4	260	90	6	1	

▲ FROM RETAINING WALL SUMMARY

FEDERAL PROJECT NO.	STATE PROJECT NO.	SHEET NO.	TOTAL SHEETS
F-012-2(32)	11139	6	48

REVISIONS AFTER PROPOSAL — DESCRIPTION | STATION | DATE | NUMBER

NOTEBOOKS — BOOK PAGE | BOOK PAGE | BOOK PAGE

EXISTING DETAIL — DATE 5-11-90
PROPOSED DETAIL — DATE
SHEET DESIGN — DATE 5-11-90
SHEET CHECKED — DATE
AS BUILT DETAILS — DATE

D. PATTEN
J. KIRCHAC

BRUNING 44-242 75734

SUMMARY OF QUANTITIES (ESTIMATED)

THIS INFORMATION IS FOR BIDDING PURPOSES ONLY

* NOT AN ITEM TOTAL

GUARD RAIL & FENCE

ITEM NO.	606.140	606.143	606.146	606.514	607.662	607.669	670.091
ITEM	BEAM GUARD RAIL (STANDARD SECTION) GR-140	BEAM GUARD RAIL INCLUDING TERM. SECT. GR-143	BEAM GUARD RAIL (TERMINAL UNIT, TYPE F GR-146	WOOD GUARD RAIL	CHAIN LINK FENCE WITH ALUM. COATED FABRIC (6' HIGH)	POST ASSEMBLIES FOR CHAIN LINK FENCE	HANDICAP HAND RAIL
UNIT	LIN FT	LIN FT	U	LIN FT	LIN FT	EACH	LIN FT
LOCATION							
U.S. RTE. 4							
STA.158+24 LT.43'-160+48 LT.35'					224	3	
STA.161+00 LT.-161+12 LT.		25					
STA.161+03 LT.-161+54 LT.				50			
STA.161+03 LT.-162+50 LT.							149
STA.161+12 LT.-164+00 LT.	288						
STA.164+00 LT.-164+75 LT.			1				
SUB-TOTAL	288	25	1	50	224	3	149
ROUNDING	12	5	0	10	16	0	11
TOTAL	300	30	1	60	240	3	160

FORCE ACCOUNT

BY PSNH---STREET LIGHTING

BY STATE OF N.H.--- PAVEMENT MARKING, SIGNING, & SIGNALS

LANDSCAPING & SLOPE PROTECTION

ITEM NO.	641.04	642.0	643.12	644.15	645.11	645.51	648.0
ITEM	LOAM 4" DEEP	LIMESTONE	FERTILIZER FOR INITIAL APPLICATION	PARK SEED TYPE 15	MULCH	HAY BALES FOR TEMP EROSION CONTROL	SOD
UNIT	SY	TON	TON	LB	AC	EACH	SY
LOCATION							
U.S. RTE. 4							
LANDSCAPING	*2431.00	1	0.22	25.00	0.30	50	966
SUB-TOTAL	2431	1	0.22	25	0.30	50	966
ROUNDING	169	0.25	0.03	5.00	0.05	0	34
TOTAL	2600	1.25	0.25	30	0.35	50	1000

*FROM LOAM & SOD SUMMARY

INCIDENTAL ITEMS

ITEM NO.	PARTICIPATING ITEMS	UNIT	TOTAL
214	FINE GRADING	UNIT	1
595.3	BIAXIAL GEOGRID	SY	200
606.417	PORTABLE CONCRETE BARRIER FOR TRAFFIC CONTROL	LF	400
618.6	UNIFORMED OFFICERS	HOUR	250
618.7	FLAGGERS	HOUR	1000
619.1	MAINTENANCE OF TRAFFIC INCL DUST LAYING	UNIT	1
619.51	TEMPORARY PAVEMENT MARKING TAPE-WHITE	LF	5500
619.52	TEMPORARY PAVEMENT MARKING TAPE-YELLOW	LF	5500
621.21	REFLECTORIZED BEAM GUARD RAIL DELINEATOR (WHITE)	EA	6
621.31	SINGLE DELINEATOR WHITH POST (WHITE)	EA	15
622.1	STEEL WITNESS MARKERS	EA	3
628.2	SAWED BITUMINOUS CONC. PAVEMENT	LF	100
632.9	REMOVING EXISTING PAVEMENT MARKING	LF	5500
632.99	TEMP. REFLECTORIZED PAINT PAVEMENT MARKING, WHITE OR YELLOW	LF	5500
670.066	MAILBOX POST ASSEMBLY	EA	2
692	MOBILIZATION	UNIT	1
698.11	FIELD OFFICES (MODIFIED)	EA	1
699	TEMPORARY PROJECT WATER POLLUTION CONTROL	$	1
1008.1	ALTERATIONS AND ADDITIONS AS NEEDED-TEMPORARY LIGHTING	$	1
1008.2	ALTERATIONS AND ADDITIONS AS NEEDED-RELOCATE HISTORIC MARKER	$	1

CONSTRUCTION SIGNS & WARNING DEVICES

MINIMUM REQUIREMENTS)

ITEM NO. 619.2 TOTAL 1 UNIT

	DESCRIPTION	SIZE	SQ. FT.	NO. REQ.	TOTAL AREA	POSTS	EASELS	REMARKS
G20-2	End Construction	2X5	10	2	20	4		
W1-8	Chevron	2x2.5	5	12	60	12		
W1-1	Bump	4X4	16	2	32		2	
W8-3	Pavement Ends	4x4	16	2	32		2	
W20-1a	Road (Bridge) Construction Ahead	4x4	16	2	32	4		
W20-1c	Road (Bridge) Construction 1000 Ft.	4x4	16	2	32	4		
W20-1e	Road (Bridge) Construction 1/2 Mile	4x4	16	2	32	4		
W20-4a	One Lane Road Ahead	4x4	16	2	32		2	
W20-7a	Flagger Ahead	4x4	16	2	32		2	
W20-9	Be Prepared To Stop	4x4	16	2	32		2	
WS-1	Road Narrows	4x4	16	2	32		2	
	BARRICADES:							
	Type II			30				
	WARNING LIGHTS:							
	Type A (Flashing)			6				
	DELINEATORS:							
	VP-1 (8"X24")			30				
	D-100 (3"X6")							
	TRAFFIC CONES:							
	28" ORANGE			50				
	ARROW BOARDS:							
	Dietz Or equal							
	SIGN PADDLES:			2				
	BARRELS:							
	Plastic			25				

*NOTE: ALL SIGNING MOUNTED ON POSTS SHALL BE CONSIDERED PERMANENT CONTROLS
ALL CONSTRUCTION SIGNS WHETHER PERMANENT CONTROLS OR OPERATIONAL CONTROLS,
SHALL BE NEW AND SHALL BE COVERED WITH HIGH INTENSITY REFLECTIVE SHEETING

CURBING

ITEM NO.			609.01	609.21	609.22
ITEM			STRAIGHT GRANITE CURB A	STRAIGHT GRAN. SLOPE CURB	STRAIGHT GRAN. SLOPE CURB WITH RAD. JOINTS
UNIT	MARK #	RADIUS	LIN FT	LIN FT	LIN FT
LOCATION					
U.S. RTE.4					
STA.157+79 LT.-157+96 LT.	C1	35		20	
STA.157+96 LT.-160+43 LT.	C2			247	
STA.160+43 LT.-160+53 LT.	C3	5			8
STA.160+95 LT.-161+08 LT.	C4	15			15
STA.161+08 LT.-162+00 LT.	C5			92	
STA.162+00 LT.-162+45 LT.	C6			45	
STA.162+45 LT.-162+56 LT.	C7			11	
STA.162+56 LT.-165+95 LT.	C8			339	
STA.165+95 LT.-166+07 LT.	C9	15			12
STA.158+53 RT.-158+58 RT.	D1	5			8
STA.158+58 RT.-160+50 RT.	D2			192	
STA.160+50 RT.-160+55 RT.	D3	5			6
STA.161+05 RT.-161+09 RT.	D4	5			8
STA.161+09 RT.-162+00 RT.	D5			91	
STA.162+00 RT.-164+53 RT.	D6			253	
STA.164+53 RT.-164+62 RT.	D7	10			10
STA.164+78 RT.-164+84 RT.	D8	5			8
STA.164+84 RT.-165+57 RT.	D9			73	
STA.165+57 RT.-165+62 RT.	D10	20			12
STA.165+93 RT.-165+99 RT.	D11	5			10
STA.165+99 RT.-166+88 RT.	D12			89	
STA.166+88 RT.-166+93 RT.	D13	5			8
STA.167+13 RT.-167+23 RT.	D14	20		11	
STA.167+23 RT.-167+50 RT.	D15			27	
STA.167+52 RT.	D16	5			8
STA.167+68 RT.	D17	5			8
STA.167+70 RT.-168+00 RT.	D18			30	
STA.168+00 RT.-168+10 RT.	D19			10	
STA.168+10 RT.	D20	5			8
STA.161+05 RT.-161+53 RT.	E1	50		70	
STA.161+63 RT.-162+00 RT.	E2		37		
STA.162+00 RT.-162+46 RT.	E3		46		
STA.162+55 RT.-162+62 RT.	E4			7	
STA.162+62 RT.-162+83 RT.	E5	35		22	
SUB-TOTAL			83	1829	129
ROUNDING			7	71	11
TOTAL			90	1700	140

SURFACING MATERIALS

ITEM NO.	304.1	304.2	304.3	403.11	403.12	403.98	403.99	417.0
ITEM	SAND	GRAVEL	CRUSHED GRAVEL	HOT BITUMINOUS PAVEMENT, MACHINE METHOD	HOT BITUMINOUS PAVEMENT, HAND METHOD	HOT BITUMINOUS CONCRETE LEVELING COURSE	TEMPORARY BITUMINOUS PAVEMENT	COLD PLANING OF BITUMINOUS SURFACES
UNIT	CY	CY	CY	TON	TON	TON	TON	LF
LOCATION								
N.H. RTE. 4	1336	1268	1268	1242	50	100		250
STA.161+03 LT.-161+71 LT. (MRM RETAINING WALL)			■ 18					
PEDESTRIAN RAMP	65							
ASPHALT SIDEWALK (TEMPORARY WIDENING)	37		31		8			
							150	
SUB-TOTAL	1438	1268	1317	1242	58	100	150	250
ROUNDING	112	82	83	58	17	50	0	25
TOTAL	1550	1350	1400	1300	75	150	150	275

■ FROM RETAINING WALL SUMMARY

REVISIONS AFTER PROPOSAL

NUMBER	DATE	STATION	DESCRIPTION

NOTEBOOKS: BOOK PAGE; BOOK PAGE; BOOK PAGE

EXISTING DETAIL — PROPOSED DESIGN — SHEET CHECKED — AS BUILT DETAILS

D. PATTEN DATE 5-11-90

J. KIRBLAC DATE 5-11-90

DATE

BRUNING 44-242 75/34

FEDERAL PROJECT NO.	STATE PROJECT NO.	SHEET NO.	TOTAL SHEETS
F-012-2(32)	11139	7	48

TYPICAL SECTIONS OF IMPROVEMENT

ATTENTION PROJECT ENGINEER

IT IS INTENDED THAT A PAVEMENT MATCH BE OBTAINED WITH THE EXISTING ROADWAY SURFACE ON EACH END OF THE PROJECT: STA. 155+50 & STA. 168+20.

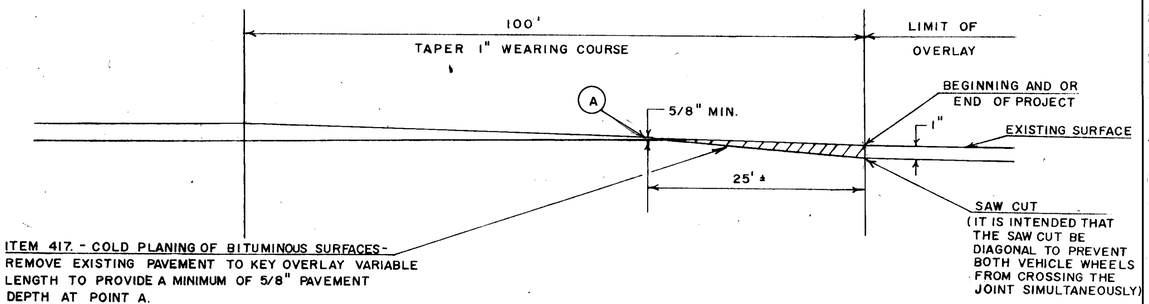

ITEM 417. - COLD PLANING OF BITUMINOUS SURFACES - REMOVE EXISTING PAVEMENT TO KEY OVERLAY VARIABLE LENGTH TO PROVIDE A MINIMUM OF 5/8" PAVEMENT DEPTH AT POINT A.

NOTE: THE LENGTH OF THE TAPER MAY BE ADJUSTED AS ORDERED TO PROVIDE FOR VARYING FIELD CONDITIONS OR CHANGES IN SINGLE COURSE DEPTH.

PAVEMENT MATCH TYPICAL

NOT TO SCALE

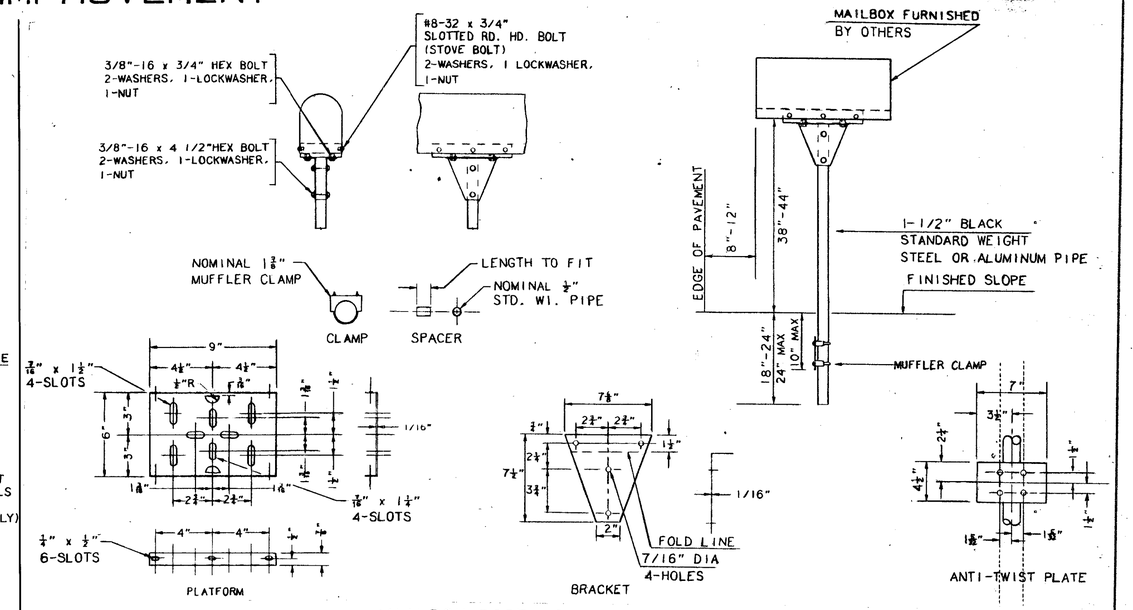

MAILBOX POST ASSEMBLY ITEM 670.066

(FOR ADDITIONAL INFORMATION SEE THE SPECIAL PROVISION)

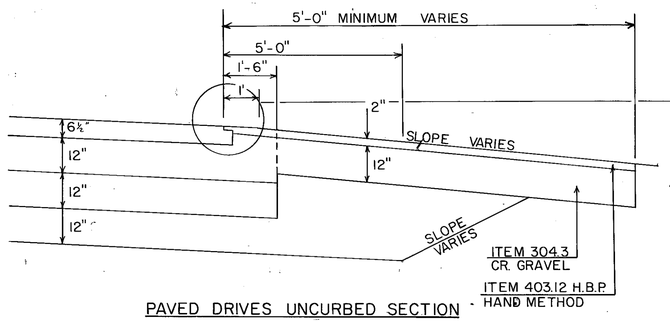

PAVED DRIVES UNCURBED SECTION

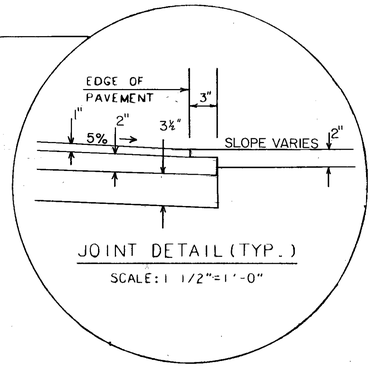

JOINT DETAIL (TYP.)

SCALE: 1 1/2" = 1'-0"

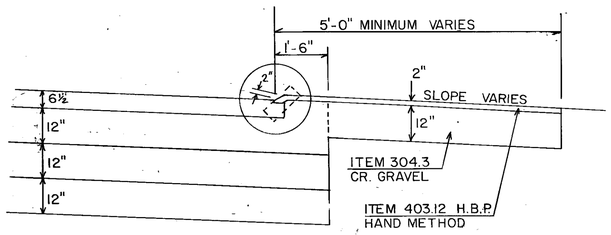

PAVED DRIVES CURBED SECTION

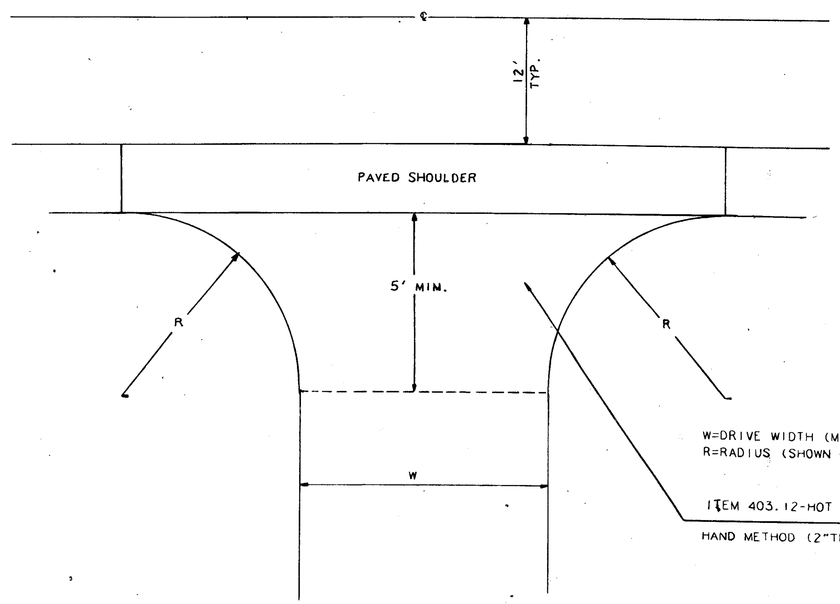

DRIVEWAY APRONS

NO SCALE

NUMBER	DATE	STATION	DESCRIPTION

REVISIONS AFTER PROPOSAL

NOTEBOOKS: BOOK PAGE; BOOK PAGE; BOOK PAGE

EXISTING SURFACE — DATE

PROPOSED DESIGN — DATE

SHEET CHECKED — DATE 5-11-90 — J. KIRONAC

AS BUILT DETAILS — DATE

FEDERAL PROJECT NO.	STATE PROJECT NO.	SHEET NO.	TOTAL SHEETS
F-012-2(32)	11139	8	48

TYPICAL SECTIONS OF IMPROVEMENT

ATTENTION PROJECT ENGINEER

IT IS INTENDED THAT A PAVEMENT MATCH BE OBTAINED WITH THE EXISTING ROADWAY SURFACE ON EACH END OF THE PROJECT: STA. 11+50, STA. 22+00, STA. 1498+60, STA. 48+00, AND STA. 36+50.

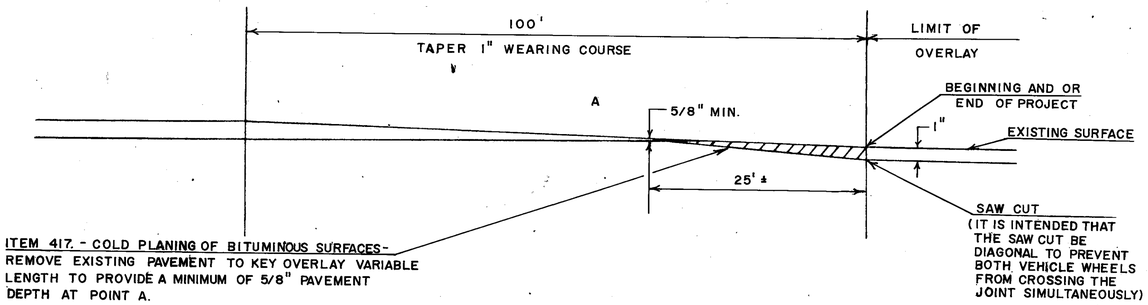

NOTE: THE LENGTH OF THE TAPER MAY BE ADJUSTED AS ORDERED TO PROVIDE FOR VARYING FIELD CONDITIONS OR CHANGES IN SINGLE COURSE DEPTH.

PAVEMENT MATCH TYPICAL

NOT TO SCALE

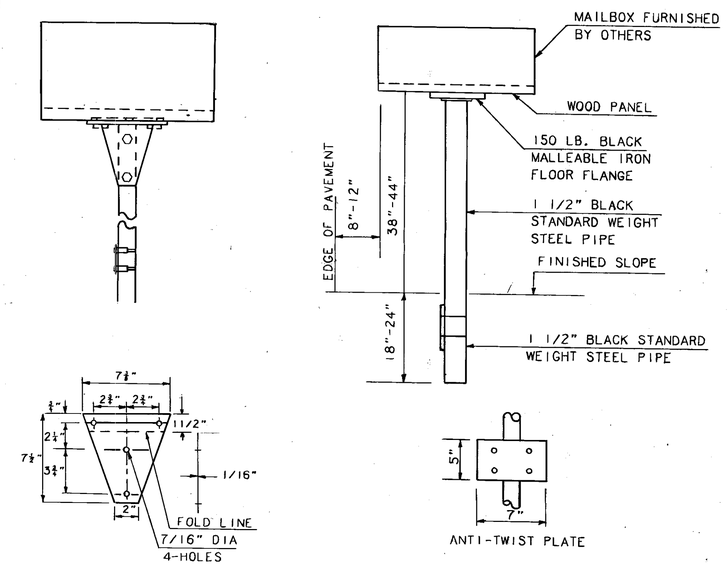

OPTIONAL BRACKET

MAILBOX POST ASSEMBLY-ITEM 670.066

(FOR ADDITIONAL INFORMATION, SEE THE SPECIAL PROVISION)

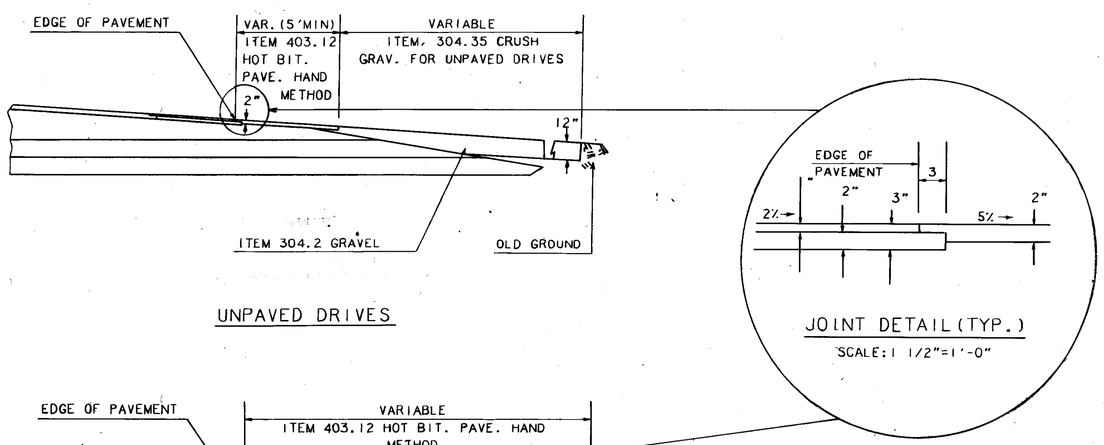

UNPAVED DRIVES

JOINT DETAIL (TYP.)

SCALE: 1 1/2"=1'-0"

PAVED DRIVES

NOTE: THE CONTRACTOR IS ADVISED THAT ON THIS PROJECT THE EXISTING PAVEMENT IS SUITABLE FOR RECYCLING TO USE IN BASE COURSES AND BINDER COURSE OF PAVEMENT. WEARING COURSE WILL BE NEW PAVEMENT.

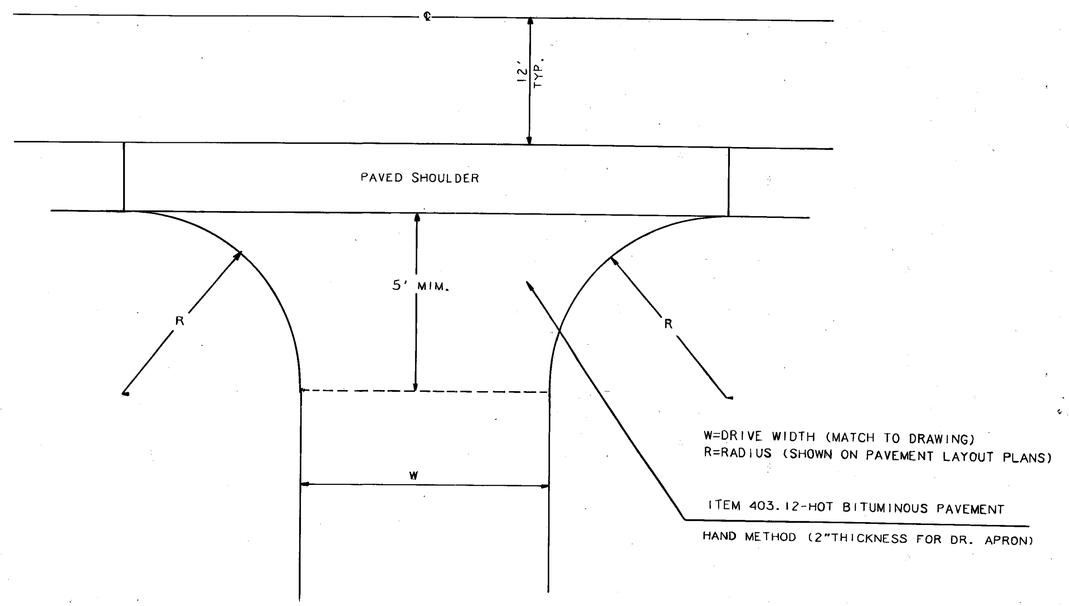

DRIVEWAY APRONS

NO SCALE

REVISIONS AFTER PROPOSAL			
NUMBER	DATE	STATION	STATION	DESCRIPTION

NOTEBOOKS: BOOK PAGE; BOOK PAGE; BOOK PAGE

EXISTING DETAIL — DATE
PROPOSED DESIGN — DATE
SHEET CHECKED — DATE
AS BUILT DETAILS — DATE

FEDERAL PROJECT NO.	STATE PROJECT NO.	SHEET NO.	TOTAL SHEETS
F-012-2(32)	11139		

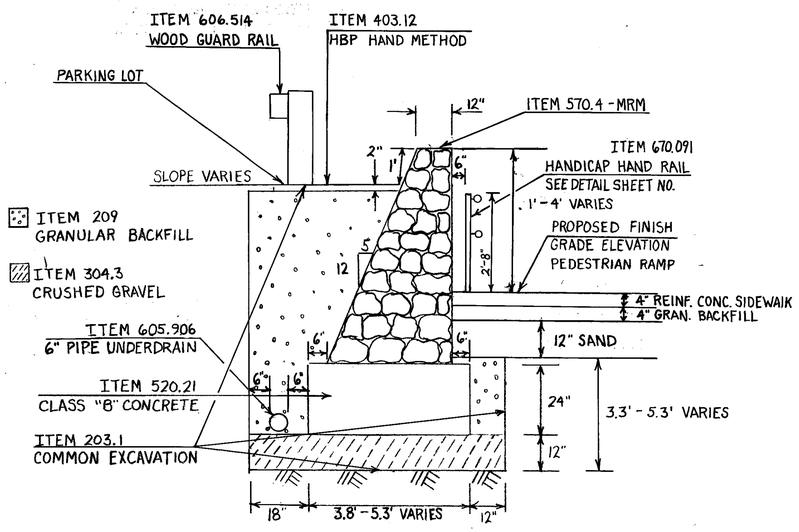

MORTAR RUBBLE MASONRY WALL
(NO SCALE)

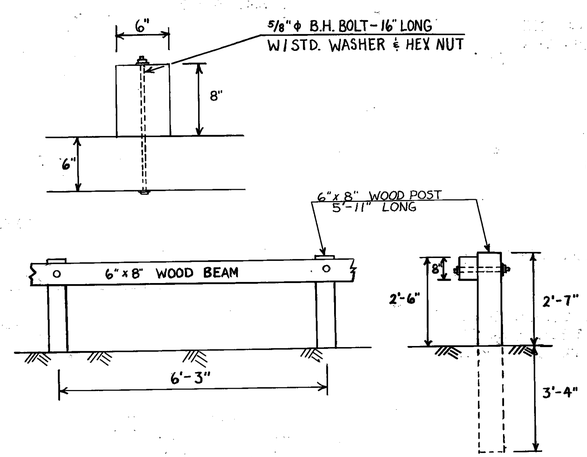

ITEM 606.514
WOOD GUARD RAIL
STA. 161+03 LT. - 161+54 LT.

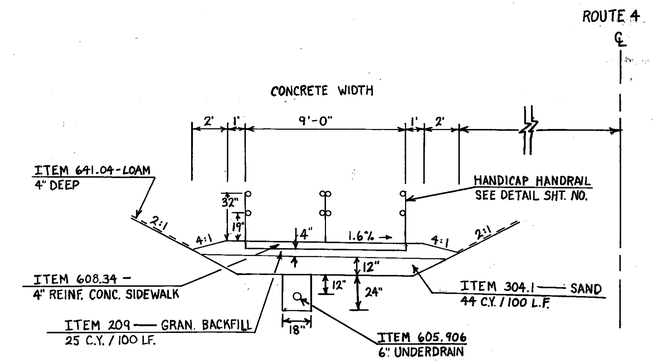

CONCRETE PEDESTRIAN RAMP

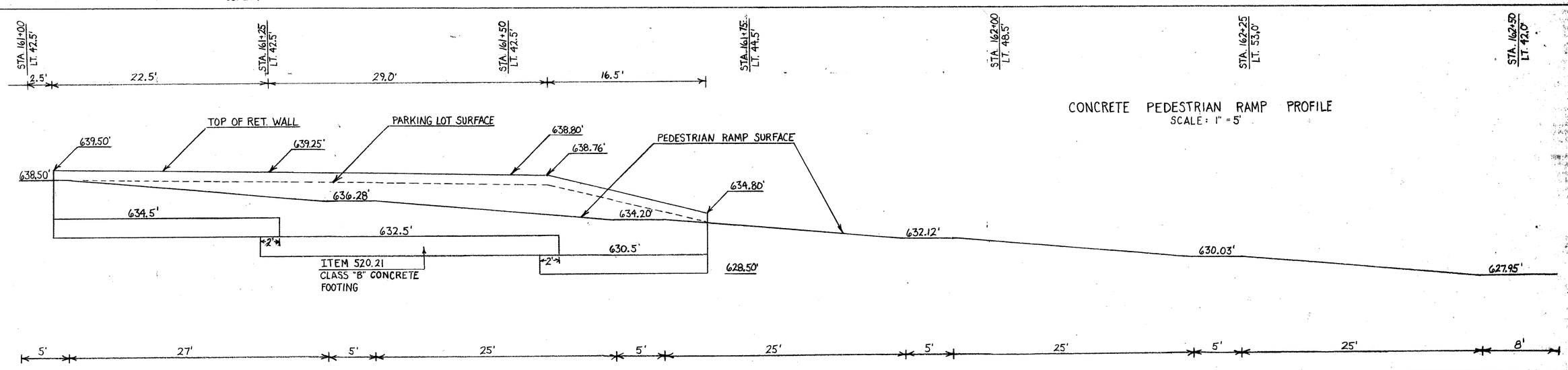

CONCRETE PEDESTRIAN RAMP PROFILE
SCALE: 1" = 5'

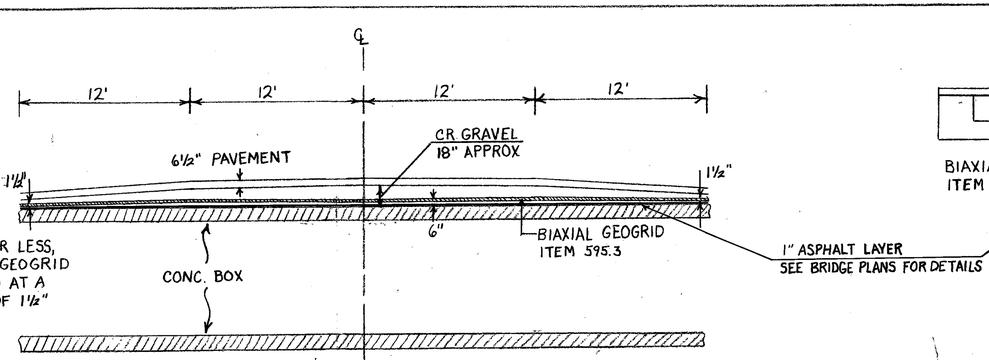

NOTE: IN AREAS OF 12", OR LESS, OF CR. GRAV. THE GEOGRID IS TO BE PLACED AT A MINIMUM DEPTH OF 1½" ABOVE THE BOX.

PEDESTRIAN UNDERPASS TYP. SECTION
SCALE: 1" = 50'

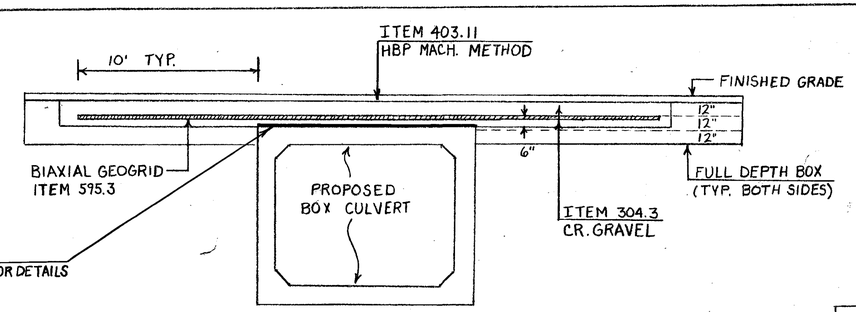

PEDESTRIAN UNDERPASS X-SECT.
(NO SCALE)

MISCELLANEOUS DETAILS

FEDERAL PROJECT NO.	STATE PROJECT NO.	SHEET NO.	TOTAL SHEETS
F-012-2(32)	11139	9	48

REVISIONS AFTER PROPOSAL

NUMBER	DATE	STATION	STATION	DESCRIPTION

NOTEBOOKS

BOOK	PAGE
BOOK	PAGE
BOOK	PAGE

		DATE
EXISTING DETAIL		
PROPOSED DESIGN		
SHEET CHECKED	J. Kirkham	5-11-90
AS BUILT DETAILS		

BRUNING 44-242 75734

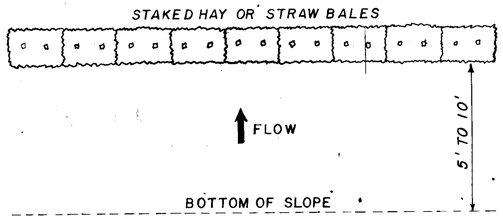

NOTE: NORMAL USE AT BOTTOM OF FILL SLOPE

EROSION PROTECTION TYPE • A

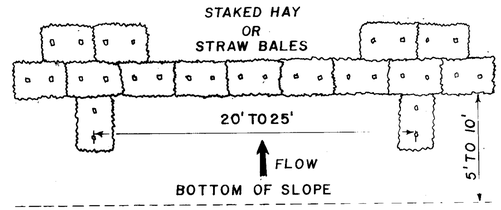

NOTE: NORMAL USE AT BOTTOM OF FILL SLOPE WHERE HEAVY FLOW MAY BE ANTICIPATED.

EROSION PROTECTION TYPE • B

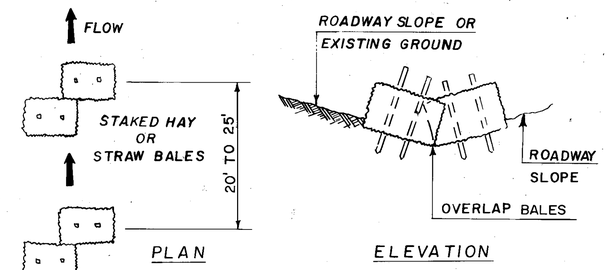

NOTE: NORMAL USE IN NARROW DITCH SECTION

EROSION PROTECTION TYPE • C

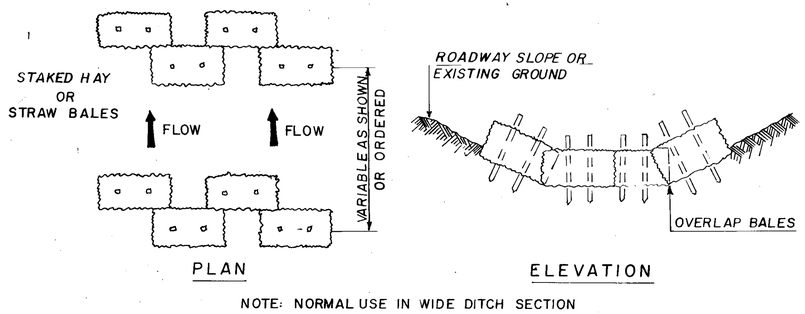

NOTE: NORMAL USE IN WIDE DITCH SECTION

EROSION PROTECTION TYPE • D

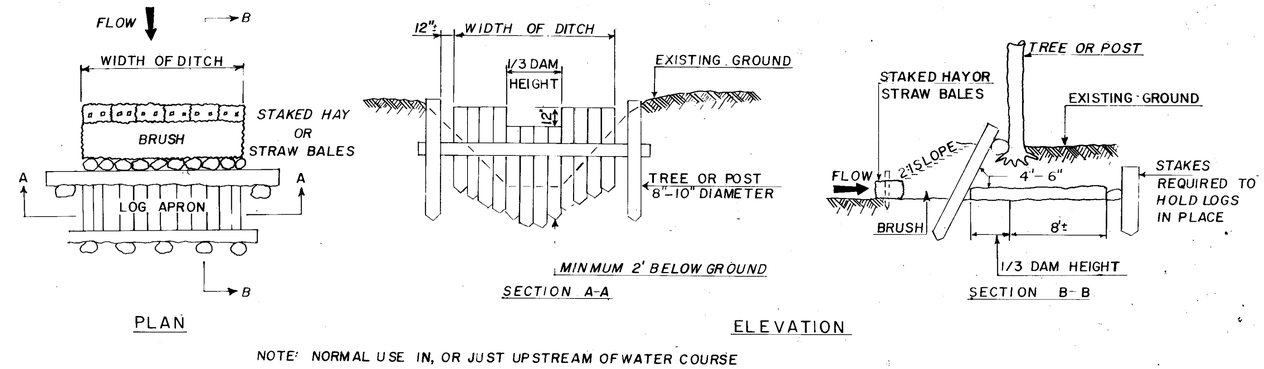

NOTE: NORMAL USE IN, OR JUST UPSTREAM OF WATER COURSE

EROSION PROTECTION TYPE • E

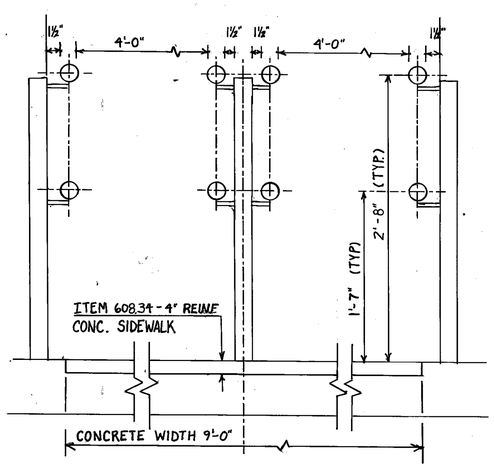

HANDICAP HAND RAIL DETAIL
ITEM 670.091

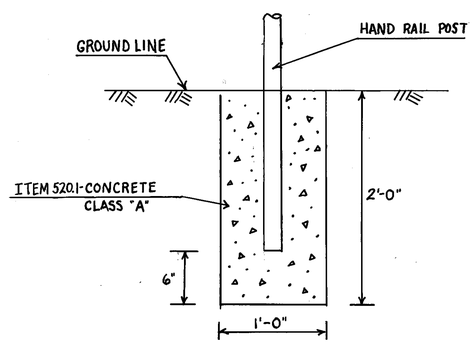

FOOTING DETAIL FOR HANDICAP HAND RAIL

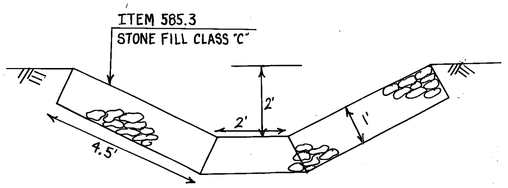

OUTLET DITCH PROTECTION DETAIL
STA. 162+71 LT. 133'

GENERAL NOTES

1. BALED HAY AND STRAW WILL BE PAID UNDER ITEM 645.51
2. STAKES TO HOLD BALES SHALL BE 2" BY 2" OR EQUIVALENT SAPLINGS AND SHALL BE LONG ENOUGH TO EXTEND 1 FOOT MINIMUM INTO THE GROUND. STAKE, LOGS, AND BRUSH WILL BE SUBSIDIARY
3. BALES SHALL BE SET 3± INCHES BELOW GROUND SURFACE OR AS ORDERED. ANY REQUIRED EXCAVATION TO SET BALES WILL BE SUBSIDIARY.
4. HAY BALES WILL BE ALLOWED TO ROT IN PLACE EXCEPT IN HIGHLY VISIBLE AREAS WHERE THE ENGINEER MAY ORDER REMOVAL AS SUBSIDIARY WORK

STATE OF NEW HAMPSHIRE
DEPARTMENT OF PUBLIC WORKS AND HIGHWAYS • HIGHWAY DESIGN DIVISION

TEMPORARY EROSION CONTROL MEASURES

FEDERAL PROJECT NO.	STATE PROJECT NO.	SHEET NO.	TOTAL SHEETS
F-012-2(32)	11139	10	48

REVISIONS AFTER PROPOSAL

NUMBER	DATE	STATION	STATION	DESCRIPTION

NOTEBOOKS
BOOK PAGE
BOOK PAGE
BOOK PAGE

EXISTING DETAIL DATE
PROPOSED DESIGN DATE
SHEET CHECKED J. KIRONAC DATE 5-11-90
AS BUILT DETAILS DATE

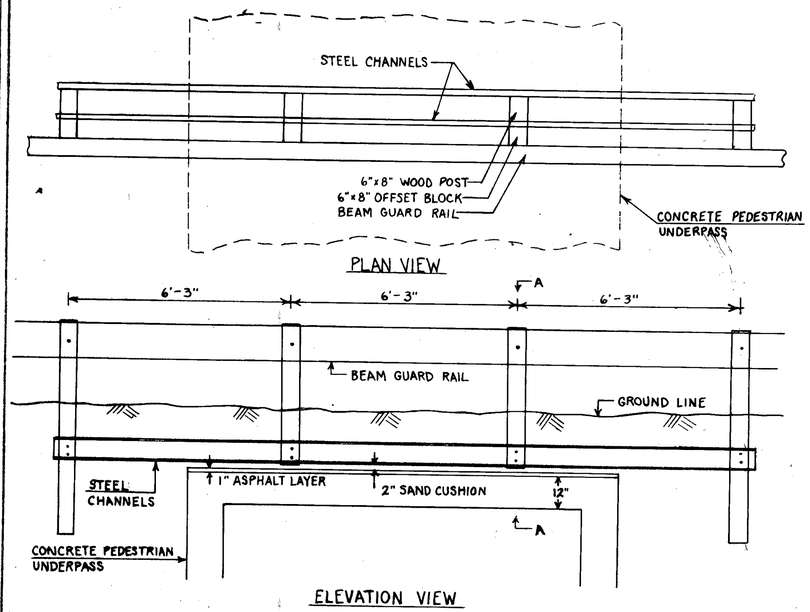

NOTES

- MC 8x8.5 CHANNELS 20' LONG ON EACH SIDE OF POSTS.
- CHANNELS SHALL BE GALVANIZED A36 STEEL.
- ATTACH CHANNELS TO POSTS WITH 2-3/4" ϕ x 10" LONG A325 GALVANIZED H.S. BOLTS IN 13/16" ϕ HOLES (TYP.) WITH STANDARD WASHERS AND HEX-NUTS.
- POSTS SHALL BE CAREFULLY PLACED IN EXCAVATED HOLES WITH THE BOTTOM OF THE POSTS SET ON A 2" SAND CUSHION OVER THE TOP OF THE UNDERPASS.
- STRUCTURAL STEEL SHALL COMPLY WITH THE SPECIFICATIONS OF ITEM 565. COSTS FOR STEEL SHALL BE SUBSIDIARY TO ITEM 606.140

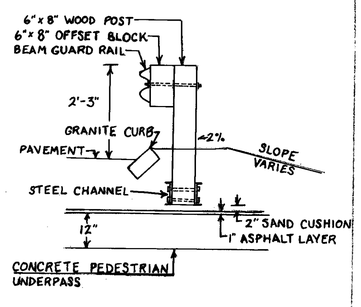

SECTION A-A

GUARD RAIL DETAIL FOR INSTALLATION OVER PEDESTRIAN UNDERPASS

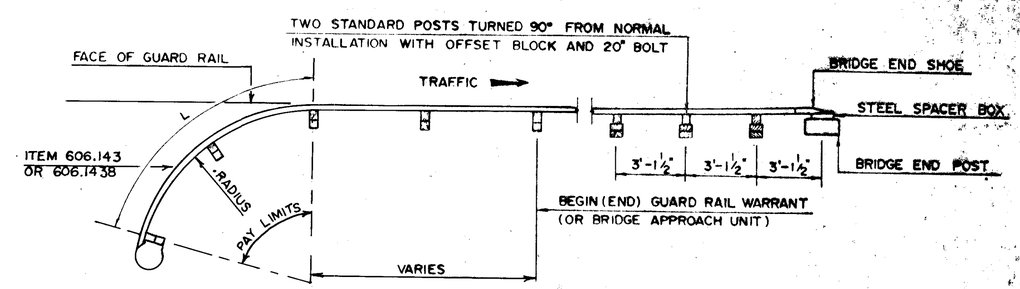

NOTE: RADIUS AS SHOWN ON PLAN. SPECIFY SHOP BENDING FOR 150' RADIUS OR LESS.

PLAN

TERMINAL UNIT (SPECIAL TREATMENT)

ITEM NO. 606.1438 BEAM GUARD RAIL INCLUDING TERMINAL SECTION (POST SPACING 3'-1½" CENTERS)

ITEM NO. 606.143 BEAM GUARD RAIL INCLUDING TERMINAL SECTION (POST SPACING 6'-3" CENTERS)

PAID LINEAR FEET

USE AT BEGINNING OR END OF SECTION FOR WARRANTED GUARD RAIL OR AS DIRECTED BY THE ENGINEER.

ITEM NO. 606.86 TYPE J ANCHORAGES FOR BEAM GUARD RAIL (SEE SPECIAL DETAILS BELOW).

L GREATER THAN 50' USE LOCATION A

L LESS THAN 50' USE LOCATION B

PAID EACH

USE AS DIRECTED BY THE ENGINEER.

NOTE IT IS THE INTENT OF THIS DETAIL TO INDICATE THAT THE EXPOSED END OF RAIL BE TURNED AWAY FROM ONCOMING TRAFFIC.

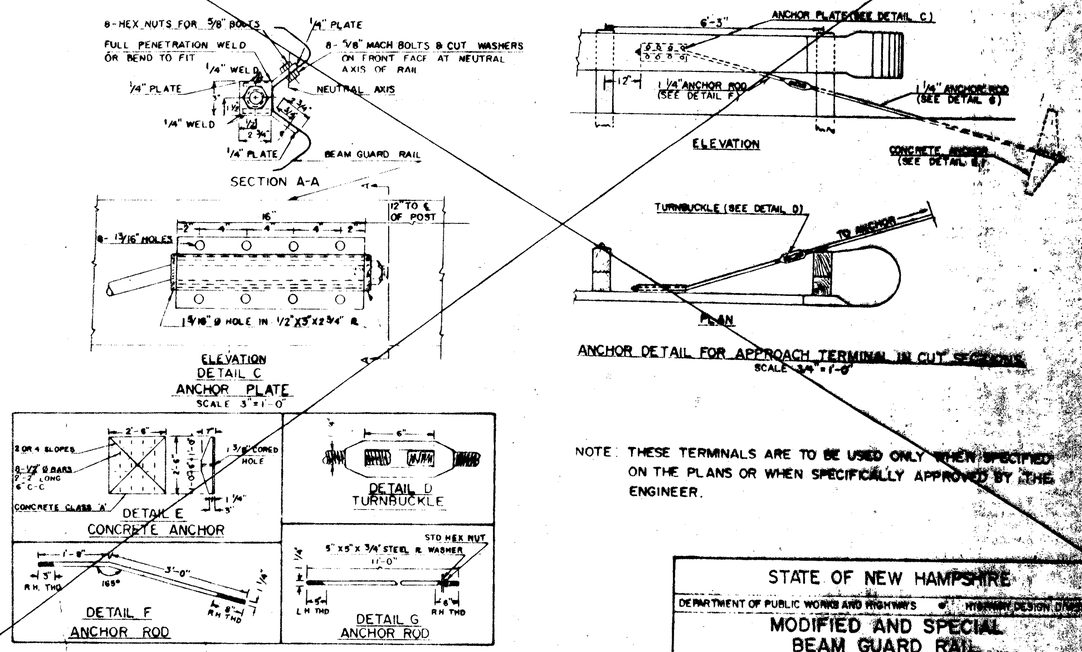

NOTE: THESE TERMINALS ARE TO BE USED ONLY WHEN SPECIFIED ON THE PLANS OR WHEN SPECIFICALLY APPROVED BY THE ENGINEER.

NOTE: THE FOLLOWING OPTIONS MAY BE USED.

1. DRIVE POST AND EXCAVATE SUFFICIENTLY TO DRILL BOTH HOLES.
2. PRE-DRILLED POST. HAND DIG TO INSTALL POST.

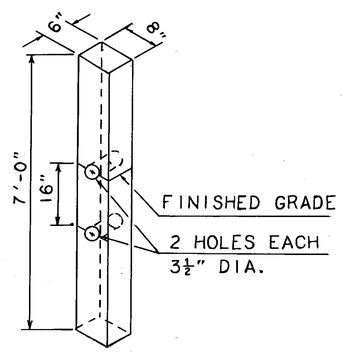

FOR FIRST FIVE POSTS (FROM ANCHOR) IN "F" TERMINAL, AND FIRST TWO POSTS (FROM ANCHOR) IN MODIFIED "F" TERMINAL.

WOOD POST MODIFICATION

STATE OF NEW HAMPSHIRE

DEPARTMENT OF PUBLIC WORKS AND HIGHWAYS — HIGHWAY DESIGN DIVISION

MODIFIED AND SPECIAL BEAM GUARD RAIL TERMINALS

FEDERAL PROJECT NO.	STATE PROJECT NO.	SHEET NO.	TOTAL SHEETS
F-012-2(32)	11139	[illegible]	[illegible]

NUMBER	DATE	DESCRIPTION	STATION	STATION

REVISIONS AFTER PROPOSAL

NOTEBOOKS: BOOK PAGE; BOOK PAGE; BOOK PAGE

EXISTING DETAIL — DATE
PROPOSED DESIGN — DATE
SHEET CHECKED J. Kilbourne — DATE 5-11-92
AS BUILT DETAILS — DATE

BRUNING 40-5020 74879

REVISIONS AFTER PROPOSAL			
DESCRIPTION	STATION	STATION	DATE

NOTEBOOKS		
BOOK	PAGE	
BOOK	PAGE	
BOOK	PAGE	

NUMBER	DATE

EXISTING DETAIL		DATE
PROPOSED DESIGN		DATE
SHEET CHECKED	KIRONAC	DATE 5-11-92
AS BUILT DETAILS		DATE

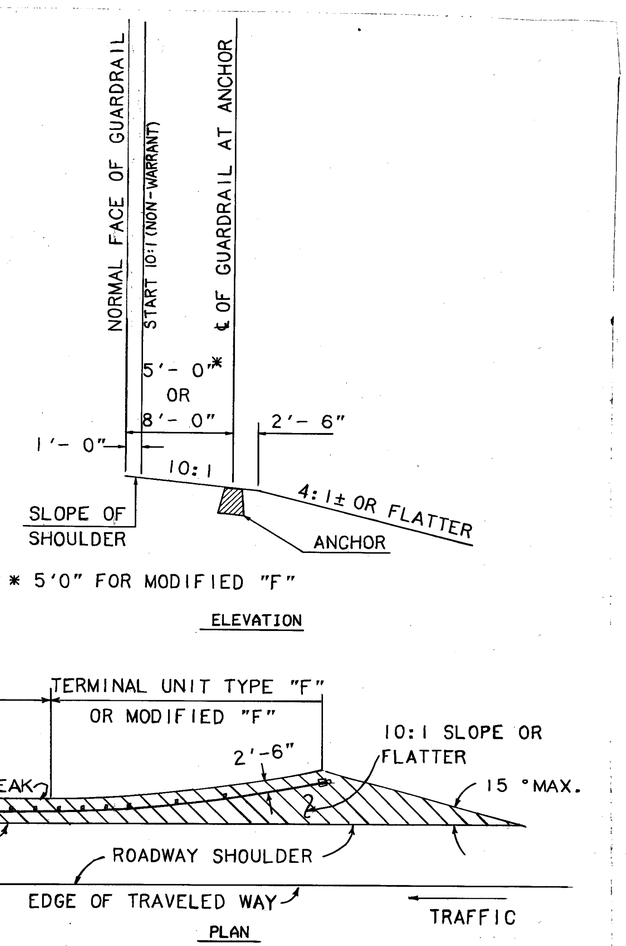

TYPICAL SLOPE AT BEAM GUARDRAIL

TERMINAL "F" & MODIFIED "F" ANCHOR

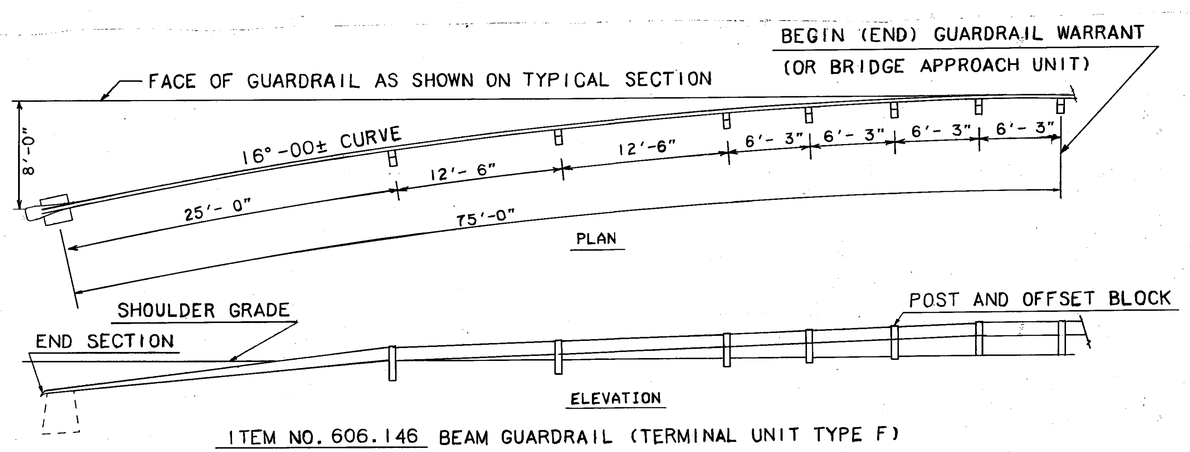

ITEM NO. 606.146 BEAM GUARDRAIL (TERMINAL UNIT TYPE F)

PAID: LUMP SUM, INCLUDING END SECTION AND ANCHOR

USE: AT BEGINNING OR END OF SECTION FOR WARRANTED GUARDRAIL WHEN TERMINATING IN FILL SECTION OR AN EXCAVATION SECTION WITH A 4:1 BACKSLOPE. (DO NOT USE WITHIN WARRANT LIMITS)

TERMINAL UNIT TYPE F

BEAM GUARDRAIL

TERMINAL UNITS TYPE F & TYPE F MODIFIED

FEDERAL PROJECT NO.	STATE PROJECT NO.	SHEET NO.	TOTAL SHEETS
F-012-2(32)	11139	12	48

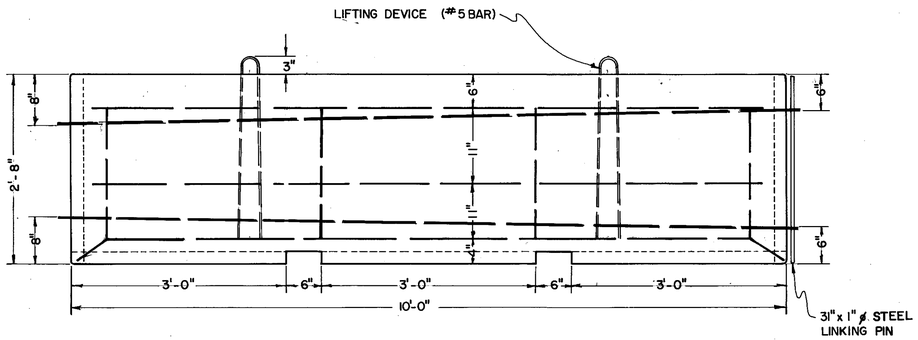

ELEVATION

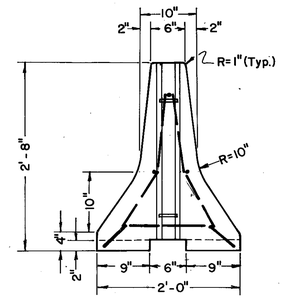

END

STEEL SCHEDULE			
SIZE	LENGTH	NO. REQ.	SKETCH
5	13'-4"	2	3" 10'-5 1/2" (10'-4" I.S.) 16 1/2"
5	10'-0"	2	6" 9'-0" 6"
5	2'-0"	8	12" 12"
5	9'-4"	3	9'-4"
5	1'-1"	4	1'-1"
5	5'-5"	2	R=1 1/4"

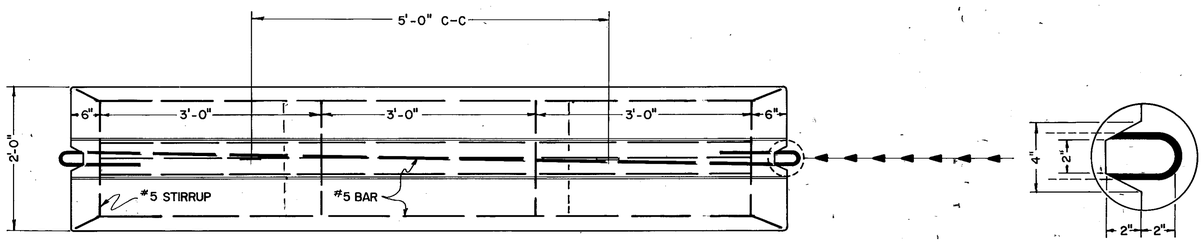

TOP

GENERAL NOTES

PORTABLE CONCRETE BARRIER SHOULD BE OF THE DESIGN SHOWN OR APPROVED EQUAL.

PORTABLE CONCRETE BARRIER OF DIFFERING GEOMETRIC SHAPE WILL NOT BE MIXED.

CONNECTING DEVICES WILL BE COMPATIBLE WITH OTHER UNITS AND WILL ALLOW PLACEMENT ON A 110' RADIUS.

BARRIERS WILL HAVE A SMOOTH UNIFORM SURFACE FREE FROM DEFECTS AND IRREGULARITIES.

BARRIERS WILL BE CAST OF LIGHT COLORED CONCRETE HAVING A MINIMUM 28 DAY COMPRESSION STRENGTH OF 3000#.

CASTING DATE SHALL BE SHOWN ON BARRIER.

BARRIER WILL INCLUDE 1 LINKING PIN PER UNIT.

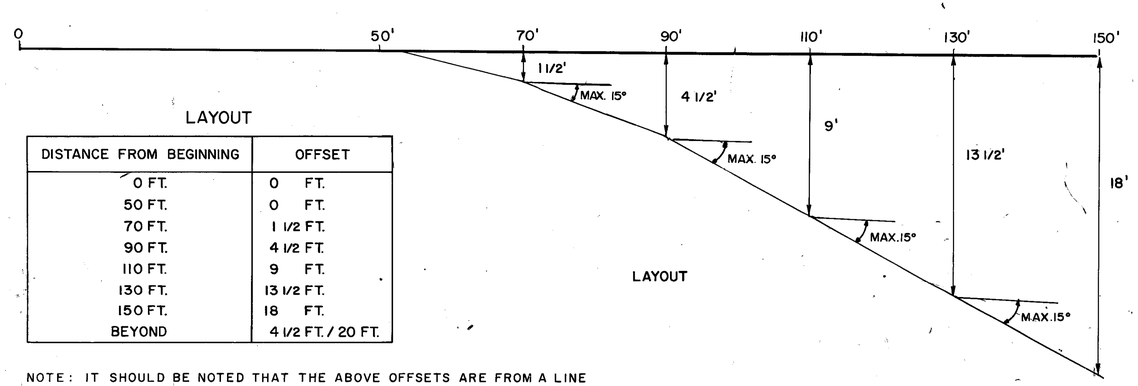

LAYOUT

LAYOUT

DISTANCE FROM BEGINNING	OFFSET
0 FT.	0 FT.
50 FT.	0 FT.
70 FT.	1 1/2 FT.
90 FT.	4 1/2 FT.
110 FT.	9 FT.
130 FT.	13 1/2 FT.
150 FT.	18 FT.
BEYOND	4 1/2 FT. / 20 FT.

NOTE: IT SHOULD BE NOTED THAT THE ABOVE OFFSETS ARE FROM A LINE WHICH IS PARALLEL TO THE ROADWAY CENTERLINE, WHETHER ON A CURVE OR TANGENT SECTION.

TABLE OF REVISIONS	
DESCRIPTION	DATE
ADDED LINES 5 & 6 TO STEEL SCHEDULE TABLE	8-31-79
REVISED DIMENSIONS OF STEEL IN SKETCH	8-31-79
ON LINE 1 (10'-4 1/2" TO 10'-5 1/2")(10'-3" TO 10'-4")	
ADDED DASHED LINE FOR SLOT IN TOP	8-31-79
ELEVATION OF CONCRETE BARRIER	
ADDED BARRIER LAYOUT SKETCH AND LAYOUT	8-31-79
UNDER GENERAL NOTES:	
CHANGED WHITE PORTLAND CEMENT TO LIGHT-	
COLORED	9-8-86
4000# TO 3000#	

THE STATE OF NEW HAMPSHIRE

DEPARTMENT OF TRANSPORTATION — BUREAU OF HIGHWAY DESIGN

PORTABLE CONCRETE BARRIER

FEDERAL PROJECT NO.	STATE PROJ. NO.	SHEET NO.	TOTAL SHEETS
F-012-2(32)	11139	13	48

REVISIONS AFTER PROPOSAL (USE BOTTOM LINES FIRST)

NO.	DATE	STATION	STATION	DESCRIPTION

NOTEBOOKS

BOOK NO.	PAGE NO.	BOOK NO.	PAGE NO.

	DATE		DATE
PLAN TRACED		INKED	
PLAN CHECKED		CHECKED	
PROFILE TRACED			
PROFILE CHECKED			

BRUNING 34582

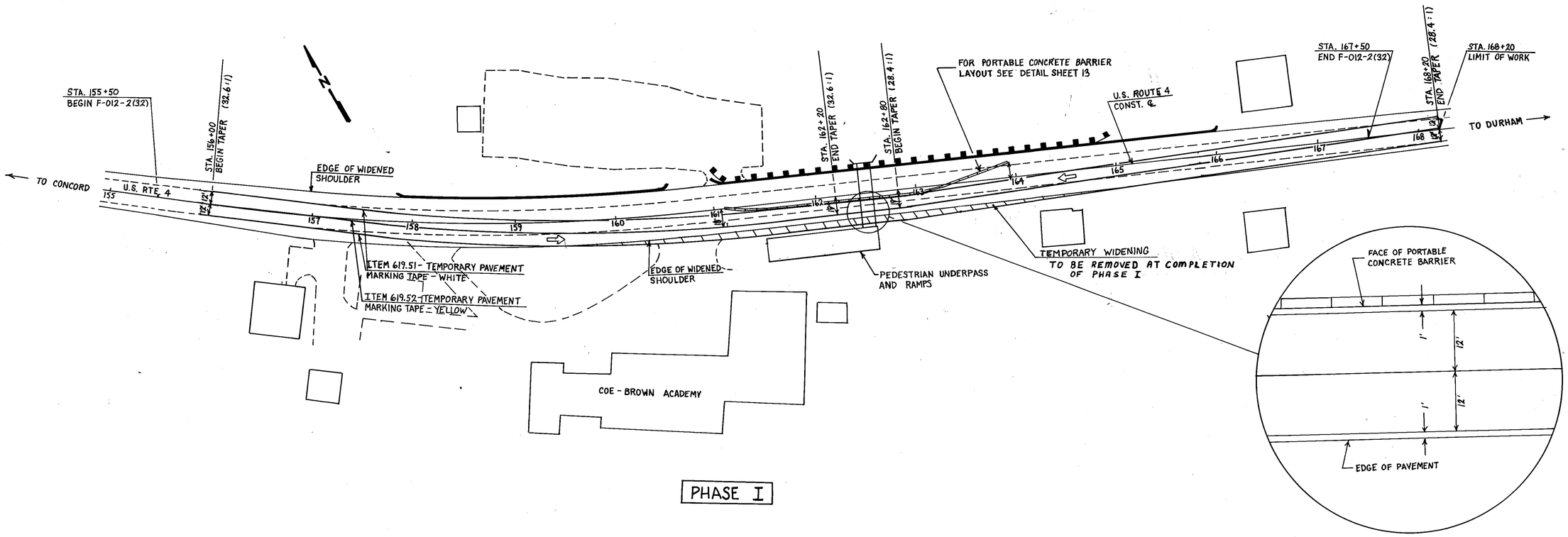

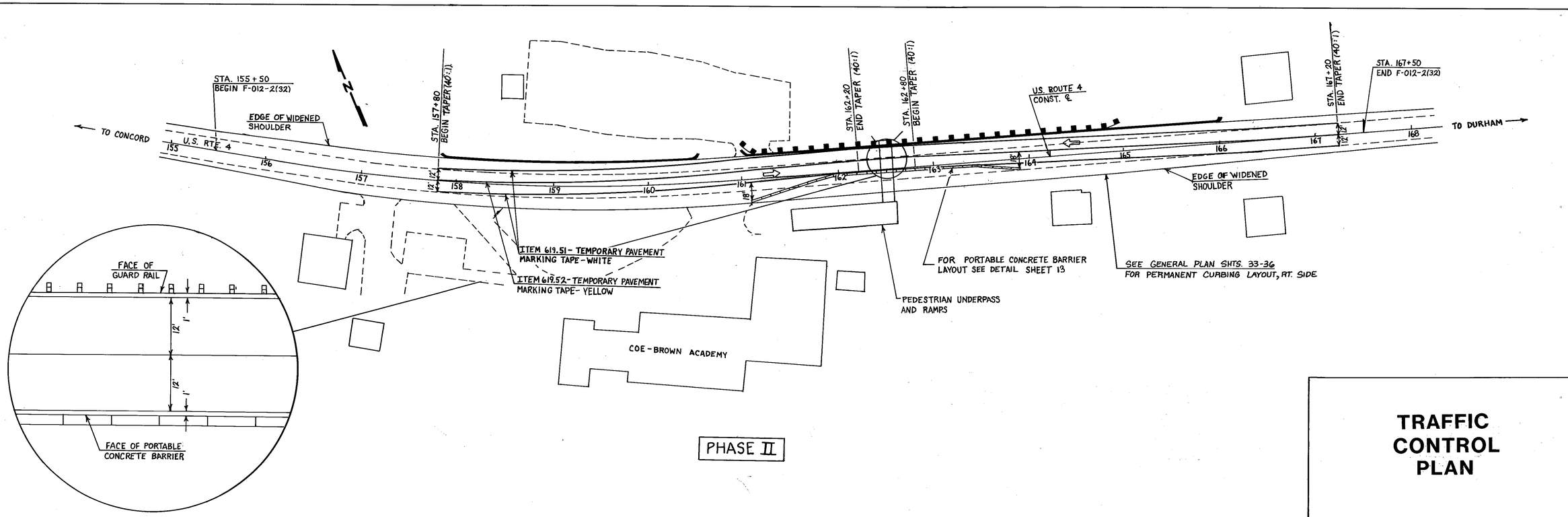

TRAFFIC CONTROL PLAN

FEDERAL PROJECT NO.	STATE PROJECT NO.	SHEET NO.	TOTAL SHEETS
F-012-2(32)	11139	13-A	48

REVISIONS AFTER PROPOSAL

NUMBER	DATE	STATION	STATION	DESCRIPTION

NOTEBOOKS

BOOK 12268 PAGE 2-16
BOOK PAGE
BOOK PAGE

EXISTING DETAIL S. GUNN DATE 5/17/90
PROPOSED DESIGN C. SKOV DATE 5/17/90
SHEET CHECKED DATE
AS BUILT DETAILS DATE

139215

BRUNING 44-242 75734

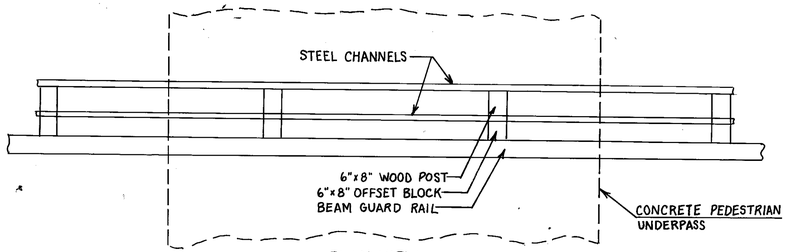

PLAN VIEW

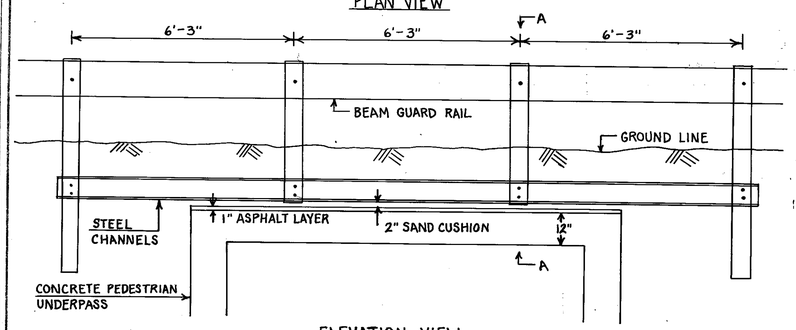

ELEVATION VIEW

NOTES

- MC 8x8.5 CHANNELS 20' LONG ON EACH SIDE OF POSTS.
- CHANNELS SHALL BE GALVANIZED A36 STEEL.
- ATTACH CHANNELS TO POSTS WITH 2 - 3/4" ϕ x 10' LONG A325 GALVANIZED H.S. BOLTS IN 13/16" ϕ HOLES (TYP.) WITH STANDARD WASHERS AND HEX-NUTS.
- POSTS SHALL BE CAREFULLY PLACED IN EXCAVATED HOLES WITH THE BOTTOM OF THE POSTS SET ON A 2" SAND CUSHION OVER THE TOP OF THE UNDERPASS.

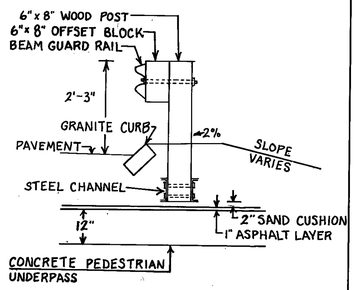

SECTION A-A

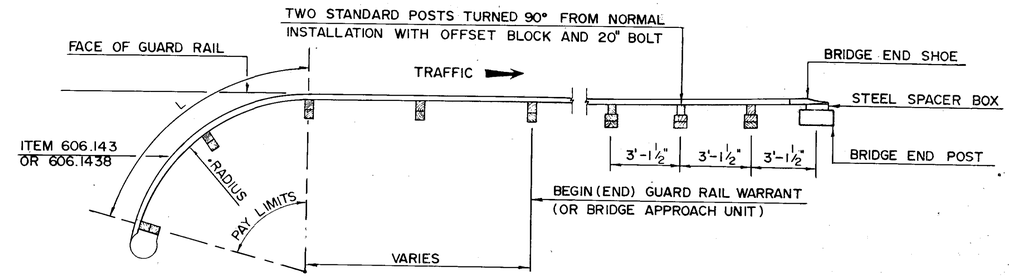

NOTE: RADIUS AS SHOWN ON PLAN. SPECIFY SHOP BENDING FOR 150' RADIUS OR LESS.

PLAN

TERMINAL UNIT (SPECIAL TREATMENT)

ITEM NO 606.1438 BEAM GUARD RAIL INCLUDING TERMINAL SECTION (POST SPACING 3'-1½" CENTERS)

ITEM NO 606.143 BEAM GUARD RAIL INCLUDING TERMINAL SECTION (POST SPACING 6'-3" CENTERS)

PAID LINEAR FEET

USE AT BEGINNING OR END OF SECTION FOR WARRANTED GUARD RAIL OR AS DIRECTED BY THE ENGINEER.

ITEM NO 606.86 TYPE J ANCHORAGES FOR BEAM GUARD RAIL (SEE SPECIAL DETAILS BELOW).
L GREATER THAN 50' USE LOCATION A.
L LESS THAN 50' USE LOCATION B.

PAID EACH

USE AS DIRECTED BY THE ENGINEER.

NOTE: IT IS THE INTENT OF THIS DETAIL TO INDICATE THAT THE EXPOSED END OF RAIL BE TURNED AWAY FROM ONCOMING TRAFFIC.

NOTE: THE FOLLOWING OPTIONS MAY BE USED (SUBSIDIARY TO ITEM 606.146)

1. DRIVE POST AND EXCAV. SUFFICIENTLY TO DRILL BOTH HOLES
2. PRE-DRILLED POSTS HAND DUG TO INSTALL POST

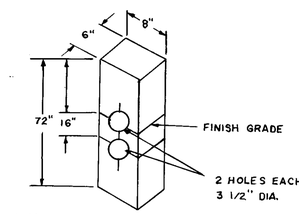

WOODEN POST MODIFICATION

(FOR FIRST POST, 25 FEET FROM ANCHOR, IN ALL BEAM GUARD RAIL TERMINAL UNIT TYPE 'F' INSTALLATIONS - SUBSIDIARY TO ITEM 606.146)

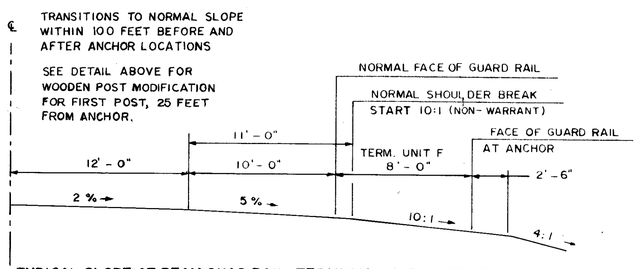

TYPICAL SLOPE AT BEAM GUAD RAIL TERMINAL UNIT TYPE F ITEM 606.146

(NOT TO SCALE)

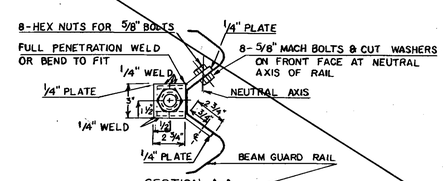

SECTION A-A

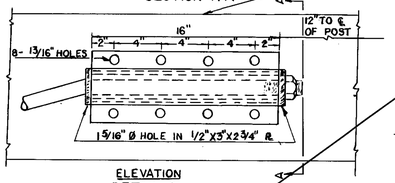

ELEVATION
DETAIL C
ANCHOR PLATE
SCALE 3"=1'-0"

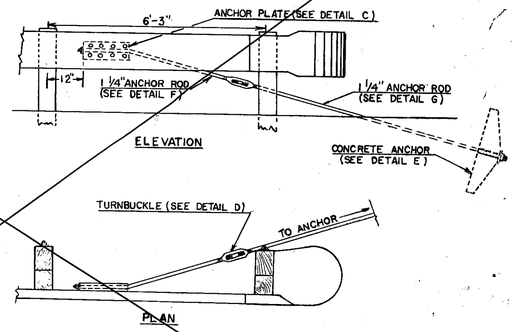

ELEVATION

PLAN

ANCHOR DETAIL FOR APPROACH TERMINAL IN CUT SECTIONS
SCALE 3/4"=1'-0"

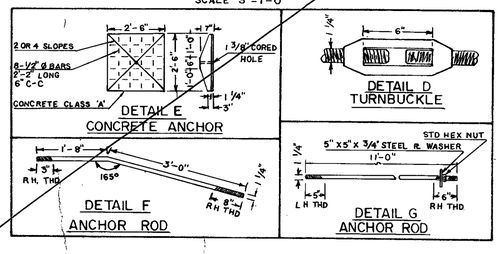

NOTE: THESE TERMINALS ARE TO BE USED ONLY WHEN SPECIFIED ON THE PLANS OR WHEN SPECIFICALLY APPROVED BY THE ENGINEER.

STATE OF NEW HAMPSHIRE

DEPARTMENT OF PUBLIC WORKS AND HIGHWAYS • HIGHWAY DESIGN DIVISION

MODIFIED AND SPECIAL BEAM GUARD RAIL TERMINALS

FEDERAL PROJECT NO.	STATE PROJECT NO.	SHEET NO.	TOTAL SHEETS
F-012-2(32)	11139		

REVISIONS AFTER PROPOSAL

NUMBER	DATE	STATION	STATION	DESCRIPTION

NOTEBOOKS

BOOK PAGE
BOOK PAGE
BOOK PAGE

	DATE
EXISTING DETAIL	
PROPOSED DESIGN	
SHEET CHECKED	
AS BUILT DETAILS	

BRUNING 58839

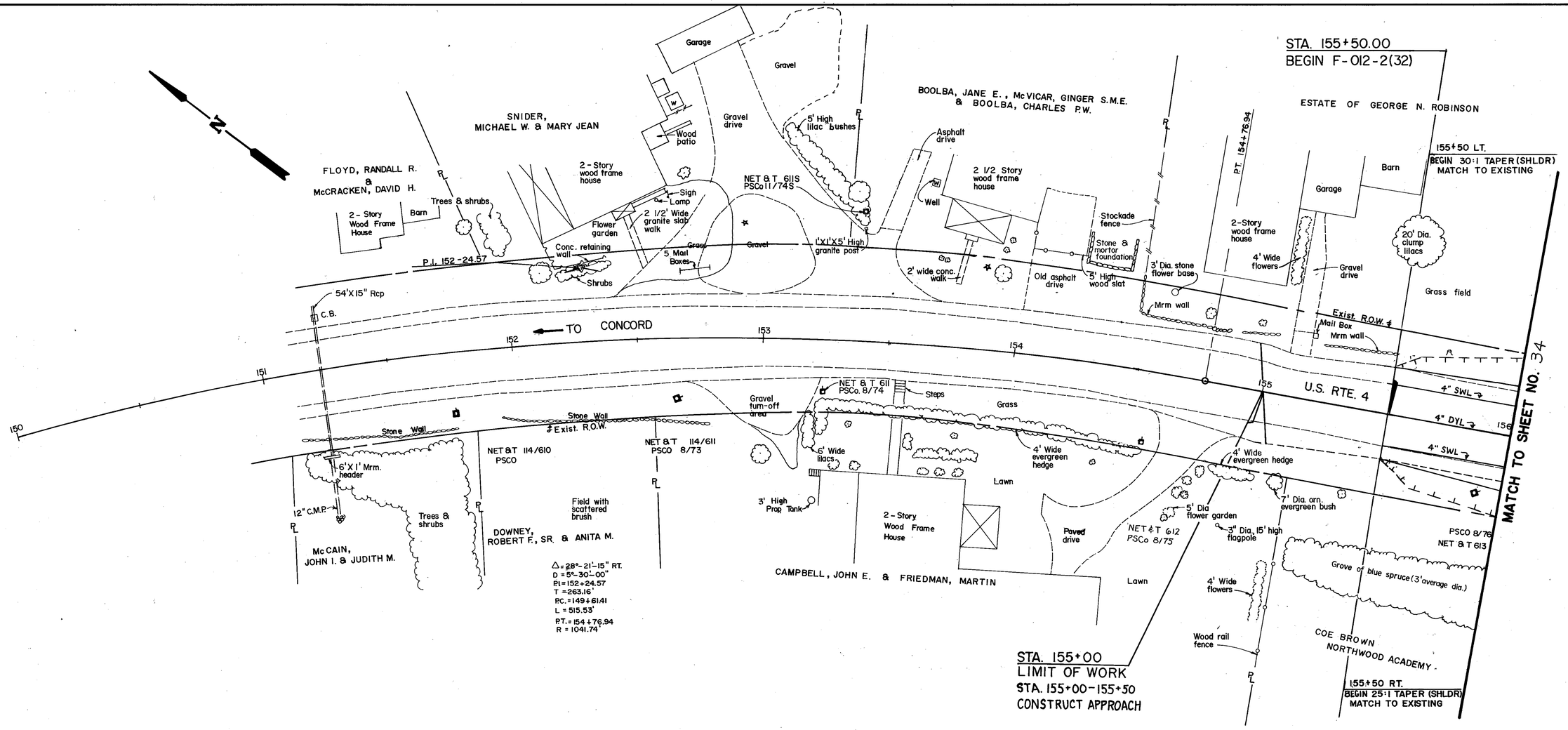

NUMBER	DATE	STATION	STATION	DESCRIPTION

REVISIONS AFTER PROPOSAL

NOTEBOOKS		
BOOK 12268	PAGE 2-14, 36-40	
BOOK 10601	PAGE 28-41	
BOOK 10660, 10719	PAGE 71-72, 4-10	

EXISTING DETAIL	DATE	
PROPOSED DESIGN	DATE	
SHEET CHECKED	J. KIRouac	DATE 5-11-90
AS BUILT DETAILS	DATE	

FEDERAL PROJECT NO.	STATE PROJECT NO.	SHEET NO.	TOTAL SHEETS
F-012-2(32)	11139	33	48

BRUNING 58839

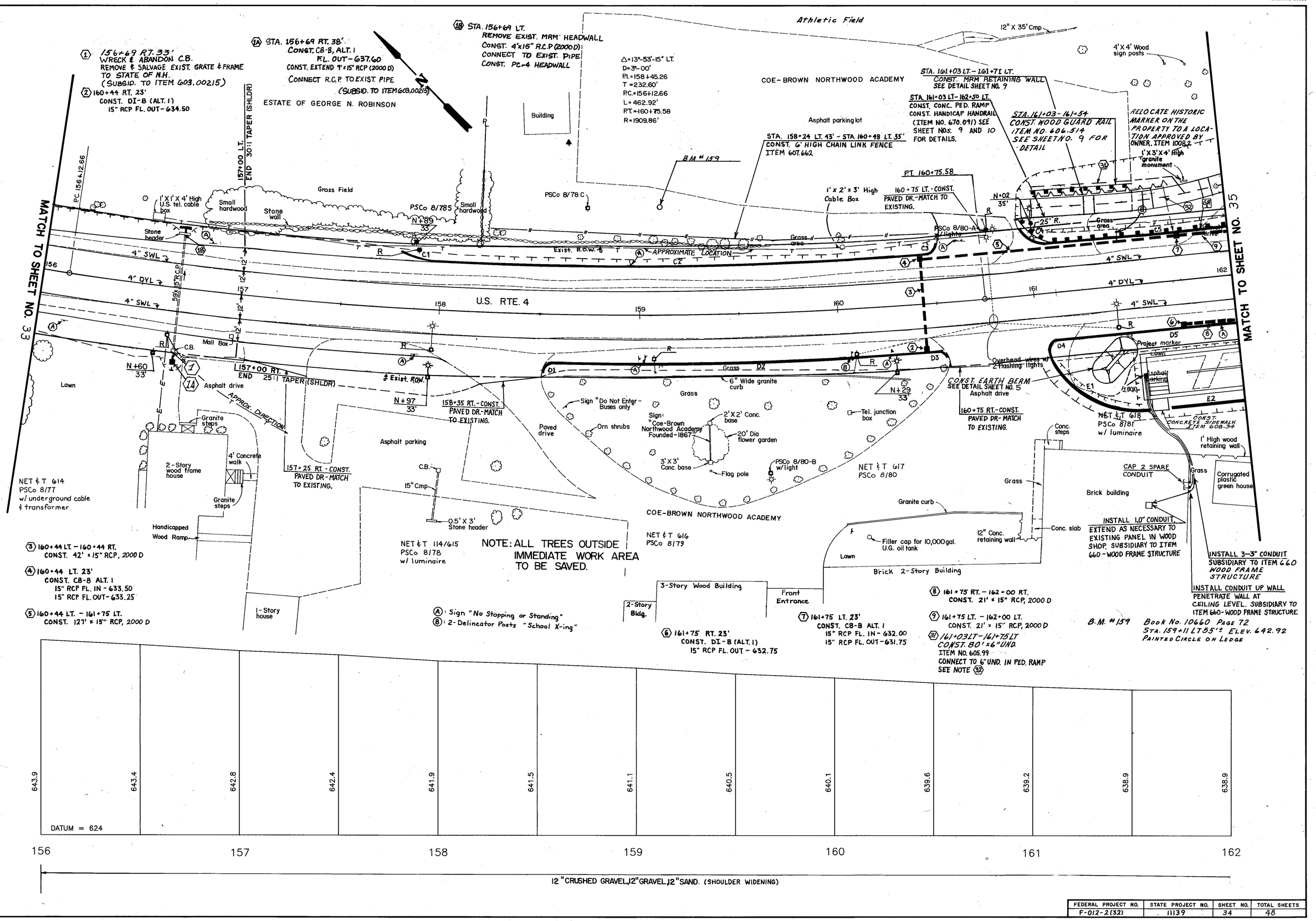

NUMBER	DATE	STATION	STATION	DESCRIPTION

REVISIONS AFTER PROPOSAL

NOTEBOOKS

BOOK 12268	PAGE 1-40
BOOK 10601	PAGE 28-41
BOOK 10660, 10719	PAGE 71-72, 4-10

EXISTING DETAIL	DATE	
PROPOSED DESIGN	DATE	
SHEET CHECKED	J. KIROUAC	DATE 5-11-90
AS BUILT DETAILS	DATE	

FEDERAL PROJECT NO.	STATE PROJECT NO.	SHEET NO.	TOTAL SHEETS
F-012-2(32)	11139	34	48

BRUNING 58839

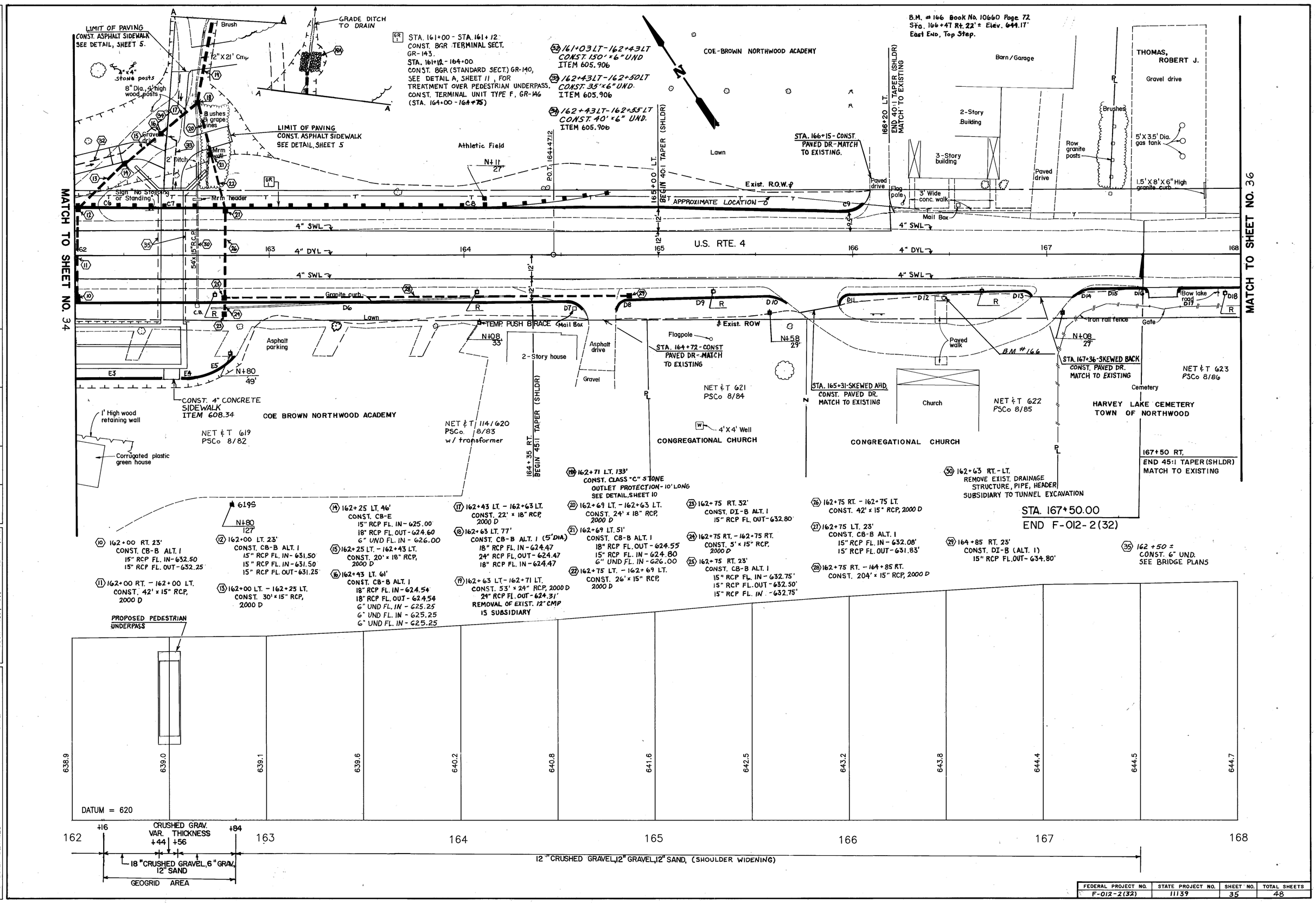

FEDERAL PROJECT NO.	STATE PROJECT NO.	SHEET NO.	TOTAL SHEETS
F-012-2(32)	11139	35	48

NOTEBOOKS		
BOOK 12266	PAGE 1-40	
BOOK 10601	PAGE 28-41	
BOOK 10660, 10719	PAGE 71-72, 6-10	

EXISTING DETAIL	DATE	
PROPOSED DESIGN	DATE	
SHEET CHECKED	DATE	5-11-90
AS BUILT DETAILS	DATE	

T. Kirouac

NUMBER	DATE	STATION	STATION	DESCRIPTION

REVISIONS AFTER PROPOSAL

BRUNING 58839

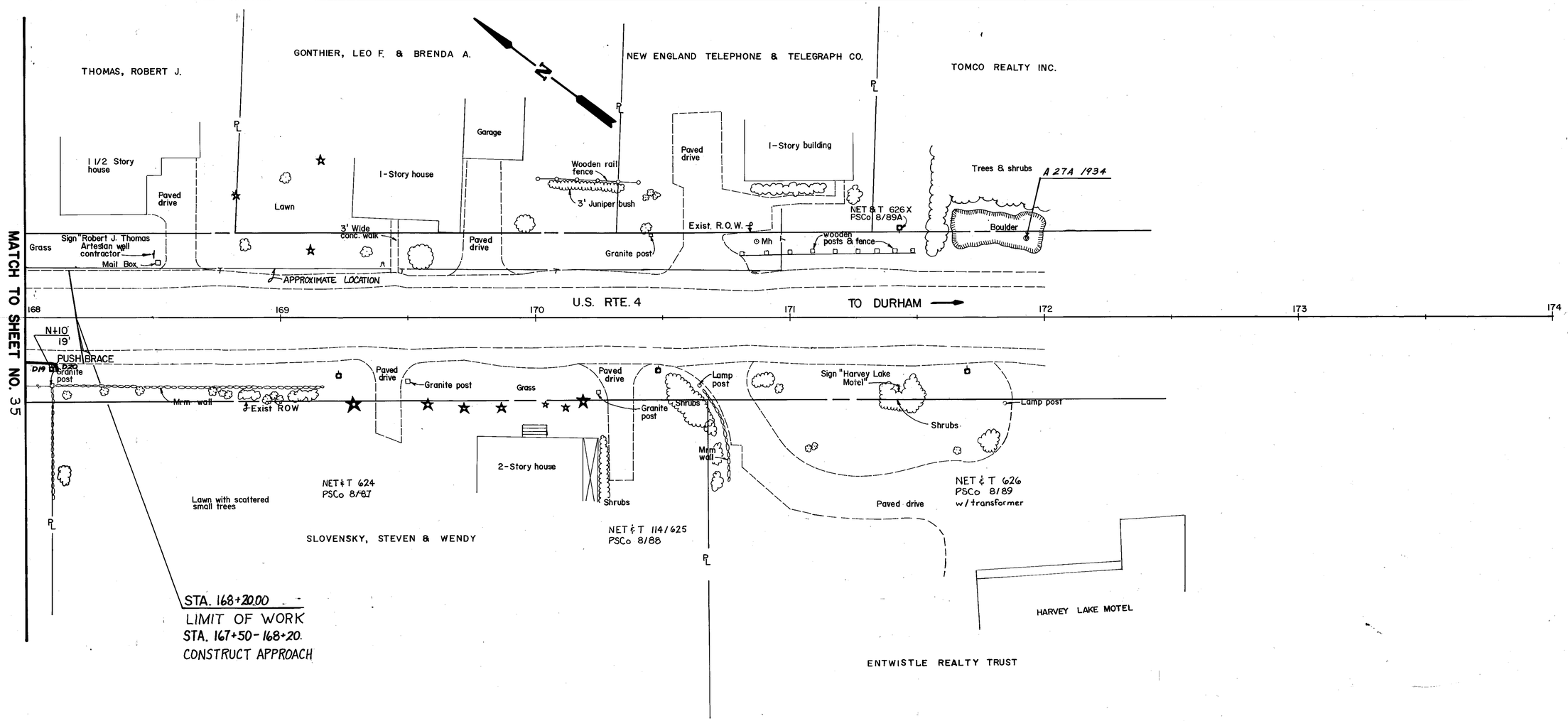

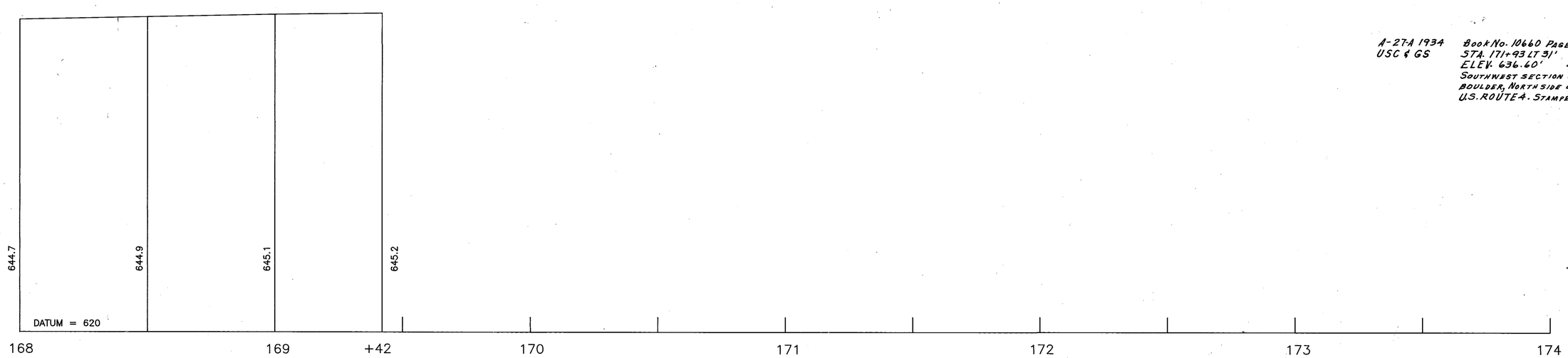

A-27A 1934
USC & GS

Book No. 10660 Page 72
STA. 171+93 LT 31'
ELEV. 636.60'
Southwest section of boulder, North side of U.S. Route 4. Stamped Disk.

NUMBER	DATE	STATION	STATION	DESCRIPTION

REVISIONS AFTER PROPOSAL

NOTEBOOKS	
BOOK 12268	PAGE 1-40
BOOK 10601	PAGE 28-41
BOOK 10660, 10719	PAGE 71-72, 4-10

EXISTING DETAIL	DATE	
PROPOSED DESIGN	DATE	
SHEET CHECKED	DATE	5-11-70
AS BUILT DETAILS	DATE	

T. Kiroura

FEDERAL PROJECT NO.	STATE PROJECT NO.	SHEET NO.	TOTAL SHEETS
F-012-2(32)	11139	36	48