THE STATE OF NEW HAMPSHIRE
DEPARTMENT OF TRANSPORTATION

CONSTRUCTION PLANS
FEDERAL AID PROJECT

CM-X-5153(001)
N.H. PROJECT NO. 10025-A
RAIL PLATFORM
PASSENGER RAIL FACILITIES

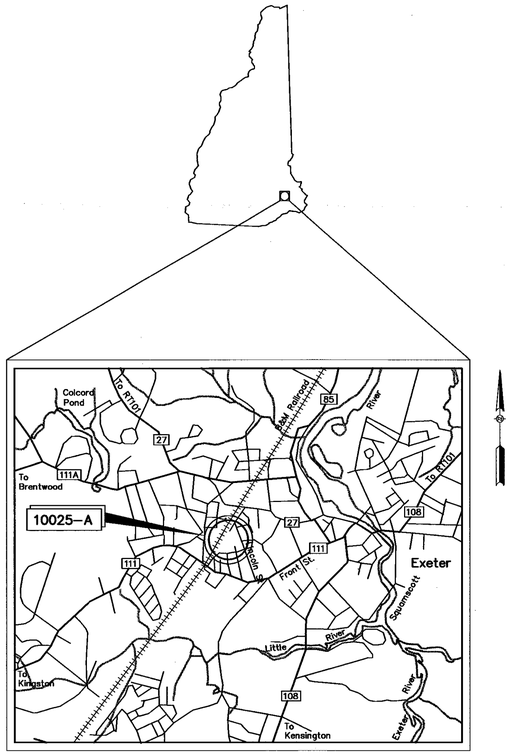

LOCATION MAP

2000 0 2000 4000
GRAPHIC SCALE IN FEET

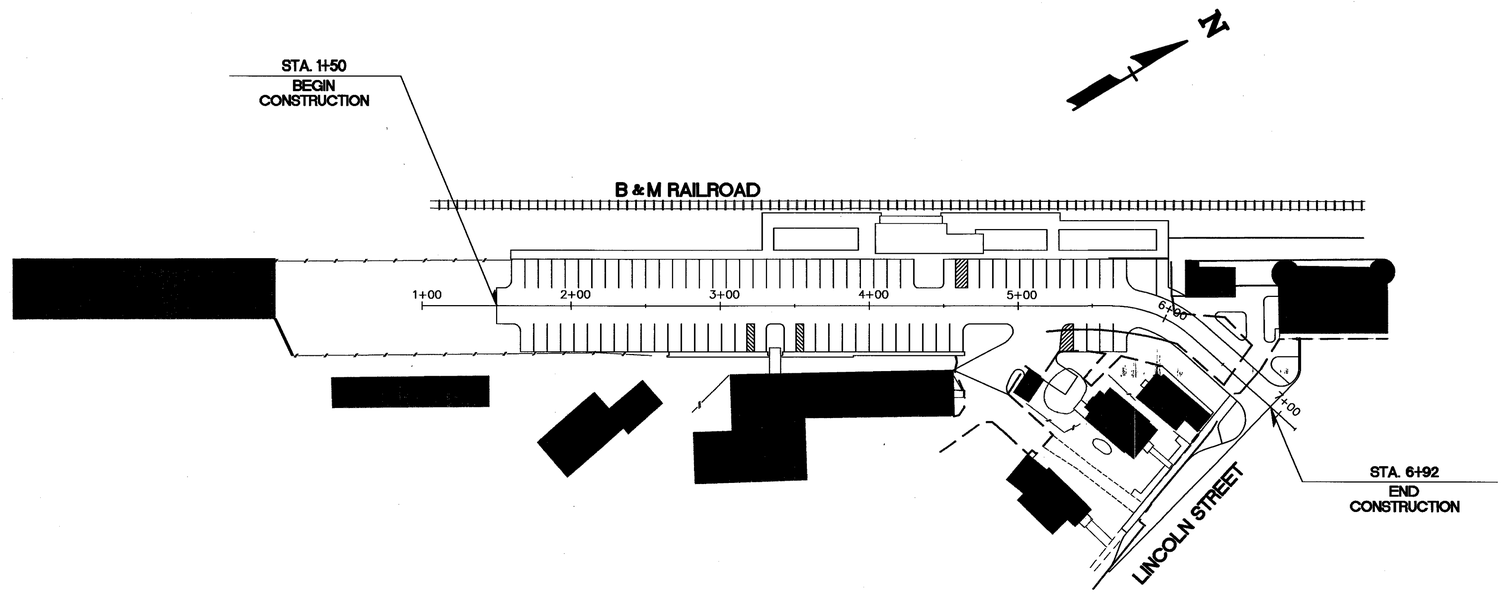

TOWN OF EXETER

COUNTY OF ROCKINGHAM
SCALE 1" = 50'

THE STATE OF NEW HAMPSHIRE
CRAIG A. GREEN
No. 5059
REGISTERED PROFESSIONAL ENGINEER

NHDOT THE STATE OF NEW HAMPSHIRE DEPARTMENT OF TRANSPORTATION

RECOMMENDED FOR APPROVAL:
DIRECTOR OF PROJECT DEVELOPMENT — DATE 11-28-00
ADMINISTRATOR, BUREAU OF MUNICIPAL HIGHWAYS — DATE 11/28/00
APPROVED:
ASSISTANT COMMISSIONER AND CHIEF ENGINEER — DATE

U.S. DEPARTMENT OF TRANSPORTATION
FEDERAL HIGHWAY ADMINISTRATION

APPROVED:
DIVISION ADMINISTRATOR — DATE

FEDERAL PROJECT NO.	STATE PROJECT NO.	SHEET NO.	TOTAL SHEETS
CM-X-5153(001)	10025-A	1	43

VHB Vanasse Hangen Brustlin, Inc.
Transportation
Land Development
Environmental Services
Six Bedford Farms, Suite 607
Bedford, New Hampshire 03110-6532
603 644 0888 • FAX 603 644 2385

DRAWN BY R.F. CLARK DATE 3/9/00
CHECKED BY DATE

As-Built Plans 04/10/03

INDEX OF SHEETS

SHEET NO.	DESCRIPTION
1	TITLE PAGE
2	INDEX OF SHEETS & GENERAL NOTES
3	INDEX OF STANDARD PLANS
4,5	STANDARD SYMBOLS
6	TYPICAL SECTION
7–11	SUMMARY OF QUANTITIES
12	STATION ID SIGN & LOW PLATFORM DETAILS
13	SIDEWALK RAMP DETAILS
14	DRIVEWAY DETAILS
15	MINOR INTERSECTION DETAILS
16	DRAINAGE DETAILS
17,18	LANDSCAPING DETAILS
19	MISCELLANEOUS DETAILS
20	REGULATORY SIGN TEXT LAYOUT
21	SITE LAYOUT & CURBING LAYOUT PLAN
22	PAVEMENT MARKING & SIGNING LAYOUT PLAN
23	DRAINAGE & GRADING PLAN
24	UTILITY PLAN
25	LANDSCAPING PLAN
26,27	SITE CROSS SECTIONS
28	ARCHITECTURAL TITLE PAGE
29	GENERAL NOTES
30	ABBREVIATIONS, CONVERSIONS, AND SYMBOLS
31	MOUNTING HEIGHTS
32	FLOOR PLAN
33	REFLECTED CEILING PLAN
34	ROOF PLAN
35	ELEVATIONS
36	BUILDING SECTIONS
37	BUILDING SECTIONS AND DETAILS
38	GENERAL NOTES AND ABBREVIATIONS
39	FOUNDATION AND ROOF FRAMING PLAN
40	STRUCTURAL SECTIONS
41	STRUCTURAL SECTIONS AND DETAILS
42	ROOF TRUSS LOADING DIAGRAMS
43	MINI HI PLATFORM ELECTRICAL / LIGHTING

GENERAL NOTES

1. CONSTRUCT THIS PROJECT IN ACCORDANCE WITH NHDOT STANDARD SPECIFICATIONS DATED 1997, CURRENT STANDARD PLANS, SUPPLEMENTAL SPECIFICATIONS AND SPECIAL PROVISIONS INCLUDED IN THE PROPOSAL.

2. HIGH TENSION OVERHEAD TRANSMISSION LINES ARE LOCATED THROUGHOUT THE PROJECT WITH CROSSINGS AT VARIOUS LOCATIONS AND RUNNING ALONG THE ROAD THROUGHOUT THE PROJECT EVEN ON REGULAR POLES. THE CONTRACTOR IS ADVISED THAT EXTREME CAUTION WILL BE REQUIRED IN THE OPERATION OF EQUIPMENT, ESPECIALLY CRANES AND PILE DRIVING EQUIPMENT.

3. REMOVE TOPSOIL FOR ITS TOTAL DEPTH WITHIN THE LIMITS OF THE SLOPE LINES. UNLESS OTHERWISE DIRECTED, STOCKPILE TOPSOIL AND USE IT ON THIS PROJECT AS NEEDED UNDER SECTION 641 – LOAM AND/OR SECTION 647 – HUMUS.

4. REMOVAL OF EXISTING CONCRETE PAVEMENT WILL BE PAID UNDER ITEM 203.2 – ROCK EXCAVATION. THE BITUMINOUS PAVEMENT ABOVE THE CONCRETE WILL NOT BE PAID UNDER ITEM 203.2.

5. MODIFY SUPERELEVATION ON EXISTING CURVES BY THE USE OF A PAVEMENT LEVELING COURSE TO THE RATES INDICATED ON THE PLANS OR AS ORDERED.

6. EXISTING DELINEATORS AND WITNESS MARKERS THAT ARE REMOVED AND DETERMINED BY THE ENGINEER TO BE IN ACCEPTABLE CONDITION SHALL BE RESET (SUBSIDIARY). ADDITIONAL DELINEATORS AND WITNESS MARKERS ORDERED WILL BE PAID UNDER THE APPROPRIATE ITEMS OF THE CONTRACT.

7. NO EXISTING MONUMENTS, BOUNDS, OR BENCHMARKS SHALL BE DISTURBED WITHOUT FIRST MAKING PROVISIONS FOR RELOCATION.

8. PERFORM ALL WORK WITHIN THE EXISTING RIGHT–OF–WAY, UNLESS OTHERWISE SHOWN ON THE PLANS OR AS ORDERED BY THE ENGINEER.

9. REMOVE UNPROTECTED PROJECT MARKERS (SUBSIDIARY).

10. SURVEY DATA FOR THIS PROJECT WAS COLLECTED BY SDR AND THE FIELD NOTES CAN BE FOUND IN THE FIELD BOOK(S) 4801. COORDINATES ARE NEW HAMPSHIRE STATE PLANE COORDINATES OF N.A.D. 1983 AND THE BEARINGS ARE GRID. ELEVATIONS ARE REFERENCED TO N.G.V.D. 1929.

THE FOLLOWING GENERAL NOTES WILL BE USED ON THIS PROJECT:

1		3			6	7	8		10		

STATE OF NEW HAMPSHIRE

PASSENGER RAIL STATION – EXETER, N.H.

INDEX OF SHEETS AND GENERAL NOTES

VHB Vanasse Hangen Brustlin, Inc.

REVISION DATE	DRAWING NAME	SHEET SCALE	FEDERAL PROJECT NO.	STATE PROJECT NO.	SHEET NO.	TOTAL SHEETS
NOV 10, 2000	51084IDX1	AS SHOWN		10025–A	2	43

WORK ZONE TRAFFIC CONTROL STANDARD PLANS

TC-1	AMENDMENTS TO REVISION 3 (PART VI) OF THE MUTCD	REVISED	MAY 19, 1997
TC-2	PERMANENT CONSTRUCTION SIGNING	REVISED	MAY 19, 1997
TC-3	TWO-WAY TRAFFIC LANE SHIFT	REVISED	MAY 19, 1997
TC-4	BRIDGE REHABILITATION: STOP/YIELD CONTROL	REVISED	MAY 19, 1997
TC-5	BRIDGE REHABILITATION: SIGNALIZED CONTROL	REVISED	MAY 19, 1997
TC-6	TWO LANE CLOSURE UTILIZING BREAKDOWN LANE (DIVIDED HIGHWAY) SINGLE LANE CLOSURE (DIVIDED HIGHWAY)	REVISED	MAY 19, 1997
TC-7	LANE CLOSURE WITH LANE SHIFT FOR SPEED REDUCTION (DIVIDED HIGHWAY) SINGLE LANE SHIFT (DIVIDED HIGHWAY)	REVISED	MAY 19, 1997
TC-8	MULTI-LANE CLOSURE (DIVIDED HIGHWAY)	REVISED	MAY 19, 1997

NOTE:

SHEETS TC-1 THROUGH TC-8 AMEND PART VI (REVISION 3) OF THE ***MANUAL ON UNIFORM TRAFFIC CONTROL DEVICES (MUTCD).*** THEREFORE, THESE SHEETS ARE TO BE USED IN CONJUNCTION WITH THE ***MUTCD*** AND SECTION 619 OF THE STANDARD SPECIFICATIONS FOR WORK ZONE TRAFFIC CONTROL ON ALL PROJECTS.

STANDARD PLANS

STANDARD NO. 1	CONCRETE AND M.R.M. HEADWALLS	REVISED	MARCH 24, 1977
STANDARD NO. 1A	CONCRETE AND M.R.M. HEADWALLS	REVISED	MAY 8, 1970
STANDARD NO. 2	STEEL ARCH PIPES, SLOPE PAVING, UNDERDRAIN HEADWALL	REVISED	MARCH 1, 1983
STANDARD NO. 2A	CORRUGATED ALUMINUM PIPE, PIPE ARCH, UNDERDRAIN FLUSHING BASIN	REVISED	DECEMBER 20, 1982
STANDARD NO. 3	CATCH BASINS, DROP INLETS	REVISED	OCTOBER 17, 1983
STANDARD NO. 3A	GRATES FOR C.B.'S & D.I.'S	REVISED	OCTOBER 17, 1983
STANDARD NO. 3B	CATCH BASINS, DROP INLETS, TRAP	REVISED	OCTOBER 17, 1983
STANDARD NO. 4	CURBING	REVISED	APRIL 21, 1982
STANDARD NO. 5	CONCRETE BOUND, STEPS	REVISED	NOVEMBER 1, 1984
STANDARD NO. 5A	GUTTERS, SLUICE, SLOPES, MUCK EXCAVATION	REVISED	FEBRUARY 26, 1975
STANDARD NO. GR-1	BEAM GUARDRAIL, STD. SECTION-WOOD POSTS & HARDWARE DETAILS	REVISED	MAY 1, 1995
STANDARD NO. GR-1A	BEAM GUARDRAIL, STD. SECTION-STEEL POSTS & HARDWARE DETAILS	REVISED	MAY 1, 1995
STANDARD NO. GR-2		DELETED	
STANDARD NO. GR-2A		DELETED	
STANDARD NO. GR-2B		DELETED	
STANDARD NO. GR-3	BEAM GUARDRAIL, TERMINAL UNIT TYPE G-2	REVISED	MAY 1, 1995
STANDARD NO. GR-4	PRECAST CONC. MEDIAN BARRIER 1070 mm F-SHAPE (DOUBLE-FACED)	REVISED	MAY 1, 1995
STANDARD NO. 9	WOVEN WIRE & CHAIN LINK FENCE	REVISED	AUGUST 2, 1977
STANDARD NO. 9A	STEEL WITNESS MARKER, STEEL SIGN POST, DELINEATOR POST	REVISED	MAY 15, 1985
STANDARD NO. 10		DELETED	
STANDARD NO. 10A		DELETED	
STANDARD NO. 11	END SECTIONS FOR PIPES	REVISED	MAY 21, 1975
STANDARD NO. 12	DELINEATORS FOR GUARDRAIL, MEDIAN BARRIERS	REVISED	MAY 15, 1985
STANDARD NO. 12A	DELINEATOR SPACING FOR RAMPS AND LOOPS	REVISED	MAY 15, 1985
STANDARD NO. 13		DELETED	
STANDARD NO. 14		DELETED	
STANDARD NO. 15		DELETED	
STANDARD NO. 16		DELETED	

THE FOLLOWING STANDARD PLANS WILL BE USED ON THIS PROJECT:

				3	3A	3B	4	5									9				

STATE OF NEW HAMPSHIRE

PASSENGER RAIL STATION – EXETER, N.H.

INDEX OF STANDARD PLANS

VHB Vanasse Hangen Brustlin, Inc.

REVISION DATE	DRAWING NAME	SHEET SCALE	FEDERAL PROJECT NO.	STATE PROJECT NO.	SHEET NO.	TOTAL SHEETS
NOV 10, 2000	51084IDX2	AS SHOWN		10025-A	3	43

GENERAL CULTURE

EDGE OF PAVEMENT (ep)
TRAVELED WAY (tw)
(pavement removed outside slope lines)

DRIVEWAYS
(label surface type)

BUILDINGS
(porch)
(building to be removed)
(label house or type of building)

FOUNDATION
(label type)

GUARDRAIL (LABEL TYPE)
(NEW)
(existing) bgr cgr

CURB
(NEW)
(existing)
(label type)

STEPS AND WALK
(label type)

INTERMITTENT WATER COURSE

SHORE LINE
river/stream
pond
(label name of water body)

BRUSH OR WOODS LINE

TREES (PLANS)
(deciduous) (coniferous) (stump)

TREES (CROSS-SECTIONS)
(show circumference in mm & type)

HEDGE
(label type)

WELL

FLAG POLE
fp

LEACH FIELD
leach field

GAS PUMP
gp

FUEL TANK (ABOVE GROUND)
ft
(label size & type)

SEPTIC TANK

GRAVE
gr

BRIDGE CROSSING STREAM

HIGHWAY OVERPASS

ROCK OUTCROP

ORIGINAL GROUND (TYPICALS)

ROCK LINE (TYPICALS & SECTIONS ONLY)

STONE WALL
(NEW)
(existing)

RETAINING WALL (LABEL TYPE)
(points toward retained ground)

FENCE (BARBED WIRE)

FENCE (OTHER)
(existing)
(NEW)
(label fence type)

SIGNS
(single post)
(double post)

MAILBOX
mb

SATELLITE DISH ANTENNA
dc

WETLANDS

WETLAND DESIGNATION NUMBER
6
PUB2E

DELINEATED WETLAND

POTENTIAL WET AREA SYMBOL

ENGINEERING

CONSTRUCTION BASELINE
30
31

PC, PT, POT (ON CONST BASELINE)

PI (IN CONSTRUCTION BASELINES)

INTERSECTION OR EQUATION OF TWO LINES

ORIGINAL GROUND LINE (PROFILES AND CROSS-SECTIONS)

PROFILE GRADE LINE (PROFILES AND CROSS-SECTIONS)

SLOPE LINE (FILL)

SLOPE LINE (CUT)

PROFILES AND CROSS SECTIONS:

ORIGINAL GROUND ELEVATION (LEFT)
FINISHED GRADE ELEVATION (RIGHT)
22.10
24.123

INTERSTATE NUMBERED HIGHWAY
INTERSTATE 93

UNITED STATES NUMBERED HIGHWAY
3

STATE NUMBERED HIGHWAY
25

BORING LOCATION
B1

TEST PIT
TP1

STATE OF NEW HAMPSHIRE
DEPARTMENT OF TRANSPORTATION – BUREAU OF HIGHWAY DESIGN

STANDARD SYMBOLS

VHB Vanasse Hangen Brustlin, Inc.

REVISION DATE	DRAWING NAME	SHEET SCALE	FEDERAL PROJECT NO.	STATE PROJECT NO.	SHEET NO.	TOTAL SHEETS
NOV 10, 2000	51084SYM1	AS SHOWN		10025-A	4	43

DRAINAGE

MANHOLE (existing) — MANHOLE (NEW)
CATCH BASIN (existing) — CATCH BASIN (NEW)
DROP INLET (existing) — DROP INLET (NEW)

DRAINAGE PIPE (existing) — (label size & type)
DRAINAGE PIPE (NEW)
UNDERDRAIN (existing) — (label size & type)
UNDERDRAIN (NEW)
HEADER (existing & NEW)
END SECTION (existing & NEW)
OPEN DITCH (NEW)
EROSION CONTROL/ STONE SLOPE PROTECTION

show direction of flow

FLOODPLAIN / FLOODWAY

500 YEAR FLOODPLAIN BOUNDARY
100 YEAR FLOODPLAIN BOUNDARY
FLOODWAY
100 YEAR FLOODPLAIN BOUNDARY
500 YEAR FLOODPLAIN BOUNDARY
APPROXIMATE 100 YEAR FLOOD BOUNDARY

BOUNDARIES / RIGHT-OF-WAY

RIGHT-OF-WAY LINE — (label type)
PROPERTY LINE — HATFIELD / McCOY
TOWN LINE — TOWN LINE / BOW CONCORD
COUNTY LINE — COUNTY LINE / COOS GRAFTON
STATE LINE — STATE LINE / MAINE NEW HAMPSHIRE
BOUND — Bnd — NH Bnd
STATE LINE/ TOWN LINE MONUMENT — S/L — T/L
NHDOT PROJECT MARKER
IRON PIPE OR PIN — ip
DRILL HOLE IN ROCK — dh
NATIONAL FOREST
PROPERTY PARCEL NUMBER — 2
HISTORIC PROPERTY — H

UTILITIES

TELEPHONE POLE
POWER POLE
JOINT OCCUPANCY
MISCELLANEOUS/UNKNOWN POLE
GUY POLE OR STUB
(plot point at face not center of symbol)

POLE STATUS:
REMOVE, NEW, LEAVE, OR TEMPORARY AS APPLICABLE e.g.:
R — N +22.0 4.80 — L — T +22.0 4.80

LIGHT POLE
LIGHT ON POWER POLE
LIGHT ON JOINT POLE
existing — NEW

RAILROAD — (label ownership)
RAILROAD SIGN
RAILROAD SIGNAL
GROUND LIGHT/LAMP POST — gl — lp

UNDERGROUND UTILITIES

WATER (existing) — w
WATER (PROPOSED) — PW
SEWER (existing) — s
SEWER (PROPOSED) — PS
TELEPHONE (existing) — T
TELEPHONE (PROPOSED) — PT
ELECTRIC (existing) — E
ELECTRIC (PROPOSED) — PE
GAS (existing) — G
GAS (PROPOSED) — PG
LIGHTING (existing)
LIGHTING (PROPOSED) — PL
OVERHEAD ELECTRIC TRANSMISSION LINE — OE
(label size, type and noted if abandoned on existing lines)

UTILITY JUNCTION BOX — jb (existing) — JB (NEW)

WATER GATE
WATER SHUT OFF
GAS SHUT OFF
(existing) — (NEW)

MANHOLE (SEWER, DRAINAGE, ETC.) — (label type)
HYDRANT

TRAFFIC SIGNALS

MAST ARM (existing)
MAST-ARM (NEW) (WITH TRAFFIC SIGNAL HEADS) — 9.0 MA — (note angle from to arm)
OPTICOM RECEIVER
OPTICOM STROBE
TRAFFIC SIGNAL (existing) — (existing) — (NEW)
PEDESTAL WITH PEDESTRIAN SIGNAL HEADS AND PUSH BUTTON UNIT
STEEL SPAN WIRE POLES
SIGNAL CONDUIT (existing)
SIGNAL CONDUIT (NEW)
CONTROLLER CABINET — (existing) cc — (NEW) CC
METER PEDESTAL — mp — MP
PULL BOX — pb — PB
HAND HOLE — hh
LOOP DETECTOR (QUADRUPOLE) — (existing) — (label size) (NEW)
LOOP DETECTOR (RECTANGULAR) — (existing)
LOOP DETECTOR — (label size) (NEW)

VHB Vanasse Hangen Brustlin, Inc.

REVISION DATE	DRAWING NAME	SHEET SCALE	FEDERAL PROJECT NO.	STATE PROJECT NO.	SHEET NO.	TOTAL SHEETS
NOV 10, 2000	51084SYM2	AS SHOWN		10025-A	5	43

STATE OF NEW HAMPSHIRE
DEPARTMENT OF TRANSPORTATION – BUREAU OF HIGHWAY DESIGN

STANDARD SYMBOLS

TYPICAL SECTION OF IMPROVEMENT

EXETER RAIL STATION

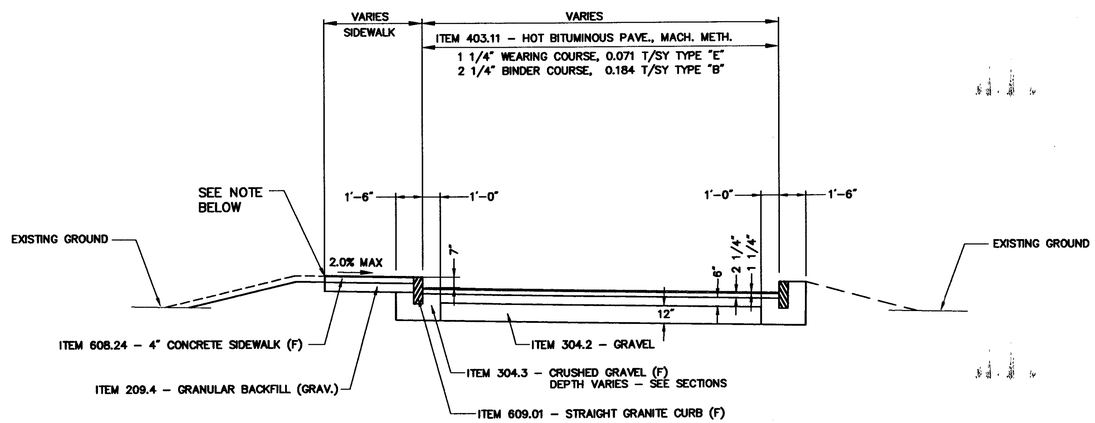

NOTE:
WHERE CONCRETE SIDEWALK ABUTS A FIXED OBJECT A 1/2" ELASTOMERIC SEALANT (CONFORMING TO 562.1 AND SUBSIDIARY TO 608.24) SHALL BE USED.

ASPHALT PAVEMENT SECTION
STA 11+50 TO STA 61+92
SCALE: 1/4" = 1' – 0"

STATE OF NEW HAMPSHIRE

PASSENGER RAIL STATION – EXETER, N.H.

TYPICAL SECTION

VHB Vanasse Hangen Brustlin, Inc.

REVISION DATE	DRAWING NAME	SHEET SCALE	FEDERAL PROJECT NO.	STATE PROJECT NO.	SHEET NO.	TOTAL SHEETS
NOV 10, 2000	51084TYP	AS SHOWN		10025–A	6	43

SUMMARY OF QUANTITIES (ESTIMATED)

THIS INFORMATION IS FOR BIDDING PURPOSES ONLY

* NOT AN ITEM TOTAL

CURBING

ITEM NO.			609.01	609.02	609.216	609.5
DESCRIPTION	MARK NUMBER	RADIUS	STRAIGHT GRANITE CURB (F)	CURVED GRANITE CURB (F)	STRAIGHT GRANITE SLOPE CURB 6" HIGH (F)	RESET GRANITE CURB
UNIT		FT.	L.F.	L.F.	L.F.	L.F.
LOCATION						
STA. 1+55.00 LT 12.00 - 1+60.00 LT 17.00	1A	5.0		8.00		
STA. 1+60.00 LT 17.00 - 1+60.00 LT 31.00	2A		14.00			
STA. 1+60.00 LT 31.00 - 4+30.00 LT 31.00	3A		270.00			
STA. 4+30.00 LT 31.00 - 4+30.00 LT 15.00	4A		16.00			
STA. 4+30.00 LT 15.00 - 4+34.00 LT 12.00	5A	3.0		5.00		
STA. 4+46.00 LT 12.00 - 4+50.00 LT 15.00	6A	3.0		5.00		
STA. 4+50.00 LT 15.00 - 4+50.00 LT 31.00	7A		16.00			
STA. 4+50.00 LT 31.00 - 5+70.34 LT 31.40	8A		123.00			
STA. 5+70.34 LT 31.40 - 5+71.07 LT 20.56	9A		11.00			
STA. 5+71.07 LT 20.56 - 5+78.85 LT 12.00	10A	10.0		14.00		
STA. 5+78.85 LT 12.00 - 6+20.42 LT 12.00	11A	90.0	48.00			~~48.00~~ 0.00
STA. 6+20.42 LT 12.00 - 6+77.39 LT 12.00	12A		49.00			~~49.00~~ 0.00
STA. 6+80.83 LT 12.00 - 6+89.81 LT 31.95	13A	12.0		28.00		
STA. 6+89.81 LT 31.95 - 6+76.57 LT 46.15	14A		19.00			
STA. 6+83.78 RT 154.51 - 6+82.64 RT 146.76	15A	25.0	8.00			
STA. 6+82.64 RT 146.76 - 6+78.16 RT 135.11	16A		12.50			
STA. 6+78.16 RT 135.11 - 6+76.50 RT 126.85	17A	25.0	8.50			
STA. 6+76.50 RT 126.85 - 6+76.18 RT 116.09	18A		26.00			
STA. 6+74.69 RT 63.98 - 6+78.00 RT 50.82	19A	25.0	14.00			
STA. 6+78.00 RT 50.82 - 6+87.38 RT 34.47	20A		19.00			
STA. 6+87.38 RT 34.47 - 6+76.20 RT 12.31	21A	15.0		31.00		
STA. 6+76.20 RT 12.31 - 6+60.42 RT 12.00	22A		54.00			
STA. 6+60.42 RT 12.00 - 6+87.33 RT 12.00	23A	66.0	28.00			
STA. 6+87.33 RT 12.00 - 5+76.68 RT 12.87	24A	8.0		15.00		
STA. 5+78.94 RT 30.08 - 5+76.68 RT 21.86	25A		8.00			
STA. 5+31.48 RT 31.00 - 5+78.94 RT 30.08	26A		43.00			
STA. 5+27.70 RT 39.24 - 5+31.48 RT 31.00	27A	4.5		12.00		
STA. 4+97.17 RT 44.40 - 5+04.50 RT 47.05	28A	4.0		11.50		
STA. 4+92.57 RT 53.38 - 4+97.17 RT 44.40	29A	25.0	10.00			
STA. 4+92.57 RT 53.38 - 4+93.42 RT 59.55	30A	8.0		6.50		
STA. 4+56.38 RT 43.34 - 4+89.76 RT 25.73	31A		38.00			
STA. 4+89.76 RT 25.73 - 4+96.13 RT 19.27	32A	15.0		9.00		
STA. 4+91.67 RT 12.00 - 4+96.13 RT 19.27	33A	5.0		10.00		
STA. 4+70.99 RT 12.00 - 4+91.67 RT 12.00	34A		21.00			
STA. 4+65.99 RT 17.00 - 4+70.99 RT 12.00	35A	5.0		8.00		
STA. 4+65.99 RT 31.00 - 4+65.99 RT 17.00	36A		14.00			
STA. 3+45.99 RT 31.00 - 4+65.99 RT 31.00	37A		120.00			
STA. 3+45.99 RT 15.00 - 3+45.99 RT 31.00	38A		16.00			
STA. 3+42.99 RT 12.00 - 3+45.99 RT 15.00	39A	3.0		2.00		
STA. 3+27.99 RT 15.00 - 3+30.99 RT 12.00	40A	3.0		2.00		
STA. 3+28.99 RT 31.00 - 3+27.99 RT 15.00	41A		16.00			
STA. 1+62.99 RT 31.00 - 3+27.99 RT 31.00	42A		165.00			
STA. 1+62.99 RT 17.00 - 1+62.99 RT 31.00	43A		16.00			
STA. 1+57.99 RT 12.00 - 1+62.99 RT 17.00	44A	5.0		8.00		
STA. 3+36.17 LT 37.00 - 3+92.67 LT 37.00	45A				57.00	
STA. 3+36.17 LT 37.00 - 3+36.17 LT 52.02	46A				15.00	
STA. 3+36.17 LT 52.02 - 3+92.67 LT 52.02	47A				57.00	
STA. 3+92.67 LT 37.00 - 3+92.67 LT 52.07	48A				15.00	
STA. 4+73.04 LT 37.00 - 5+19.39 LT 37.00	49A				47.00	
STA. 4+73.04 LT 37.00 - 4+73.04 LT 52.07	50A				15.00	
STA. 4+73.04 LT 52.07 - 5+19.39 LT 52.07	51A				47.00	
STA. 5+19.39 LT 37.00 - 5+19.39 LT 52.07	52A				15.00	
STA. 5+28.17 LT 37.00 - 5+83.28 LT 40.72	53A				65.00	
STA. 5+28.17 LT 37.00 - 5+28.17 LT 52.11	54A				15.00	
STA. 5+28.17 LT 52.11 - 5+81.09 LT 55.42	55A				65.00	
STA. 5+83.28 LT 40.72 - 5+81.09 LT 55.42	56A				15.00	
SUBTOTAL			~~1106~~ 1203.0	175	428.00	~~97~~ 0.0
Other			26.00	10.00		
ITEM SUBTOTAL			~~1106.0~~ 1229.0	~~175.0~~ 185.0	428.0	~~97.0~~ 0.0
ROUNDING			11.0	15.0	22.0	0.0
TOTAL			~~1117~~ 1240.0	~~190~~ 200.0	450	~~97~~ 0.0

PAVEMENT MARKINGS

ITEM NO.	632.0104	632.02	632.3118
ITEM	RETROREFLECTIVE PAINT PAVE. MARKING, 4" LINE	RETROREFLECTIVE PAINT PAVEMENT MARKING, SYMBOL OR WORD	RETROREFLECT. THERMOPLAST. PAVE. MARKING, 18" LINE
UNIT	L.F.	S.F.	L.F.
Exeter Rail Station	~~1,749~~ 1709.0	~~16~~ 8.0	~~12~~ 0.0
SUBTOTAL	~~1,749~~ 1709.0	~~16~~ 8.0	~~12~~ 0.0
ROUNDING	~~101~~ 0.0	~~4~~ 0.0	~~3~~ 0.0
TOTAL	~~1,850~~ 1709.0	~~20~~ 8.0	~~15~~ 0.0

SURFACING MATERIALS

ITEM NO.	304.2	304.3	403.11	403.12	628.2
ITEM	GRAVEL	CRUSHED GRAVEL	HOT BIT. PAVEMENT, MACHINE METHOD	HOT BIT. PAVEMENT, HAND METHOD	SAWED BITUMINOUS PAVEMENT
UNIT	C.Y.	C.Y.	TONS	TONS	LF
Exeter Rail Station	867.78	645	~~631.0~~ 574	~~37.61~~ 58.0	~~249~~ 229
SUBTOTAL	867.78	645	~~631.0~~ 574	~~37.61~~ 58.0	~~249~~ 229
ROUNDING	52.22	35	~~38.1~~ 0.0	~~2.39~~ 0.0	~~11~~ 0.0
TOTAL	920	680	~~670~~ 574	~~40~~ 58.0	~~260~~ 229

EARTHWORK

ITEM		CUBIC YARDS
COMMON EXCAVATION IN SECTIONS, EXCL. BLDRS. & CONC. PVMT		~~800~~ 972.0
DRIVE AND APPROACH EXCAVATION (COMMON)		0
RETAINING WALL EXCAVATION		~~50~~ 0.0
TOTAL COMMON EXCAVATION		~~800~~ 972.0
COMMON EXCAVATION FOR ESTIMATE	**ITEM 203.1**	~~850~~ 972.0
SECTIONS FILL		~~200~~ 256.0
DRIVE AND APPROACH FILL		0
TOTAL FILL		~~200~~ 256.0
EMBANKMENT-IN-PLACE FOR ESTIMATE	**ITEM 203.6**	~~200~~ 256.0
FROM MODULAR BLOCK RETAINING WALL SUMMARY		~~64~~ 119.0
GRANULAR FILL (ROADWAY) (F)	**ITEM 209.101**	~~64~~ 119.0

As-Built Plans

VHB *Vanasse Hangen Brustlin, Inc.*

QUANTITIES

DIRECTORY	FILENAME	FEDERAL PROJECT NO.	STATE PROJECT NO.	SHEET NO.	TOTAL SHEETS
\\NH_BED\51084\SSHEETS\	SUMMARY1		10025-A	7	43

SUMMARY OF QUANTITIES (ESTIMATED)

THIS INFORMATION IS FOR BIDDING PURPOSES ONLY

*** NOT AN ITEM TOTAL**

CLEARING & GRUBBING

ITEM NO.		SUBSIDIARY
DESCRIPTION		CLEARING & GRUBBING
UNIT		ACRE
LOCATION	DESIGNATED AREA	
STA. 1+53.77 LT 34.87 - 5+17.24 LT 40.47	A	0.220
SUBTOTAL		**0.22**

CONSTRUCTION SIGNS AND WARNING DEVICES (MINIMUM REQUIREMENTS)

ITEMS 619.1 - MAINTENANCE OF TRAFFIC

SIGN NO.	DESCRIPTION	SIZE	SQ. FT.	NO. REQ	TOTAL AREA	POSTS	EASELS	REMARKS
G20-2a	END ROAD WORK	2X4	8	2	16	4		
R5-8	SIDEWALK CLOSED	12X24	2	2	4			
R5-9	CROSSWALK CLOSED USE OTHER SIDE	12X24	2	2	4			
R50-1	NH LAW WORK ZONE SPEEDING	4X6	24	2	48	4		
W20-1b	ROAD WORK 500 FT	4X4	16	2	32	4		FLUORESCENT ORANGE
W20-1c	ROAD WORK 1000 FT	4X4	16	2	32	4		FLUORESCENT ORANGE
W20-1e	ROAD WORK 1/2 MILE	4X4	16	2	32	4		FLUORESCENT ORANGE

NOTE : ALL SIGNS MOUNTED ON POSTS SHALL BE CONSIDERED PERMANENT CONTROLS

TREE WORK

ITEM NO.	201.22
ITEM	REMOVING LARGE TREES
UNIT	EA
LOCATION	
STA. 1+89.41 RT 32.50	1.0
STA. 1+97.88 RT 34.51	1.0
STA. 2+38.22 RT 34.27	1.0
STA. 5+19.72 RT 47.97.	1.0
SUBTOTAL	4.0
ROUNDING	0.0
TOTAL	**4.0**

SIGNING

ITEM NO.	ITEM DESCRIPTION	UNIT	TOTAL
615.03	TRAFFIC SIGN TYPE C (F)	S.F.	15.25 ~~24.25~~
615.06	TRAFFIC SIGN TYPE CC (F)	S.F.	1.13

CONCRETE BOUNDS

ITEM NO.	622.2
ITEM	CONCRETE BOUNDS
UNIT	EACH
LOCATION	
EXETER RAIL STATION	
STA. 1+50.00, LT. 31.50	1
STA. 1+50.00, RT. 36.22	1
STA. 4+83.88, RT. 37.01	1
STA. 5+79.10, LT. 33.67	1
SUBTOTAL	**4**
ROUNDING	
TOTAL	**4**

As-Built Plans

QUANTITIES

VHB *Vanasse Hangen Brustlin, Inc.*

DIRECTORY	FILENAME	FEDERAL PROJECT NO.	STATE PROJECT NO.	SHEET NO.	TOTAL SHEETS
\\NH_BED\51084\SSHEETS\	SUMMARY2		10025-A	8	43

SUMMARY OF QUANTITIES (ESTIMATED)

THIS INFORMATION IS FOR BIDDING PURPOSES ONLY

*** NOT AN ITEM TOTAL**

LIGHTING

REF. LETTER	REF. LINE FOR CONDUIT RUN	ITEM NO. / DESCRIPTION	614.522 MOLDED PULL BOX 13 X 24 IN.		614.331 3" STEEL CONDUIT	614.7314 3" PVC PLASTIC CONDUIT, SCHEDULE 40	625.56 SHOE BOX LIGHTING	625.9 CONCRETE LIGHT POLE BASES SPECIAL TYPE	665.5 LIGHTING
		UNIT	EA		LF	LF	UNIT	EA	EA
		LOCATION							
		EXETER RAIL STATION							
A		STA. 4+75, RT 27							
B	A-B	STA 4+75, RT 27 - 4+77.72, RT 26.31	1		~~3~~ 6.0				
C	B-C	STA. 4+77.72, RT 26.31 - 4+76.70, LT 40.58	1			~~67~~ 154.0			
D	C-D	STA. 4+76.70, LT 40.58 - 4+78.99, LT 38.99				3	1	1	
E	C-E	STA. 4+76.70, LT 40.58 - 3+84.58, LT 39.96	1			92			
F	E-F	STA. 3+84.58, LT 39.96 - 3+87.77, LT 38.97				3	1	1	
G	E-G	STA. 3+84.58, LT 39.96 - 2+85.32, LT 41.15	1			100			
H	G-H	STA. 2+85.32, LT 41.15 - 2+88.11, LT 39.96				3	1	1	
I	G-I	STA. 2+85.32, LT 41.15 - 1+90.18, LT 41.16	1			95			
J	I-J	STA. 1+90.18, LT 41.16 - 1+87.99, LT 40.16				3	1	1	
K	C-K	STA. 4+76.70, LT 40.58 - 5+57.91, LT 40.18	1			82			
L	K-L	STA. 5+57.91, LT 40.18 - 5+60.30, LT 39.19				3	1	1	
M	E-M	STA. 3+84.58, LT 39.96 - 3+90.16, LT 48.32	1			10			
N	M-N	STA. 3+90.16, LT 48.32 - 3+87.97, LT 50.50				3		1	1
O	M-O	STA. 3+90.16, LT 48.32 - 3+42.38, LT 48.12	1			48			
P	O-P	STA. 3+42.38, LT 48.12 - 3+42.38, LT 50.31				3		1	1
Q	M-Q	STA. 3+90.16, LT 48.32 - 4+76.70, LT 47.75	1			86			
R	Q-R	STA. 4+76.70, LT 47.75 - 4+76.70, LT 50.13				3		1	1
S	Q-S	STA. 4+76.70, LT 47.75 - 5+34.23, LT 48.34	1			57			
T	S-T	STA. 5+34.23, LT 48.34 - 5+33.83, LT 50.13				3		1	1
U	S-U	STA. 5+34.23, LT 48.34 - 5+76.96, LT 50.18	1			51			
V	U-V	STA. 5+76.96, LT 50.18 - 5+78.02, LT 52.72				3		1	1
W	W-X	STA. 3+28.17, LT 58.4 - 4+04.49, LT 58.4	1			76			
Y	Y-Z	STA. 4+51.92, LT 58.4 - 5+28.17, LT 58.4	1			76			
		SUBTOTAL	13		~~3~~ 6.0	~~870~~ 957.0	5	10	5
		ROUNDING				~~20~~ 0.0			
		Other	1.0			325.0			
		TOTAL	~~13~~ 14.0		~~3~~ 6.0	~~890~~ 1282.0	5	10	5

SIDEWALK

ITEM NO.	209.4	608.24
ITEM	GRANULAR BACKFILL (GRAV)	4" CONCRETE SIDEWALK
UNIT	C.Y	S.Y.
Exeter Rail Station	122.67	1020.75
SUBTOTAL	**122.67**	**1020.75**
ROUNDING	**27.33**	**59.25**
TOTAL	**150**	**1080**

GUARDRAIL

ITEM NO.		606.5166
ITEM		WOOD GUARDRAIL
UNIT		L.F.
REF NO.	#	
	EXETER RAIL STATION	
1A	STA. 2+66.63 - STA. 3+30.93, RT	~~84~~ 60.0
2A	STA. 3+43.12 - STA. 4+63.31, RT	~~120~~ 112.0
	SUBTOTAL	~~184~~ 172.0
	ROUNDING	~~16~~ 0.0
	TOTAL	~~200~~ 172.0

FORCE ACCOUNT

POLE RELOCATIONS - EXETER HAMTON ELECTRIC

INCIDENTAL ITEMS

ITEM NO.	ITEM DESCRIPTION	UNIT	TOTAL
203.35	HANDLING EXCAVATED, CONTAMINATED SOILS	C.Y.	~~100~~ 0.0
214	FINE GRADING	UNIT	1
506.2	STEEL SHEET PILING	LB	~~8700~~ 9368.0
607.662	CHAIN LINK FENCE W / ALUMINUM COATED STEEL FABRIC 6' HIGH	LF	~~52~~ 48.7
607.81269	12' OPENING CHAIN LINK DBL. SLIDING GATE, ALUMINUM COATED STEEL, 6' HIGH	UNIT	1
615.5	STATION ID SIGN	EA	2
618.7	FLAGGERS	HR	~~120~~ 0.0
619.1	MAINTENANCE OF TRAFFIC	LS	~~1~~
645.51	HAYBALES FOR TEMPORARY EROSION CONTROL	EA	~~30~~ 0.0
661.25	BENCH	EA	4
661.65	WASTE RECEPTACLE	EA	2
670.1	COMPOSITE PRECAST CONCRETE TACTILE PAVERS	S.F.	320
670.44	GRANITE BOLLARD	EA	2
670.5	BIKE STAND	EA	6
692	MOBILIZATION	U	1
624	RAILROAD PROTECTION	U	1
660.17	HIGH PLATFORM AND CANOPY	U	1
698.13	FIELD OFFICE, TYPE C	U	1
699	TEMPORARY PROJECT WATER POLLUTION CONTROL	$	1
1008.1	ALTERATIONS AND ADDITIONS AS NEEDED - STATION SIGNS	$	1
1008.2	ALTERATIONS AND ADDITIONS AS NEEDED - RAILROAD INSPECTION	$	1
1009.1	PROJECT HEALTH & SAFETY PLAN	$	~~1~~ 0.0
1009.2	TREATMENT OR DISPOSAL OF CONTAMINATED SOIL/GROUNDWATER	$	~~1~~ 0.0

SUBSIDIARY ITEMS

DESCRIPTION
REMOVAL OF EXISTING CONCRETE BOUNDS
EMULSIFIED ASPHALT FOR TACK COAT
PLUG AND ABANDON PIPES
CLEARING AND GRUBBING
REMOVAL OF EXISTING PIPES

NOTE :
THIS LIST OF SUBSIDIARY ITEMS SHOULD NOT BE CONSIDERED A COMPLETE DIGEST OF THE SUBSIDIARY WORK PRESENT ON THIS PROJECT. REFER TO PLANS, PROPOSAL, SPECIAL PROVISIONS, AND STANDARD SPECIFICATIONS.

As-Built Plans

VHB *Vanasse Hangen Brustlin, Inc.*

QUANTITIES

DIRECTORY	FILENAME	FEDERAL PROJECT NO.	STATE PROJECT NO.	SHEET NO.	TOTAL SHEETS
\\NH_BED\51084\SSHEETS\	SUMMARY3		10025-A	9	43

SUMMARY OF QUANTITIES (ESTIMATED)

THIS INFORMATION IS FOR BIDDING PURPOSES ONLY

* NOT AN ITEM TOTAL

SUMMARY OF PLANT RELATED ITEMS

ITEM	BOTANICAL NAME	COMMON NAME	SIZE	UNIT	QUANTITY	REMARKS
652.69601	QUERCUS RUBRA	RED OAK	2 1/2" CAL. B&B	E.A.	~~10~~ 11.0	
652.13601	ACER X FREEMANII	AUTUMN BLAZE MAPLE	2 1/2" CAL. B&B	E.A.	4	
652.87061	STEWARTIA KOREANA	KOREAN STEWARTIA	6' B&B	E.A.	5	
654.22051	ILEX CRENATA 'CONVEXA'	CONVEX JAPANESE HOLLY	3' B&B	E.A.	36	
654.87051	TAXUS X MEDIA 'DENSIFORMIS'	DENSE SPREADING YEW	3' B&B	E.A.	~~94~~ 94.0	
656.30032	RHUS AROMATICA 'GROW LOW'	GROW LOW SUMAC	2' POT. CONT.	E.A.	~~20~~ 33.0	
656.82061	VIBURNUM DENTATUM	ARROWWOOD	4' B&B	E.A.	~~14~~ 13.0	
657.85092	VINCA MINOR	COMMON PERIWINKLE	6" POT. CONT.	E.A.	~~57~~ 78.0	

MODULAR BLOCK RETAINING WALL

DESCRIPTION	206.1 COMMON STRUCTURE EXCAVATION	209.101 GRANULAR BACKFILL (ROADWAY) (F)	592.5 MODULAR BLOCK RETAINING WALL	641 LOAM
	CY	CY	SF	CY
SOUTHERLY WALL				
STA. 2+64.38, RT 34.5-STA 3+31.28, RT 34.5	~~26~~	~~41~~	~~351.6~~ 450.6	3
NORTHERLY WALL				
STA. 3+43.01 RT 34.5 - 4+63.99 RT 34.5	~~18~~	~~28~~	~~388.8~~ 595.0	4
SUBTOTAL	~~44~~ 109.0	~~64~~ 119.0	~~740.4~~ 1046.0	7
ROUNDING			~~9.6~~ 0.0	
ITEM TOTAL	0*	0**	~~750~~ 1046.0	0***

* SEE DRAINAGE SUMMARY
** SEE EARTHWORK SUMMARY
*** SEE LANDSCAPE & SLOPE PROTECTION SUMMARY

LANDSCAPING AND SLOPE PROTECTION

ITEM NO.	641	645.154	646.31
ITEM	LOAM	BARK MULCH 4" DEEP	TURF ESTABLISHMENT W/ MULCH & TACKIFIERS
UNIT	C.Y	S.Y	S.Y.
Exeter Rail Station	~~286~~ 153.0	~~436~~ 540.0	~~302~~ 683.0
SUBTOTAL	~~286.0~~ 153.0	~~436.5~~ 540.0	~~301.0~~ 683.0
ROUNDING	~~0.0~~ 0.0	~~23.5~~ 0.0	~~18.4~~ 0.0
FROM MODULAR BLOCK RETAINING WALL SUMMARY	7		
TOTAL	~~303.0~~ 160.0	~~460~~ 540.0	~~400~~ 683.0

As-Built Plans

VHB *Vanasse Hangen Brustlin, Inc.*

DIRECTORY	FILENAME	FEDERAL PROJECT NO.	STATE PROJECT NO.	SHEET NO.	TOTAL SHEETS
\\NH_BED\51084\SSHEETS\	SUMMARY4		10025-A	10	43

QUANTITIES

SUMMARY OF QUANTITIES (ESTIMATED)

THIS INFORMATION IS FOR BIDDING PURPOSES ONLY

* NOT AN ITEM TOTAL

ITEM NO.		206.10	202.5	603.00212	604.0007	604.12		604.55	604.242	603.83212	
ITEM DESCRIPTION		COMMON STRUCTURE EXCAVATION	REMOVAL OF C.B.'S, D.I.'S, AND M.H.'S	R.C. PIPE, 2000D	POLYETHYLENE LINER	CATCH BASINS		ADJUSTING M.H. COVERS AND FRAMES	Drop Inlets, Type D-B	12" Plastic Pipe (Smooth Interior)	REMARKS
				12"		TYPE B ACT.	TYPE B EST.				
UNIT		C.Y.	EA.	L.F.	EA.	U	U	EA.	U	LF	
NOTE NO.	LOCATION										
	EXETER RAIL STATION										
1	STA. 3+32.97, LT 16.95			18.0				1			
2	STA. 3+03.91, RT 28.98 TO STA. 3+45.46, RT 28.98	~~0.36~~ 0.0		~~40~~ 34.0	1	~~1~~ 1.4	1				
3	STA. 3+45.46, RT 28.98 TO STA 4+61.20, RT 29.23	~~2.02~~ 0.0		~~114~~ 120.0	1	~~1~~ 1.5	1				
4	STA. 4+61.20, RT 29.23 TO STA 5+00.00, RT 41.92	~~1.18~~ 0.0		~~41~~ 34.0	1	~~1~~ 1.4	1		1.0	18.0	
5	STA. 5+00.00, RT 41.92 TO STA 5+32.50, RT 29.87			~~35~~ 30.0	1	~~1~~ 1.1	1		1.0	10.0	
6	STA. 5+32.50, RT 29.87				1	~~1~~ 1.1	1				
7	STA. 4+63.23, RT 29.77 TO STA 5+32.50, RT 29.87		1								
8	STA 4+71.99, RT 23.63 TO STA 4+92.65, RT 22.86		1								
9	STA 5+66.10, RT 19.51		1								
10	STA 3+38.38, RT 16.70							1			
	SHEET SUBTOTAL A	~~4.48~~ 0.0	3	236.2 ~~290~~	5	~~5~~ 6.5	5	2	2.0	28.0	
	FROM MODULAR BLOCK RETAINING WALL SUMMARY	~~44~~ 109.0									
	ROUNDING	~~0.54~~ 109.0	0	~~10~~ 0.0	0	0	0	0	0	0	
	TOTAL	~~49~~ 109.0	3	~~240~~ 236.2	5	~~9~~ 6.5	5	2	2.0	28.0	

As-Built Plans

VHB *Vanasse Hangen Brustlin, Inc.*

DRAINAGE SUMMARY

DIRECTORY	FILENAME	FEDERAL PROJECT NO.	STATE PROJECT NO.	SHEET NO.	TOTAL SHEETS
\\NH_BED\51084\SSHEETS\	DRAINAGE		10025-A	11	43

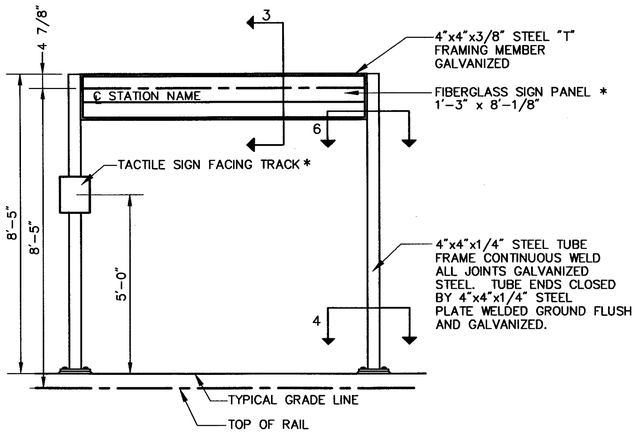

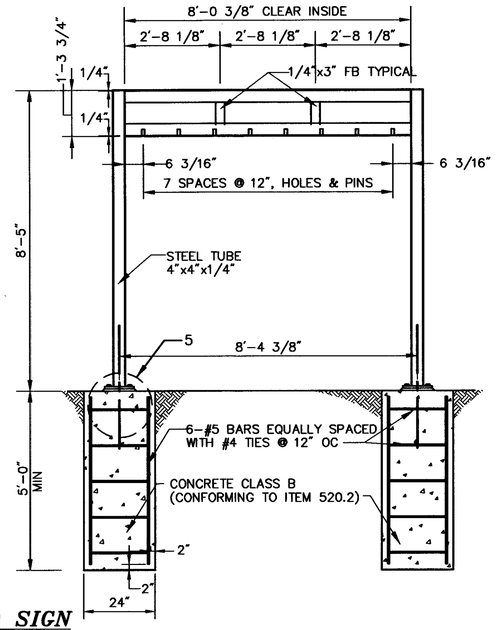

ITEM 615.5 – STATION ID SIGN

NOT TO SCALE

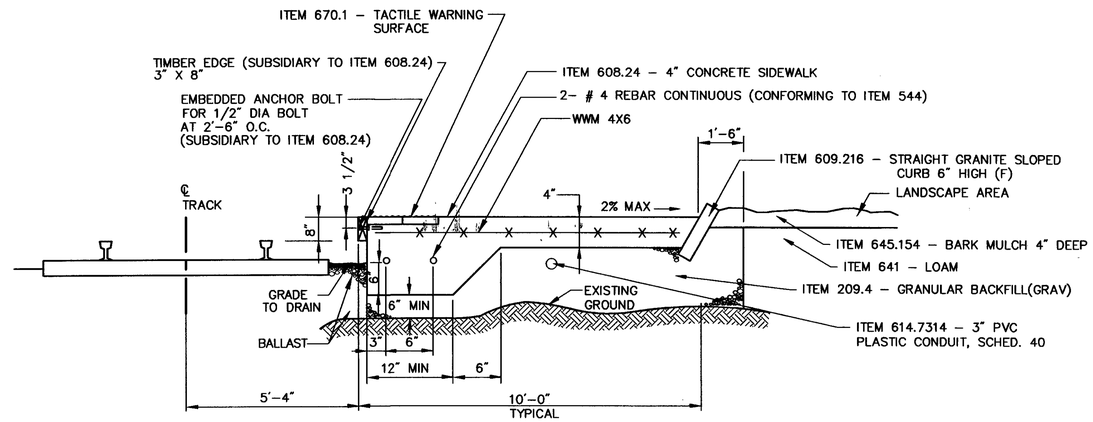

LOW PLATFORM DETAIL

NOT TO SCALE

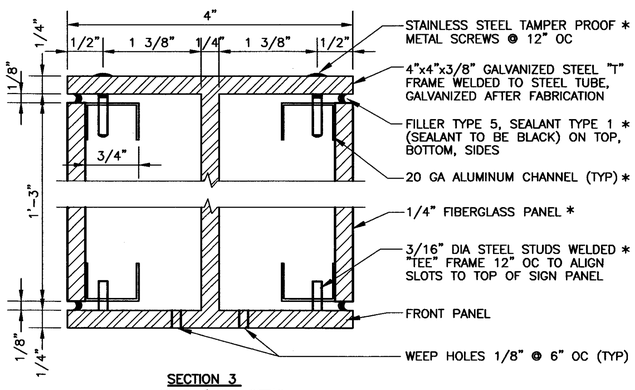

SECTION 3
HEAD / SILL DETAIL
NOT TO SCALE

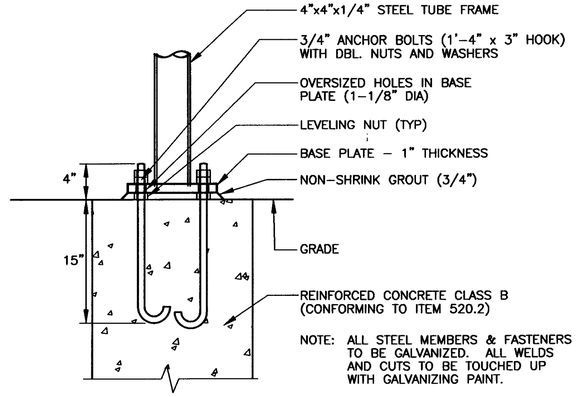

NOTE: ALL STEEL MEMBERS & FASTENERS TO BE GALVANIZED. ALL WELDS AND CUTS TO BE TOUCHED UP WITH GALVANIZING PAINT.

SECTION 5
BASE SECTION DETAIL
NOT TO SCALE

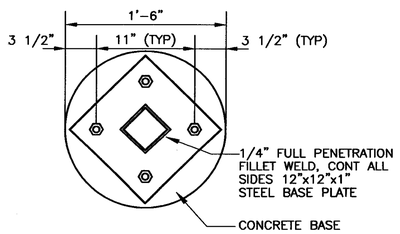

SECTION 4
BASE PLAN DETAIL
NOT TO SCALE

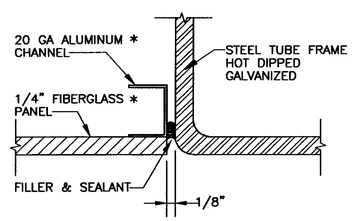

SECTION 6
SIGN PANEL / FRAME CONNECTION
NOT TO SCALE

* NOTE
FIBERGLASS SIGN PANEL AND ASSOCIATED HARDWARE WILL BE PAID FOR UNDER 1008.1 – ALTERATIONS AND ADDITIONS AS NEEDED – STATION SIGNS

STATE OF NEW HAMPSHIRE

PASSENGER RAIL STATION – EXETER, N.H.

STATION ID SIGN & LOW PLATFORM DETAILS

VHB Vanasse Hangen Brustlin, Inc.

REVISION DATE	DRAWING NAME	SHEET SCALE	FEDERAL PROJECT NO.	STATE PROJECT NO.	SHEET NO.	TOTAL SHEETS
NOV 10, 2000	51084DET1	AS SHOWN		10025-A	12	43

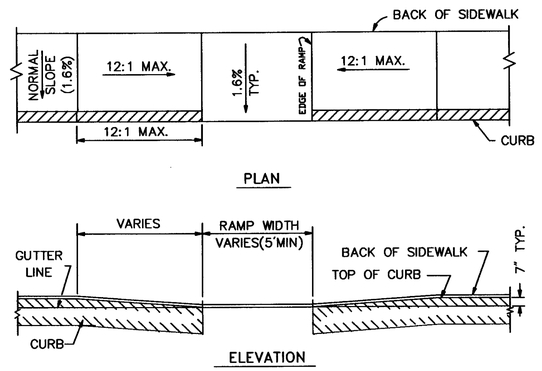

PARALLEL SIDEWALK RAMP

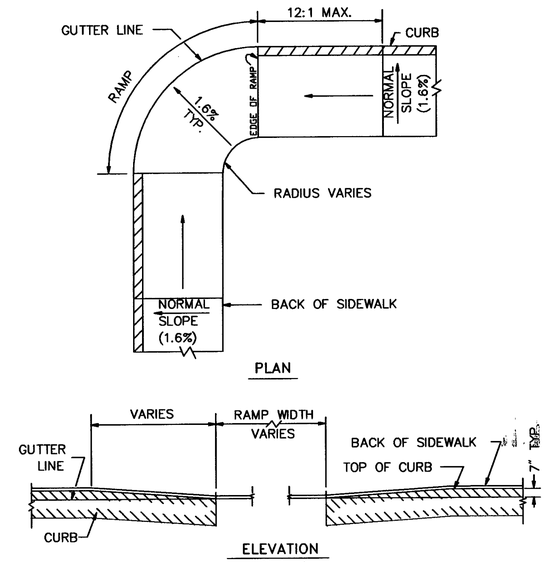

CORNER SIDEWALK RAMP

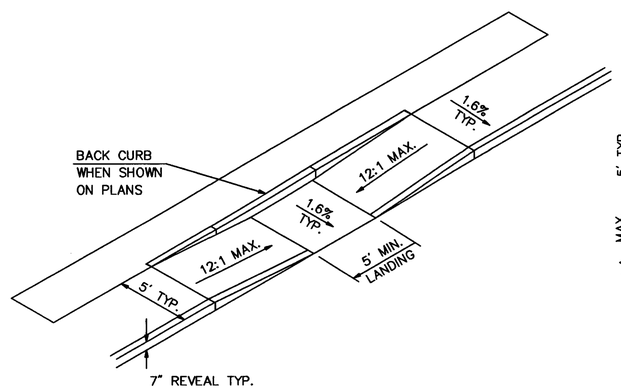

PARALLEL RAMP WITH BACK CURB

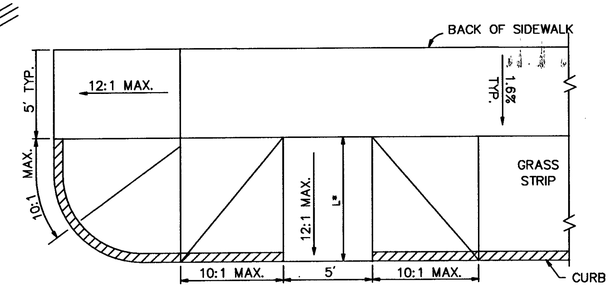

PARALLEL RAMP WITH GRASS PANEL

* LENGTH OF RAMP VARIES WITH SLOPE & WIDTH OF GRASS PANEL

GENERAL NOTES

1. THE MAXIMUM RUNNING SLOPE OF ANY SIDEWALK CURB RAMP IS 12:1, THE MAXIMUM CROSS-SLOPE IS 2%. THE SLOPE OF THE LANDING SHALL NOT EXCEED 2% IN ANY DIRECTION.
2. TRANSITIONS SHALL BE FLUSH AND FREE OF ABRUPT CHANGES. ROADWAY SHOULDER SLOPES ADJOINING SIDEWALK CURB RAMPS SHALL BE A MAXIMUM OF 5% (FULL WIDTH) FOR A DISTANCE OF 2 FT. FROM THE ROADWAY CURBLINE.
3. INTERCEPT DRAINAGE ALONG THE CURB IN ADVANCE OF SIDEWALK CURB RAMPS OR LANDINGS. CATCH BASINS, MANHOLES, ECT. SHALL NOT BE LOCATED IN, OR AT THE BASE OF, SIDEWALK CURB RAMPS OF LANDINGS.
4. THE BOTTOM OF THE SIDEWALK CURB RAMP OR LANDING, EXCLUSIVE OF THE FLARED SIDES, SHALL BE WHOLLY CONTAINED WITHIN THE CROSSWALK MARKINGS.

STATE OF NEW HAMPSHIRE

PASSENGER RAIL STATION – EXETER, N.H.

SIDEWALK RAMP DETAILS

VHB Vanasse Hangen Brustlin, Inc.

REVISION DATE	DRAWING NAME	SHEET SCALE	FEDERAL PROJECT NO.	STATE PROJECT NO.	SHEET NO.	TOTAL SHEETS
NOV 10, 2000	51084DET2	AS SHOWN		10025-A	13	43

NOTE: REFER TO PAVEMENT LAYOUT PLANS AND CROSS-SECTIONS FOR DRIVEWAY LENGTHS, WIDTHS, RADII, CURB CUTS, GRADES, AND PAVE*****

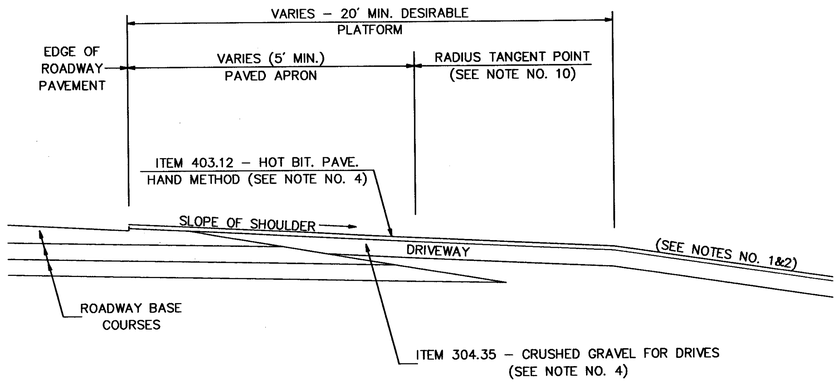

TYPICAL UNCURBED DRIVE IN FILL SECTION

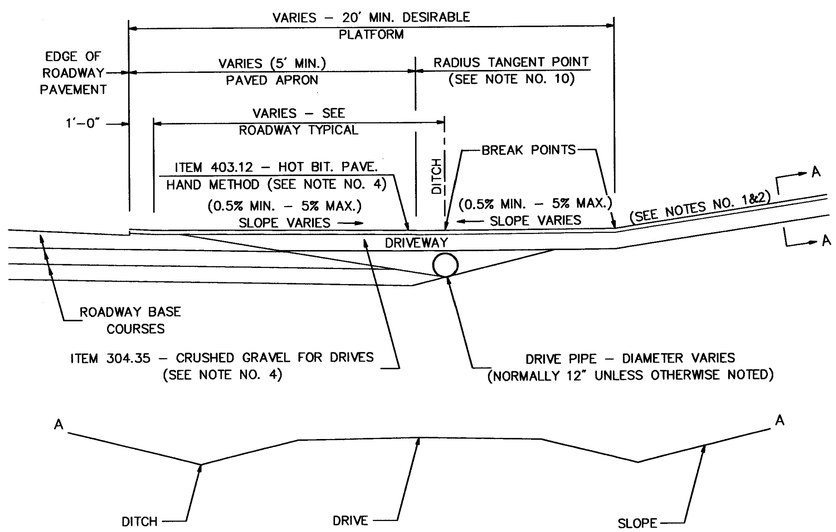

A – A DRIVEWAY CROSS-SECTION

TYPICAL UNCURBED DRIVE IN CUT SECTION

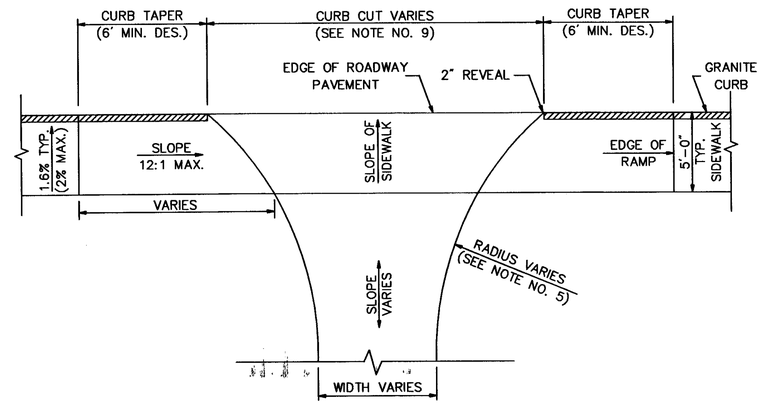

PLAN VIEW WITH SIDEWALK RAMP

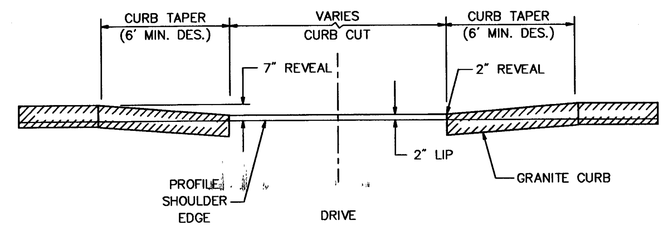

END VIEW

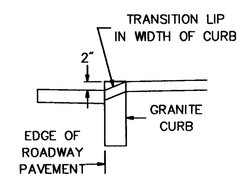

LIP DETAIL

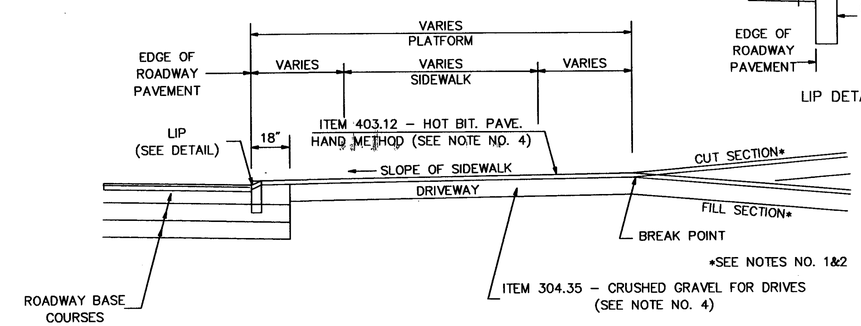

TYPICAL URBAN CURBED DRIVE IN CUT/FILL SECTION

GENERAL NOTES

1. GRADES OF MAJOR ENTRANCES BEYOND THE PLATFORM SHOULD NOT EXCEED 8%.
2. GRADES OF OTHER DRIVES BEYOND THE PLATFORM SHOULD NOT EXCEED 15%.
3. THE ALGEBRAIC DIFFERENCE BETWEEN TWO ADJACENT GRADES SHOULD NOT EXCEED 10%.
4. PAVEMENT & BASE COURSE DEPTHS FOR RESIDENTIAL DRIVES ARE TYPICALLY 8" CRUSHED GRAVEL WITH 2" H.B.P. (HAND METHOD) SINGLE COURSE. FOR COMMERCIAL/INDUSTRIAL DRIVES WITH FREQUENT HEAVY TRUCK TRAFFIC, 12" CRUSHED GRAVEL WITH 3" H.B.P. SHOULD BE USED.
5. FOR DESIGN CRITERIA AND OTHER ADDITIONAL INFORMATION, REFER TO THE NHDOT DRIVEWAY MANUAL.
6. DITCHES ARE RECOMMENDED FOR UNCURBED DRIVEWAYS IN CUT SLOPES.
7. USE SLOPED END SECTIONS ON DRIVE PIPES FOR UNCURBED DRIVEWAYS.
8. CURBING CAN BE FLARED TO FIT DRIVE RADII IF APPROPRIATE OR ENDED AS DETAILED ABOVE.
9. CURB CUTS FOR RESIDENTIAL DRIVES WITH ANGLES OF ENTRY OF 75°–90°ARE TYPICALLY 25'.
10. FOR UNPAVED DRIVES, THE PAVED APRON NORMALLY ENDS AT THE RADIUS TANGENT POINT. SEE PAVEMENT LAYOUT PLANS.

STATE OF NEW HAMPSHIRE

PASSENGER RAIL STATION – EXETER, N.H.

DRIVEWAY DETAILS

VHB Vanasse Hangen Brustlin, Inc.

REVISION DATE	DRAWING NAME	SHEET SCALE	FEDERAL PROJECT NO.	STATE PROJECT NO.	SHEET NO.	TOTAL SHEETS
NOV 10, 2000	51084DET3	AS SHOWN		10025–A	14	43

CENTERLINE AND EDGE LINE "CUTS" AT SIDE ROAD

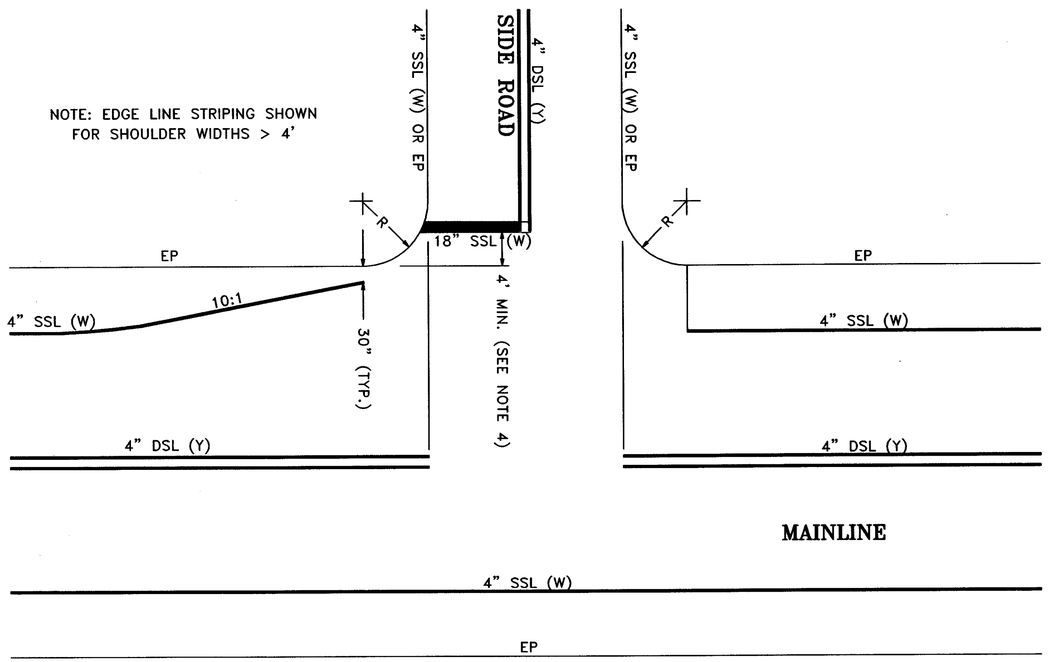

CENTERLINE AND EDGE LINE "CUTS" AT SIDE ROAD

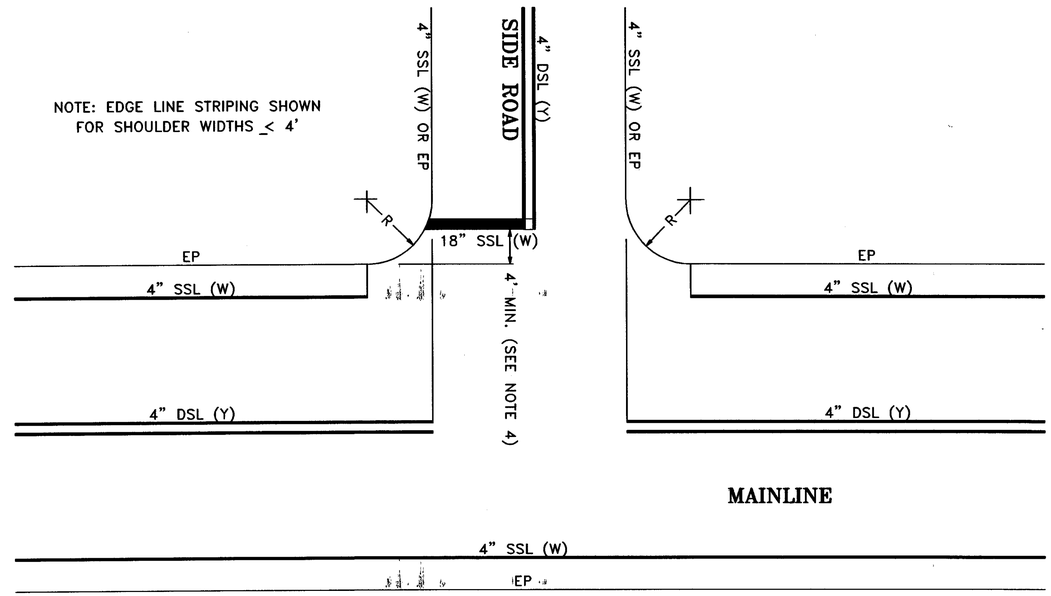

CENTERLINE AND EDGE LINE "CUTS" AT SIDE ROAD WITH TURN LANES

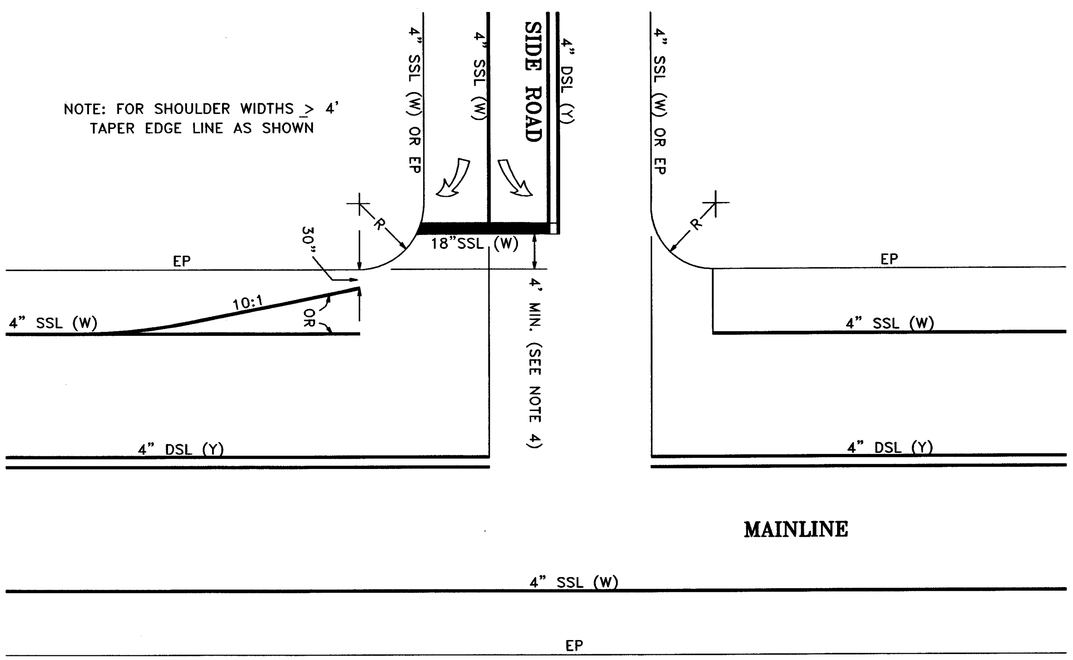

GENERAL NOTES

1. EDGE LINE DETAILS SHOWN ARE FOR MAINLINE ROADWAYS WITHOUT TURN LANES. THE PRESENCE OF TURN LANES MAY REQUIRE DIFFERENT EDGE LINE TREATMENTS.
2. EDGE LINES ON SIDE ROADS, WHEN CALLED FOR, SHALL FOLLOW THE ABOVE MAINLINE TYPICALS. EDGE LINES SHALL NOT BE CONTINUOUS AROUND THE MAINLINE/ SIDE ROAD RADIUS.
3. CENTERLINE SHALL BE CONTINUOUS PAST DRIVEWAYS. CENTERLINE MAY OR NOT MAY BE CONTINUOUS THROUGH MINOR SIDE ROAD OR PRIVATE ROAD INTERSECTIONS. CONTACT BUREAU OF TRAFFIC.
4. LOCATION OF THE STOP LINE MAY VARY DUE TO INTERSECTION SIGHT DISTANCE AND VEHICLE TURNING RADIUS, AND MAY NOT COINCIDE WITH THE LOCATION OF THE STOP SIGN.

LEGEND

SSL = SINGLE SOLID LINE (COLOR)
DSL = DOUBLE SOLID LINE (COLOR)
DL = DOUBLE LINE – SOLID W/BROKEN (COLOR) (NOT SHOWN)
SBL = SINGLE BROKEN LINE (COLOR) (NOT SHOWN)
DBL = DOUBLE BROKEN LINE (COLOR) (NOT SHOWN)
EP = EDGE OF PAVEMENT

STATE OF NEW HAMPSHIRE

PASSENGER RAIL STATION – EXETER, N.H.

MINOR INTERSECTION DETAILS

VHB Vanasse Hangen Brustlin, Inc.

REVISION DATE	DRAWING NAME	SHEET SCALE	FEDERAL PROJECT NO.	STATE PROJECT NO.	SHEET NO.	TOTAL SHEETS
NOV 10, 2000	51084DET4	AS SHOWN		10025-A	15	43

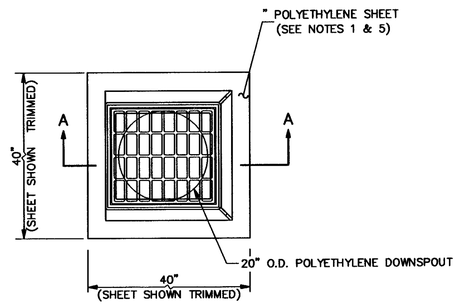

PLAN

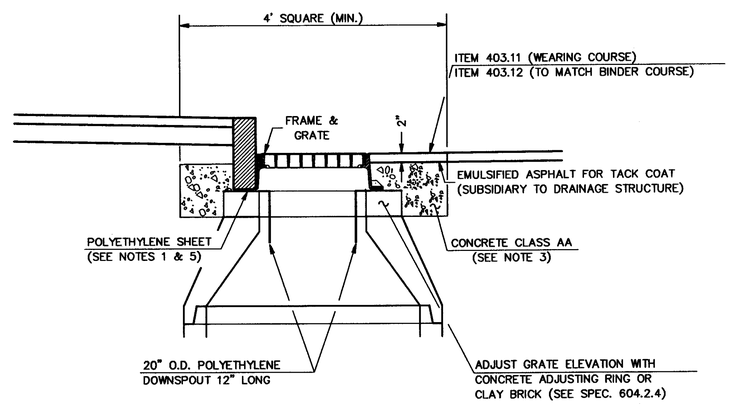

SECTION A–A

GENERAL NOTES

1. POLYETHYLENE LINER SHALL BE FABRICATED AT THE SHOP. DOWNSPOUT SHALL BE EXTRUSION FILLET WELDED TO THE POLYETHYLENE SHEET.
2. PLACE A CONTINUOUS BEAD OF AN APPROVED SILICONE SEALANT BETWEEN FRAME AND POLETHYLENE SHEET.
3. PLACE CLASS AA CONCRETE TO 2" BELOW THE TOP OF GRATE ELEVATION (SUBSIDIARY TO DRAINAGE STRUCTURE).
4. USE ON DRAINAGE STRUCTURES 4' MIN. DIAMETER ONLY.
5. TRIM POLYETHYLENE SHEET A MAXIMUM OF 4" OUTSIDE THE FLANGE ON THE FRAME FOR THE CATCH BASIN BEFORE PLACING CONCRETE (EXCEPT AS SHOWN WHEN USED WITH CURB).
6. THE CENTER OF THE GRATE & FRAME MAY BE SHIFTED A MAXIMUM OF 6" FROM THE CENTER OF THE DOWNSPOUT IN ANY DIRECTION.

ITEM 604.0007 – POLYETHYLENE LINER DETAIL

STATE OF NEW HAMPSHIRE

PASSENGER RAIL STATION – EXETER, N.H.

DRAINAGE DETAILS

VHB Vanasse Hangen Brustlin, Inc.

REVISION DATE	DRAWING NAME	SHEET SCALE	FEDERAL PROJECT NO.	STATE PROJECT NO.	SHEET NO.	TOTAL SHEETS
NOV 10, 2000	51083DET5	AS SHOWN		10025–A	16	43

PLANTING DETAILS

Not To Scale

NHDOT
NEW HAMPSHIRE
DEPARTMENT OF TRANSPORTATION
BUREAU OF HIGHWAY DESIGN
ROADSIDE DEVELOPMENT

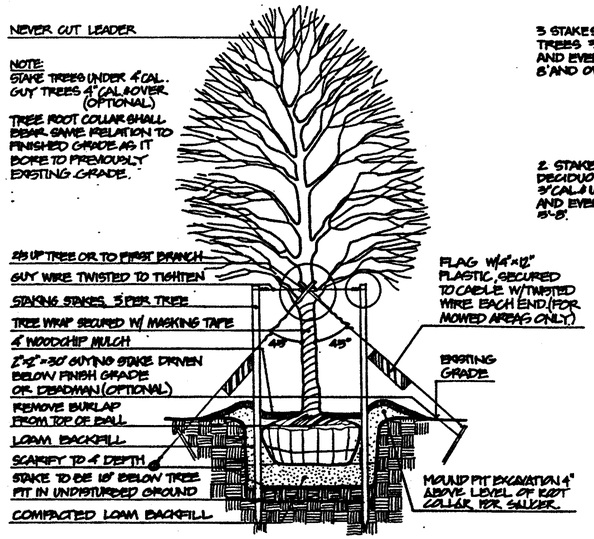

TREE PLANTING

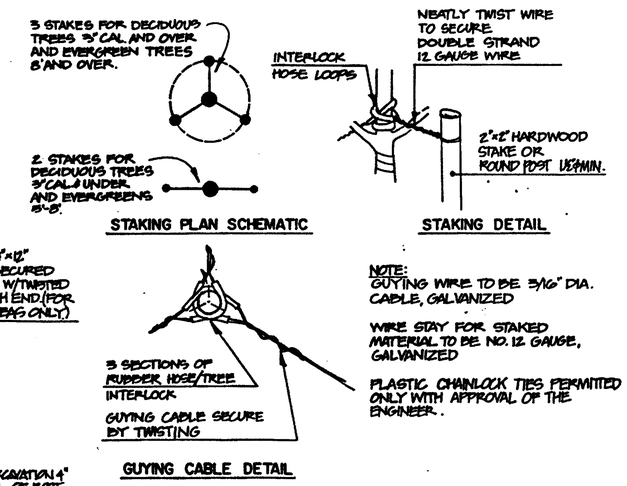

TREE STAKING AND GUYING

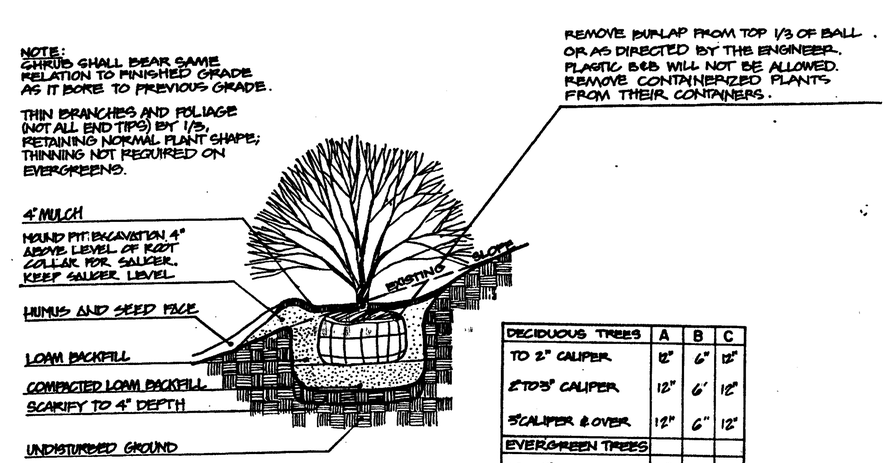

SHRUB PLANTING

DECIDUOUS TREES	A	B	C
TO 2" CALIPER	12"	6"	12"
2" TO 3" CALIPER	12"	6"	12"
3" CALIPER & OVER	12"	6"	12"
EVERGREEN TREES			
TO 8'	12"	6"	12"
8' AND OVER	12"	6"	12"
SHRUBS	12"	6"	12"
VINES, GROUNDCOVER AND PLANTING BEDS	AS PER PLANS & SPECIFICATIONS		

PLANTING PIT SIZES

NOTE: GUYING TREES OPTIONAL FOR USE WITH 4" TREES, ONLY AT THE PROJECT ENGINEERS' DISCRETION.

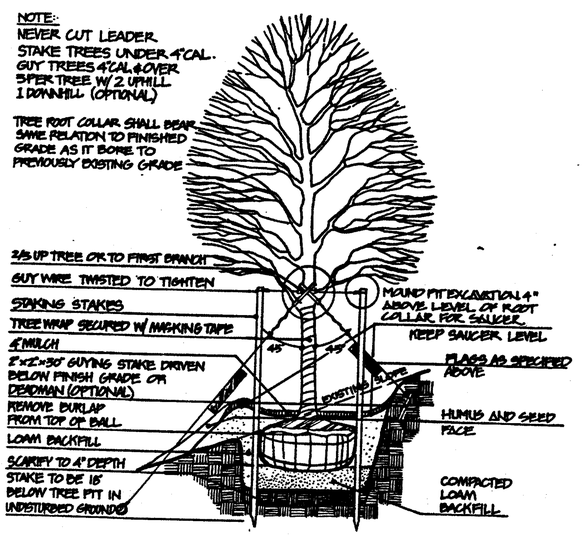

TREE PLANTING ON SLOPE

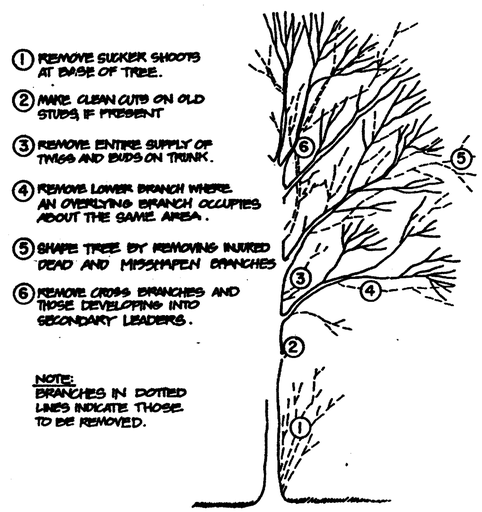

TREE PRUNING

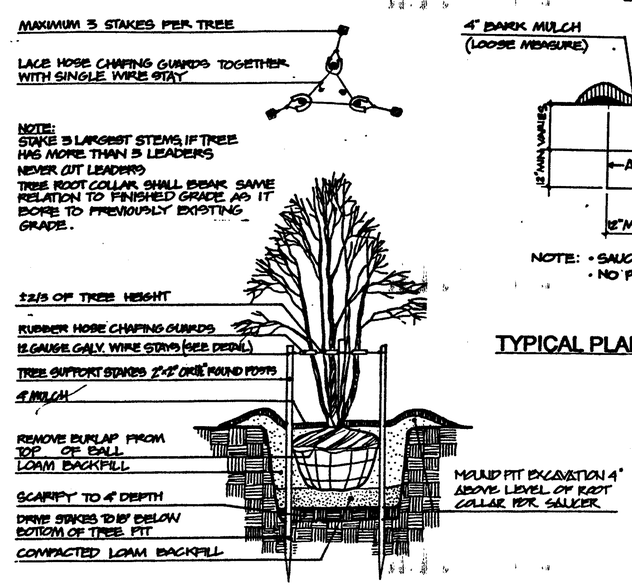

MULTI-STEM TREE PLANTING

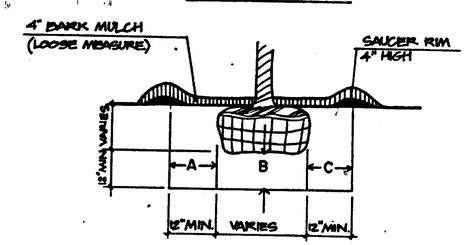

NOTE: • SAUCERS TO BE TAMPED
• NO PLASTIC BALL WRAP TO BE USED.

TYPICAL PLANTING PIT INFORMATION

STATE OF NEW HAMPSHIRE

PASSENGER RAIL STATION – EXETER, N.H.

LANDSCAPING DETAILS

VHB Vanasse Hangen Brustlin, Inc.

REVISION DATE	DRAWING NAME	SHEET SCALE	FEDERAL PROJECT NO.	STATE PROJECT NO.	SHEET NO.	TOTAL SHEETS
NOV 10, 2000	51084DET6	AS SHOWN		10025-A	17	43

PLANTING DETAILS

Not To Scale

NHDOT
NEW HAMPSHIRE
DEPARTMENT OF TRANSPORTATION
BUREAU OF HIGHWAY DESIGN
ROADSIDE DEVELOPMENT

NOTE:
TREE ROOT COLLAR SHALL BEAR SAME RELATION TO FINISHED GRADE AS IT BORE TO PREVIOUS GRADE.

STAKE ALL EVERGREENS OVER 3' HIGH. FOR EVERGREENS 3' & UNDER - ENGINEER'S DISCRETION.

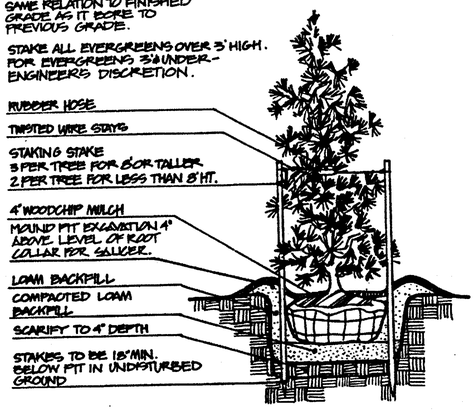

EVERGREEN TREE PLANTING

NOTE:
TREE ROOT COLLAR SHALL BEAR SAME RELATION TO FINISHED GRADE AS IT BORE TO PREVIOUS GRADE.

STAKE ALL EVERGREENS OVER 3' HIGH FOR EVERGREENS 3' & UNDER - ENGINEER'S DISCRETION.

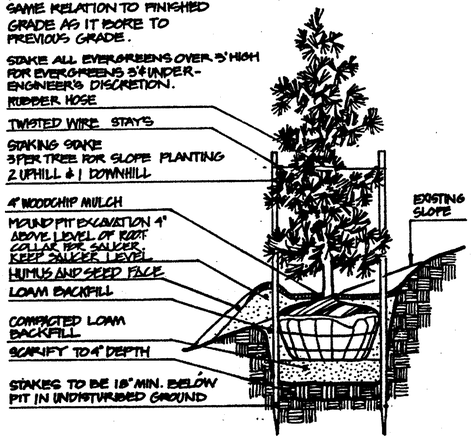

EVERGREEN TREE PLANTING ON SLOPE

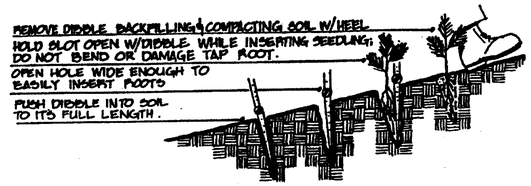

SEEDLINGS (EVERGREEN)

NOTE:
D = DIMENSION OF PLANT SPACING (SHRUB OR GROUND COVER AS INDICATED ON PLANS)

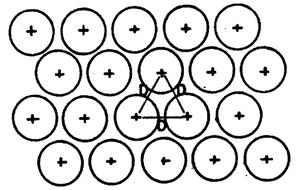

TYPICAL BED PLANT SPACING

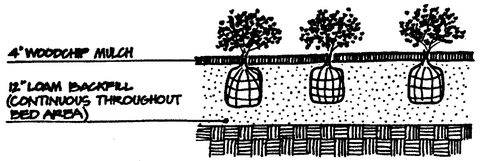

GROUNDCOVER BED PLANTING

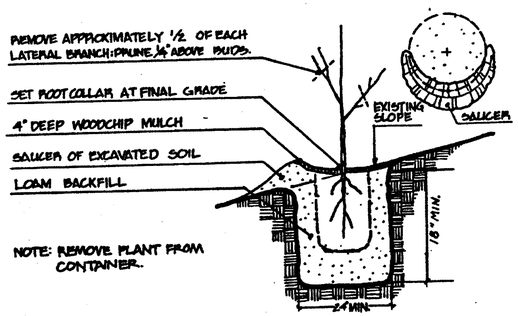

NOTE: REMOVE PLANT FROM CONTAINER.

LINER PLANTING (DECIDUOUS)

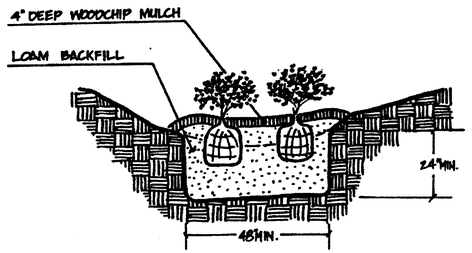

TRENCH NARROW MEDIAN PLANTING

SOIL MIX FOR LINERS OR SPECIAL USE

1 c.y. LOAM
2 c.y. PEAT
2 c.y. COW MANURE (WELL ROTTED)
200 lbs. LIMESTONE
150 lbs. FERTILIZER 10-6-4 (50% WIN)
5 GAL. OF THIS MIXTURE SHALL BE INCORPORATED INTO THE EXISTING SOIL AT EACH PLANT PIT

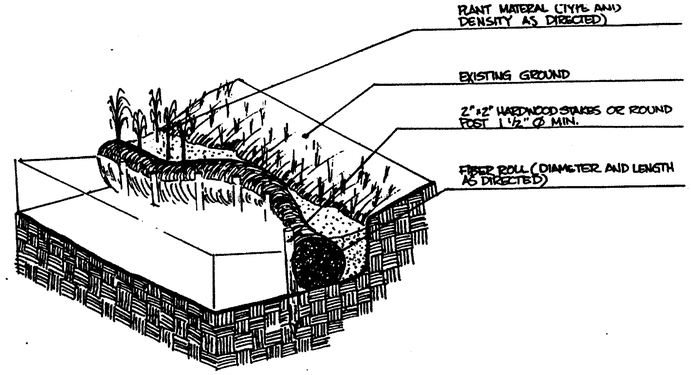

WETLAND FIBER ROLL PLACEMENT

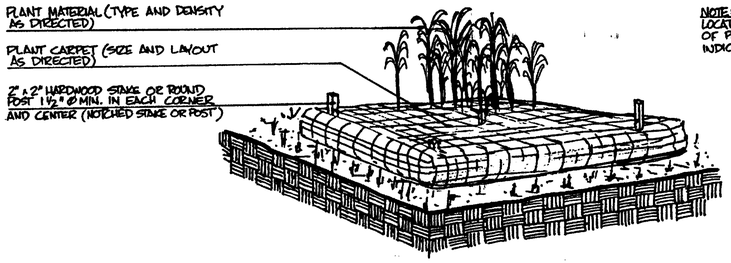

NOTE:
LOCATION, DIMENSIONS AND LAYOUT OF PLANT CARPETS ARE AS INDICATED ON PLAN SHEETS.

WETLAND PLANT PALLET PLACEMENT

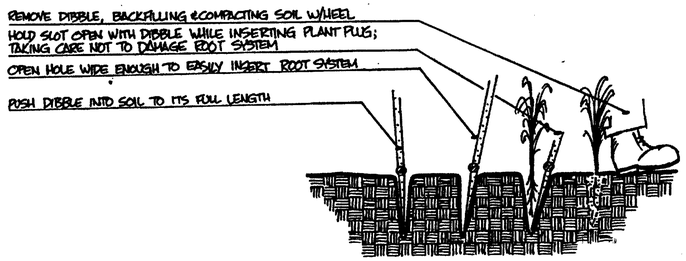

NOTE:
LOCATION, SIZE AND SPACING OF PLANT PLUGS ARE AS INDICATED ON PLAN SHEETS.

WETLAND PLANT PLUG PLACEMENT

STATE OF NEW HAMPSHIRE

PASSENGER RAIL STATION – EXETER, N.H.

LANDSCAPE DETAILS

VHB Vanasse Hangen Brustlin, Inc.

REVISION DATE	DRAWING NAME	SHEET SCALE	FEDERAL PROJECT NO.	STATE PROJECT NO.	SHEET NO.	TOTAL SHEETS
NOV 10, 2000	51084DET7	AS SHOWN		10025-A	18	43

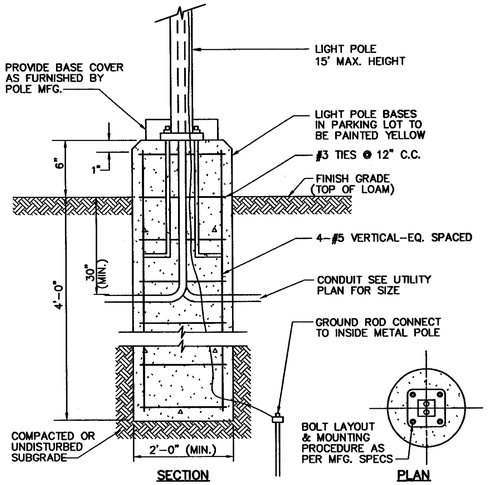

1. ELECTRICAL CONTRACTOR SHALL FURNISH POLE BASE TEMPLATE AND ANCHOR BOLTS TO GENERAL CONTRACTOR PRIOR TO CONCRETE POUR.

2. PROVIDE GROUNDING BUSHINGS PER NEC.

3. RUBBED FINISH ALL EXPOSED CONCRETE WITHIN 24 HOURS OF CONCRETE PLACEMENT.

ITEM 625.9 – CONCRETE LIGHT POLE BASES, SPECIAL TYPE

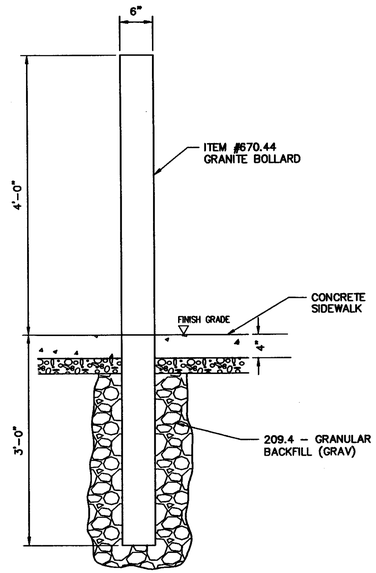

ITEM 670.44 – GRANITE BOLLARD

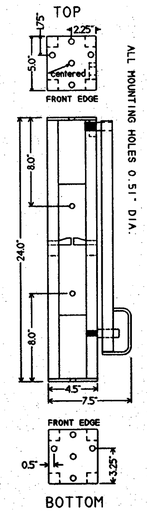

ITEM 670.5 – BICYCLE STAND

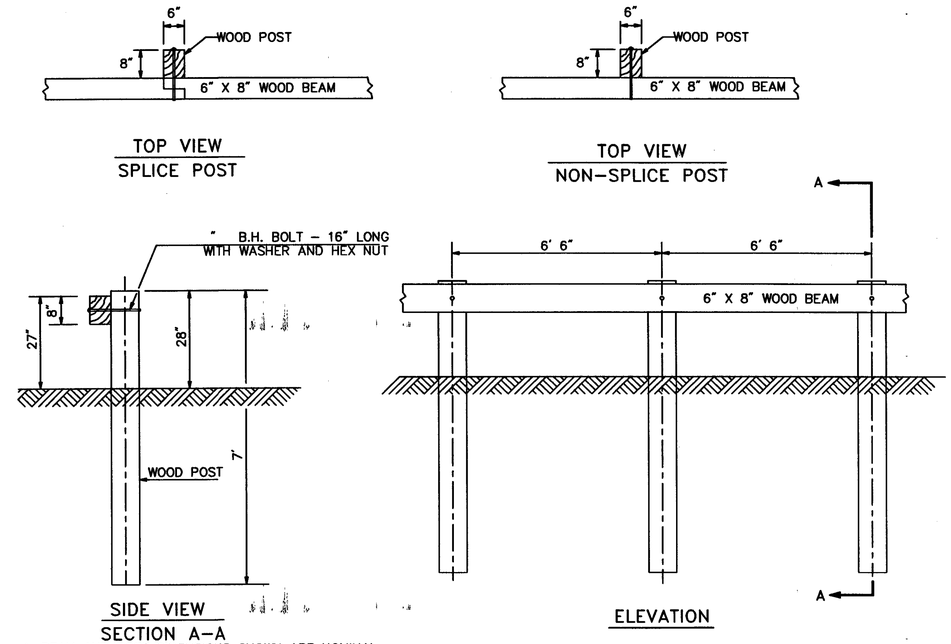

1. BEAM AND POST DIMENSIONS SHOWN ARE NOMINAL.
2. ALL WOOD MEMBERS SPECIFIED ARE TO BE PRESSURE TREATED.

ITEM 606.5166 – WOOD GUARDRAIL DETAIL

STA 2+66.63 RT. – 3+30.93 RT.,
STA 3+43.12 RT. – 4+63.31 RT.
NOT TO SCALE

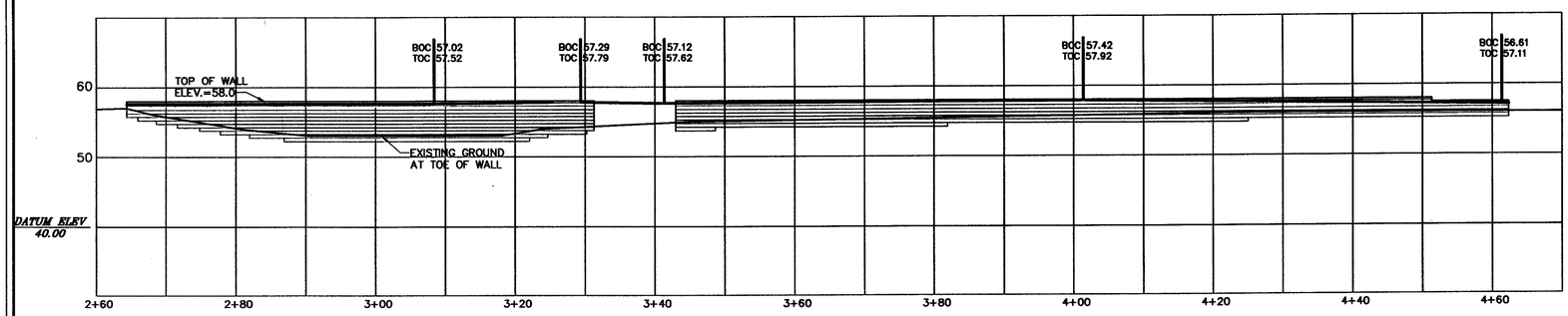

ITEM 592.5 – RETAINING WALL PROFILE

1"=10'

NOTE:
1. DETAIL PROVIDED FOR GENERAL INFORMATION ONLY. STAMPED FINAL DESIGN OF MODULAR WALL SYSTEM TO BE PROVIDED BY CONTRACTOR – SEE SPECIFICATIONS.
2. COORDINATE GEOSYNTHETIC REINFORCEMENT W/WOOD GUARDRAIL POST LOCATIONS

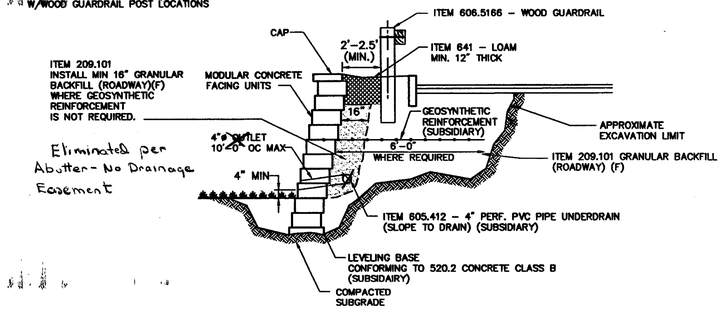

ITEM 592.5 – MODULAR BLOCK RETAINING WALL

NOT TO SCALE

As-Built Plans

VHB Vanasse Hangen Brustlin, Inc.

REVISION DATE	DRAWING NAME	SHEET SCALE	FEDERAL PROJECT NO.	STATE PROJECT NO.	SHEET NO.	TOTAL SHEETS
NOV 10, 2000	51084DET8	AS SHOWN		10025-A	19	43

STATE OF NEW HAMPSHIRE

PASSENGER RAIL STATION – EXETER, N.H.

MISCELLANEOUS DETAILS

ITEM NO.	IDENT NO.	SIGN SIZE HEIGHT	SIGN SIZE WIDTH	TEXT	TEXT DIMENSIONS LETTER HEIGHT UC	LETTER HEIGHT LC	LETTER HEIGHT CAPS	RTE. MKR. NO. OR SHIELD	ARROW	NUMERAL	NO. SIGNS REQ'D	SIGN AREA (SQ. FT.) NOM AREA	SIGN AREA (SQ. FT.) TOTAL AREA	POSTS BREAKAWAY	POSTS STEEL I-BEAM	POSTS 4" ALUMINUM	POSTS 3" ALUMINUM	POSTS U-CHANNEL	REMARKS
615.03	R1-1	30"	30"				10C				1	6.25	6.25			1			WHITE/RED
615.03	R7-8	24"	18"				3B	6"	1.5 X 7.75		6	3	18					6	LEGEND & BORDERS - GREEN WHITE SYMBOL ON BLUE BACKGROUND BACKGROUND - WHITE
615.06	R7-8a	9"	18"				2D 1.5D				1	1.125	1.125						GREEN/WHITE ATTACH TO R7-8

ITEM NO.	IDENT NO.	SIGN SIZE HEIGHT	SIGN SIZE WIDTH	TEXT	TEXT DIMENSIONS LETTER HEIGHT UC	LETTER HEIGHT LC	LETTER HEIGHT CAPS	RTE. MKR. NO. OR SHIELD	ARROW	NUMERAL	NO. SIGNS REQ'D	SIGN AREA (SQ. FT.) NOM AREA	SIGN AREA (SQ. FT.) TOTAL AREA	POSTS BREAKAWAY	POSTS STEEL I-BEAM	POSTS 4" ALUMINUM	POSTS 3" ALUMINUM	POSTS U-CHANNEL	REMARKS

GENERAL NOTES

1. ALL GO & GA SERIES SIGNS SHALL HAVE FLAT SHEET DEMOUNTABLE TEXT AND BORDER COVERED WITH TYPE III SILVER SHEETING. BACKGROUND SHALL BE TYPE III GREEN, UNLESS OTHERWISE SPECIFIED. ALL OTHER GUIDE SIGNS SHALL HAVE TYPE III SILVER TEXT AND BORDER WITH TYPE I BACKGROUND SHEETING, UNLESS OTHERWISE SPECIFIED. THERE SHALL BE NO GAPS IN THE BORDER ON THE MAIN SIGN OF GO & GA SERIES SIGNS WITH THE EXIT PANELS.
2. ALL REGULATORY AND WARNING SIGNS SHALL HAVE TYPE I BACKGROUND SHEETING, UNLESS OTHERWISE SPECIFIED.
3. ALL SHEETING SHALL CONFORM TO AASHTO M268 (ASTM D 4956).
4. SHEETING SPECIFICALLY INTENDED FOR USE ON CONSTRUCTION SIGNS SHALL NOT BE PERMITTED.
5. ALL GO & GA SERIES PLANK SIGNS SHALL CONTAIN THE SIZE AND DATE OF MANUFACTURE, LOCATED IN THE LOWER LEFT CORNER OF THE FRONT FACE. THESE LETTERS AND NUMBERS SHALL BE 2" NON-REFLECTIVE WHITE (I.E., 3-90 10' x 15').
6. REFER TO THE *STANDARD HIGHWAY SIGNS MANUAL* AS PUBLISHED BY THE USDOT-FHWA FOR EXACT DETAILS OF BORDERS, ETC.

REGULATORY SIGN TEXT LAYOUT

VHB *Vanasse Hangen Brustlin, Inc.*

DIRECTORY	FILENAME	FEDERAL PROJECT NO.	STATE PROJECT NO.	SHEET NO.	TOTAL SHEETS
\\NH_BED\51084\SSHEETS\	SIGNS.XLS		10025-A	20	

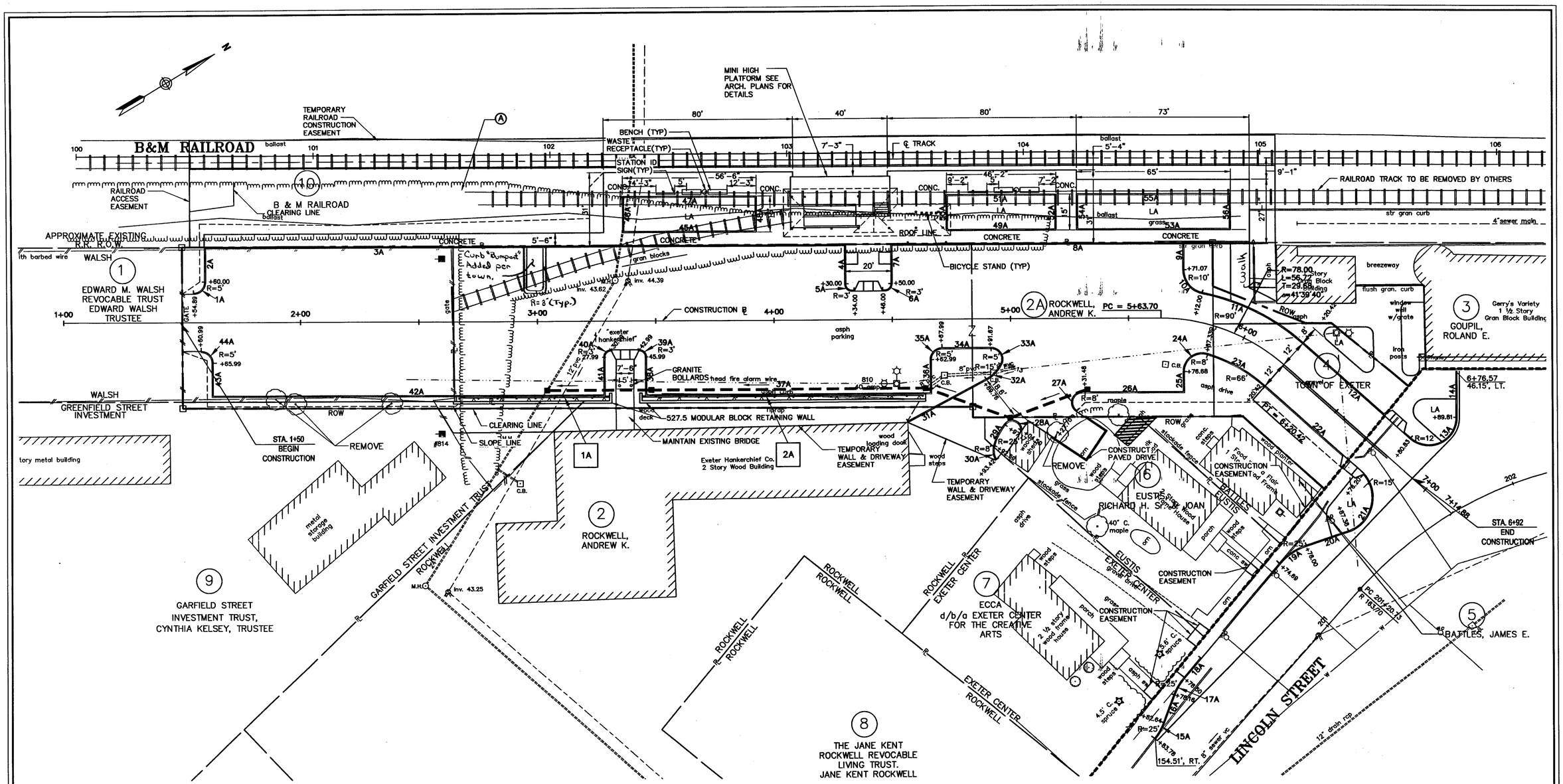

CONSTRUCTION NOTES LEGEND	
Ⓐ	CLEARING & GRUBBING AREA (REFER TO SUMMARY SHEET)
1A	CURB NOTE (REFER TO SUMMARY SHEET)
⟨1⟩	DRAINAGE NOTE
1A	GUARDRAIL NOTE (REFER TO SUMMARY SHEET)
◇	LIGHTING NOTE

As-Built Plans

VHB Vanasse Hangen Brustlin, Inc.

REVISION DATE	DRAWING NAME	SHEET SCALE
NOV 10, 2000	51084site	AS SHOWN

STATE OF NEW HAMPSHIRE

PASSENGER RAIL STATION – EXETER, N.H.

SITE LAYOUT & CURBING LAYOUT PLAN

FEDERAL PROJECT NO.	STATE PROJECT NO.	SHEET NO.	TOTAL SHEETS
	10025–A	21	43

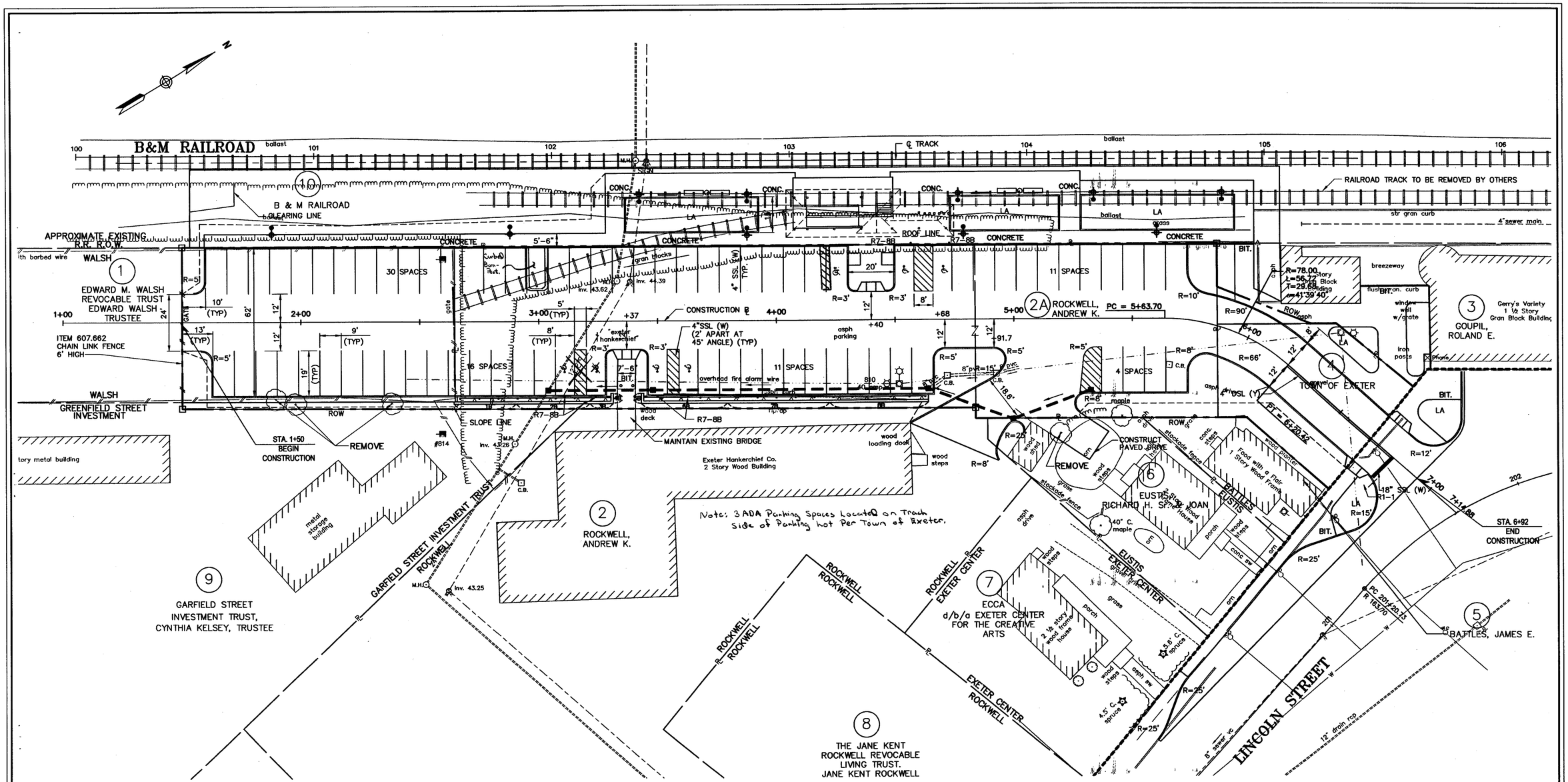

As Built Plans

VHB Vanasse Hangen Brustlin, Inc.

REVISION DATE	DRAWING NAME	SHEET SCALE
NOV 10, 2000	51084PAVE	AS SHOWN

STATE OF NEW HAMPSHIRE

PASSENGER RAIL STATION – EXETER, N.H.

PAVEMENT MARKING & SIGNING LAYOUT PLAN

FEDERAL PROJECT NO.	STATE PROJECT NO.	SHEET NO.	TOTAL SHEETS
	10025-A	22	43

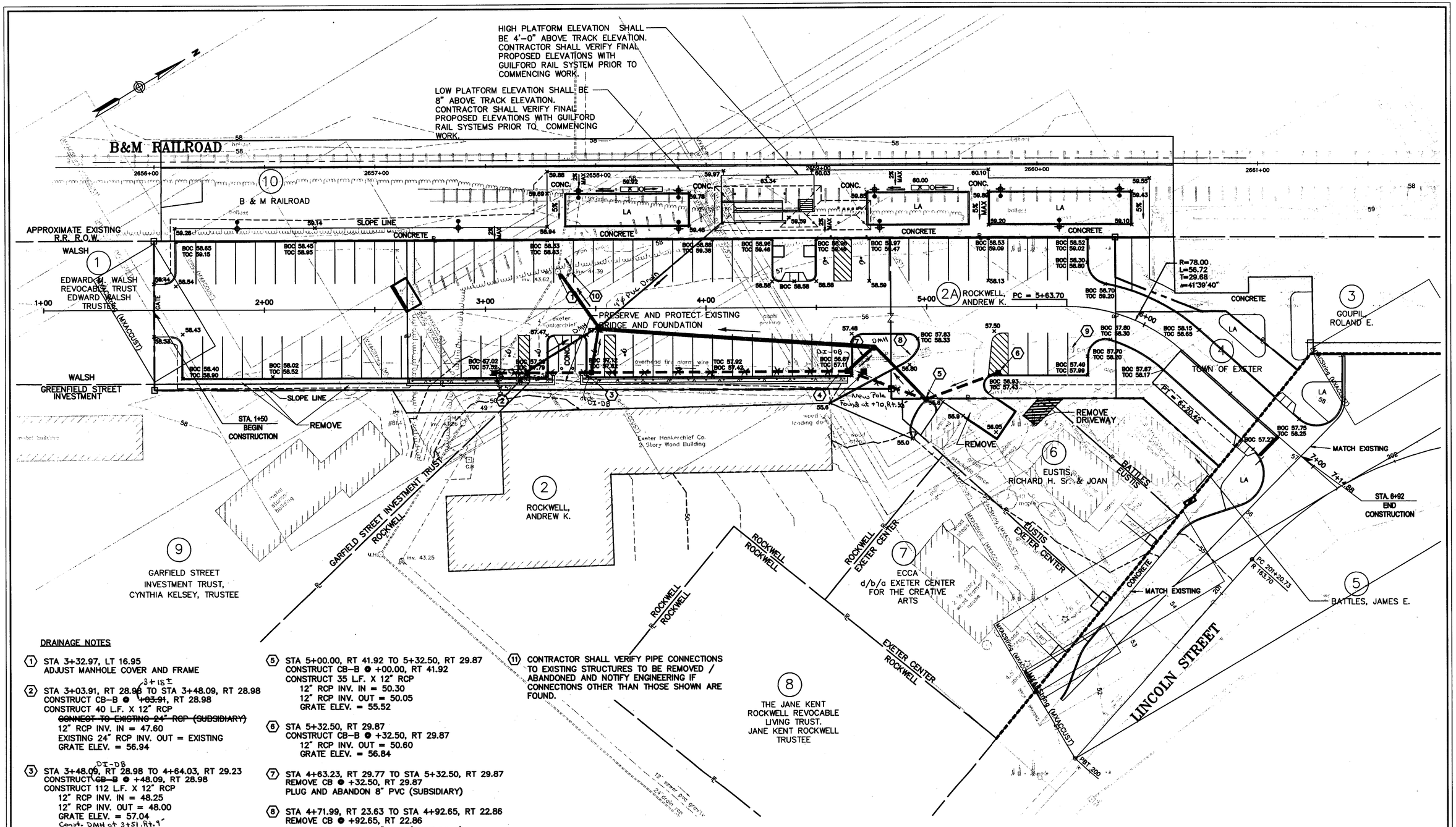

DRAINAGE NOTES

1. STA 3+32.97, LT 16.95
   ADJUST MANHOLE COVER AND FRAME

2. STA 3+03.91, RT 28.98 TO STA 3+48.09, RT 28.98
   CONSTRUCT CB-B ● ~~+03.91~~ 3+18± , RT 28.98
   CONSTRUCT 40 L.F. X 12" RCP
   ~~CONNECT TO EXISTING 24" RCP (SUBSIDIARY)~~
   12" RCP INV. IN = 47.60
   EXISTING 24" RCP INV. OUT = EXISTING
   GRATE ELEV. = 56.94

3. STA 3+48.09, RT 28.98 TO 4+64.03, RT 29.23
   CONSTRUCT ~~CB-B~~ DI-DB ● +48.09, RT 28.98
   CONSTRUCT 112 L.F. X 12" RCP
   12" RCP INV. IN = 48.25
   12" RCP INV. OUT = 48.00
   GRATE ELEV. = 57.04
   Const. DMH at 3+51, Rt. 9'
   Const. 18 LF x 12" Plastic Pipe

4. STA 4+64.03, RT 29.23 TO STA 5+00.00, RT 41.92
   CONSTRUCT ~~CB-B~~ DI-DB ● +64.03, RT 29.23
   CONSTRUCT 34 L.F. X 12" RCP
   12" RCP INV. IN = 49.65
   12" RCP INV. OUT = 49.40
   GRATE ELEV. = 56.53
   Const. DMH at 4+76, Rt. 17'
   Const. 10 LF x 12" Plastic Pipe

5. STA 5+00.00, RT 41.92 TO 5+32.50, RT 29.87
   CONSTRUCT CB-B ● +00.00, RT 41.92
   CONSTRUCT 35 L.F. X 12" RCP
   12" RCP INV. IN = 50.30
   12" RCP INV. OUT = 50.05
   GRATE ELEV. = 55.52

6. STA 5+32.50, RT 29.87
   CONSTRUCT CB-B ● +32.50, RT 29.87
   12" RCP INV. OUT = 50.60
   GRATE ELEV. = 56.84

7. STA 4+63.23, RT 29.77 TO STA 5+32.50, RT 29.87
   REMOVE CB ● +32.50, RT 29.87
   PLUG AND ABANDON 8" PVC (SUBSIDIARY)

8. STA 4+71.99, RT 23.63 TO STA 4+92.65, RT 22.86
   REMOVE CB ● +92.65, RT 22.86
   PLUG AND ABANDON 8" PVC (SUBSIDIARY)

9. STA 5+66.10, RT 19.51
   REMOVE CB ● +66.10, RT 19.51

10. STA 3+38.38, RT 16.70
    ADJUST MANHOLE COVER AND FRAME

11. CONTRACTOR SHALL VERIFY PIPE CONNECTIONS TO EXISTING STRUCTURES TO BE REMOVED / ABANDONED AND NOTIFY ENGINEERING IF CONNECTIONS OTHER THAN THOSE SHOWN ARE FOUND.

As-Built Plans

VHB Vanasse Hangen Brustlin, Inc.

REVISION DATE	DRAWING NAME	SHEET SCALE	FEDERAL PROJECT NO.	STATE PROJECT NO.	SHEET NO.	TOTAL SHEETS
NOV 10, 2000	51084drgr	AS SHOWN		10025-A	23	43

STATE OF NEW HAMPSHIRE

PASSENGER RAIL STATION – EXETER, N.H.

DRAINAGE & GRADING PLAN

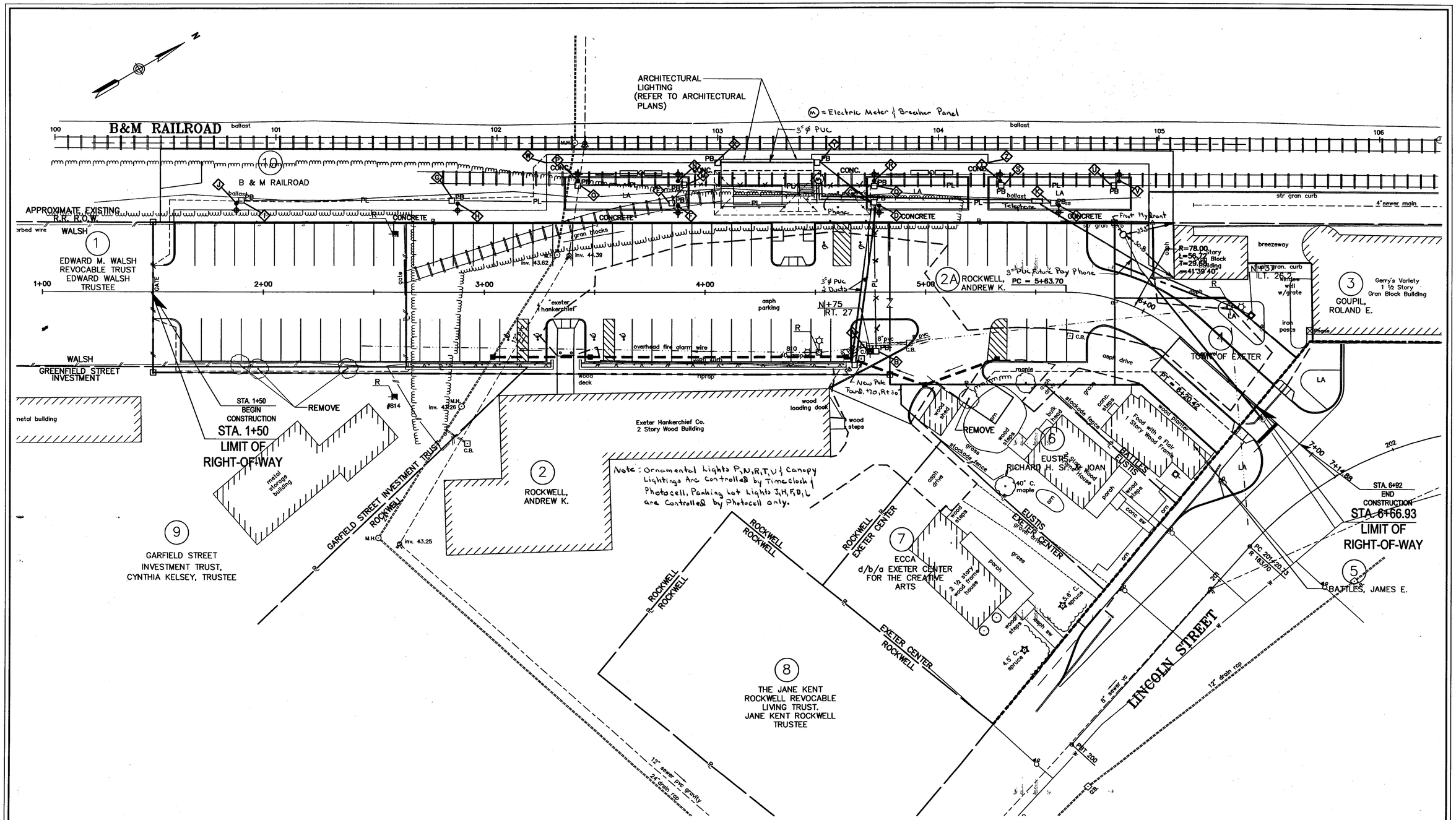

NOTE:

CONTRACTOR SHALL VERIFY ALL UTILITY LOCATIONS. ANY UTILITY CONFLICTS, CONTRACTOR SHALL NOTIFY UTILITY ENGINEER PRIOR TO CONSTRUCTION.

As-Built Plans

VHB Vanasse Hangen Brustlin, Inc.

REVISION DATE	DRAWING NAME	SHEET SCALE
NOV 10, 2000	51084util	AS SHOWN

STATE OF NEW HAMPSHIRE

PASSENGER RAIL STATION – EXETER, N.H.

UTILITY PLAN

FEDERAL PROJECT NO.	STATE PROJECT NO.	SHEET NO.	TOTAL SHEETS
	10025-A	24	43

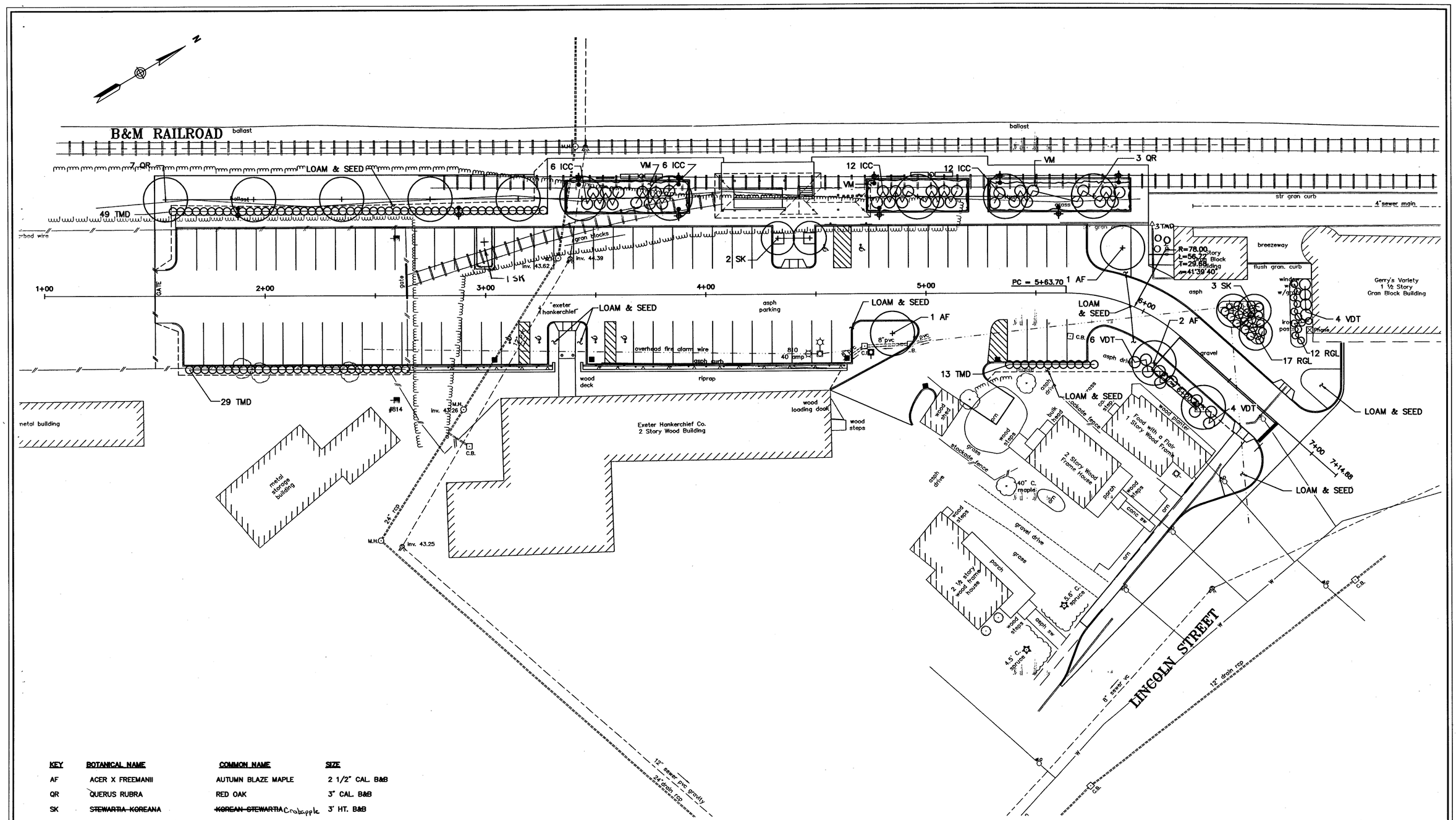

KEY	BOTANICAL NAME	COMMON NAME	SIZE
AF	ACER X FREEMANII	AUTUMN BLAZE MAPLE	2 1/2" CAL. B&B
QR	QUERUS RUBRA	RED OAK	3" CAL. B&B
SK	~~STEWARTIA KOREANA~~	~~KOREAN STEWARTIA~~ Crabapple	3' HT. B&B
ICC	ILEX CRENATA 'CONVEXA'	JAPANESE HOLLY	4' HT. B&B
TMD	TAXUS MEDIA 'DENSIFORMIS'	JAPANESE YEW	3' HT. B&B
RGL	RHUS AROMATICA 'GRO-LOW'	GROW LOW SUMAC	2' HT. POT. CONT.
VDT	VIBURNUM DENTATUM	ARROWWOOD	4' HT. B&B
VM	VINCA MINOR	COMMON PERIWINKLE	3' POT. CONT.

NOTE:
ALL AREAS OUTSIDE PAVEMENT SHALL RECEIVE 645.154 – BARK MULCH 4" DEEP UNLESS NOTED OTHERWISE.

As-Built Plans

VHB Vanasse Hangen Brustlin, Inc.

REVISION DATE	DRAWING NAME	SHEET SCALE
NOV 10, 2000	51084LAND	AS SHOWN

STATE OF NEW HAMPSHIRE

PASSENGER RAIL STATION – EXETER, N.H.

LANDSCAPING PLAN

FEDERAL PROJECT NO.	STATE PROJECT NO.	SHEET NO.	TOTAL SHEETS
	10025-A	25	43

Exeter Passenger Rail Station

Exeter, New Hampshire

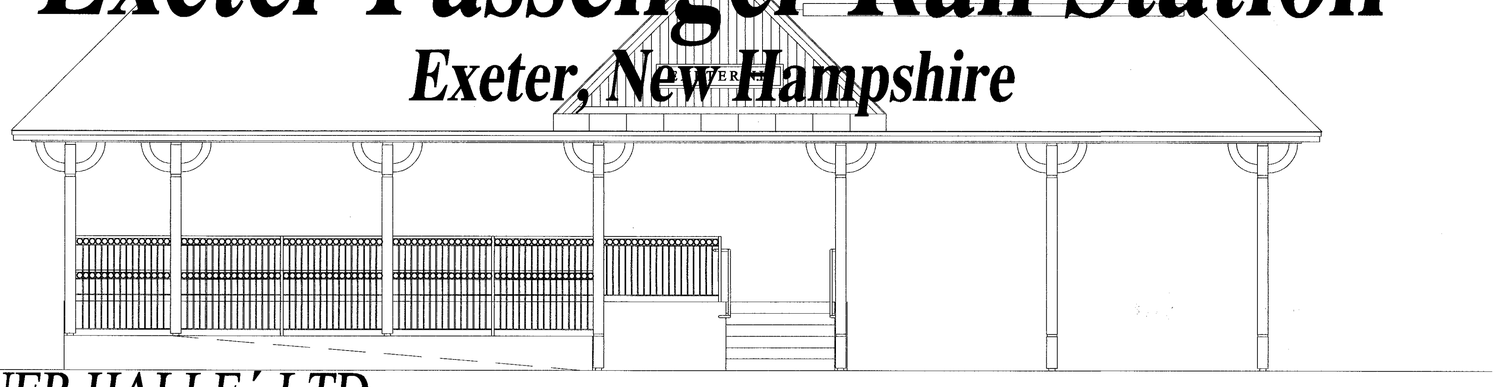

SHERMAN GREINER HALLE' LTD

ARCHITECTS, LANDSCAPE ARCHITECTS, PLANNERS
2 CAPITAL PLAZA, CONCORD, NH 03301
(603) 225-0640 (FAX) 225-0621

ARCHITECTURAL

Sherman Greiner Halle´Ltd
2 Capital Plaza
Concord, NH 03301
Ph. (603) 225-0640
Fax (603) 225-0621

DRAWING NAME	DRAWING NUMBER
GENERAL NOTES	A0-1
ABBREVIATIONS, CONVERSIONS, SYMBOLS,	A0-3
CODE REVIEWS, MOUNTING HEIGHTS	A0-4
FLOOR PLAN	A1-1
REFLECTED CEILING PLAN	A1-2
ROOF PLAN	A1-3
ELEVATIONS	A3-1
BUILDING SECTIONS	A4-1
BUILDING SECTIONS, DETAILS	A4-2

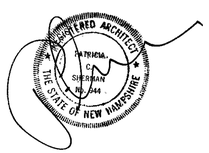

STRUCTURAL

Benjamin E. Tirey, P.E.
P.O. Box 174
Temple, NH 03084
Ph. (603) 878-2743
Fax (603) 878-2743

DRAWING NAME	DRAWING NUMBER
GENERAL NOTES & ABBREVIATIONS	S-1
FOUNDATION & ROOF FRAMING PLAN	S-2
STRUCTURAL SECTIONS	S-3
STRUCTURAL SECTIONS & DETAILS	S-4
ROOF TRUSS LOADING DIAGRAMS	S-5

ELECTRICAL

WV Engineering Associates, PA
P.O. Box 769
Keene, NH 03431
Ph. (603) 352-7007
Fax (603) 352-7005

DRAWING NAME	DRAWING NUMBER
MINI-HIGH PLATFORM ELECTRICAL/LIGHTING	E-1

DRAWING NAME	DRAWING NUMBER

DRAWING NAME	DRAWING NUMBER

GENERAL PLAN NOTES:

APPROVALS

PROJECT NO: 2275.100
DATE: 10/16/2000

SGH-ARCHITECT OF RECORD

APPROVED DATE

APPROVED DATE

CITY OF EXETER

APPROVED DATE

FIRE DEPARTMENT

APPROVED DATE

STATE FIRE MARSHALL

2228CVR.dwg 5-14-99 1:45:49 pm EST

ARCHITECTURAL GENERAL NOTES

GENERAL NOTES
THE ARCHITECTURAL GENERAL NOTES ARE PROVIDED TO SUPPLEMENT, WHEN PROVIDED, A WRITTEN PROJECT MANUAL (SPECIFICATIONS). THE MORE STRINGENT REQUIREMENT SHALL ALWAYS PREVAIL.

01001 – SUMMARY OF WORK
BRIEFLY AND WITHOUT FORCE AND EFFECT UPON THE CONTRACT DOCUMENTS, THE ARCHITECTURAL WORK OF THE CONTRACT CAN BE SUMMARIZED AS:

THE CONSTRUCTION OF A PASSENGER RAIL HANDICAP ACCESSIBLE OPEN PLATFORM OF WOOD, STEEL AND CONCRETE CONSTRUCTION.

THE WORK INCLUDES BUT NOT LIMITED TO:

ARCHITECTURAL, STRUCTURAL. GENERAL CONSTRUCTION INCLUDING EXCAVATION,
CONCRETE FOUNDATIONS, STEEL AND WOOD FRAMING AND WOOD TRUSSES, ASPHALT ROOFS
ELECTRICAL AND LIGHTING SYSTEMS.

01002 – SCHEDULE OF ALTERNATES
A. ALTERNATE #1 – METAL ROOF. SEE BID FORM (IF APPLICABLE).

01003 – WORK UNDER OTHER CONTRACTS
A. SEE BID FORM (IF APPLICABLE).

01004 – SCHEDULE
A. SEE BID FORM FOR START AND COMPLETION DATES (IF APPLICABLE).

B. NO EXTRA PAYMENT SHALL BE MADE TO THE CONTRACTOR FOR DELAY BEYOND THE CONTROL OF THE OWNER (I.E. WEATHER, WAR, STRIKE, ETC.) HOWEVER ADDITIONAL CONTRACT TIME MAY BE GRANTED UPON APPROVAL BY THE OWNER.
C. IT IS THE RESPONSIBILITY OF THE CONTRACTOR TO ESTABLISH A PROGRESS WORK SCHEDULE BEFORE WORK COMMENCES AND KEEP THAT SCHEDULE UPDATED.

01005 – CONTRACT DOCUMENTS
A. THE GENERAL PROVISIONS OF THE CONTRACT – AIA 101.
B. THE GENERAL CONDITIONS OF THE CONTRACT – AIA 201.
C. THE SUPPLEMENTARY CONDITIONS OF THE CONTRACT.
D. THE DRAWINGS AND SPECIFICATIONS.

THESE PLANS WERE DESIGNED AND TO THE BEST OF OUR KNOWLEDGE CONFORM WITH THE LATEST EDITION OF THE BOCA CODE (1996) AND NFPA 101 LIFE SAFETY CODE (1997) AT THE TIME THE PLANS WERE DRAWN. SUBSEQUENTLY, SHOULD THE CONSTRUCTION OF THE BUILDING BE DELAYED BEYOND IMMEDIATE PERMITTING, THESE PLANS SHOULD BE REVIEWED FOR CONFORMITY TO ANY CHANGES IN LOCAL AND NATIONAL CODE REQUIREMENTS. IN THE EVENT OF A CONFLICT BETWEEN APPLICABLE CODES AND REGULATIONS AND REFERENCED STANDARDS OF THESE PLANS AND SPECIFICATIONS, THE MORE STRINGENT PROVISION SHALL GOVERN. NO VARIATION REQUIRED BY A BUILDING OFFICIAL SHALL BE BINDING ON THE DESIGNER. ALL WORK SHALL COMPLY WITH FEDERAL, STATE AND LOCAL BUILDING, FIRE, ELECTRICAL, MECHANICAL, AND PLUMBING CODES AND ALL OTHER APPLICABLE CODES, REGULATIONS, AND ORDINANCES INCLUDING THE REQUIREMENTS OF THE AMERICANS WITH DISABILITIES ACT. THE EXTENT OF THE WORK IS DESCRIBED IN THE CONTRACT DOCUMENTS WHICH INCLUDE THE DRAWINGS, SPECIFICATIONS, AND THE GENERAL PROVISIONS OF THE CONTRACT INCLUDING THE GENERAL AND SUPPLEMENTAL CONDITIONS AND OTHER DIVISION ONE SPECIFICATION SECTIONS. THE DRAWINGS ARE LISTED ON THE COVER SHEET OF THE DRAWING PACKAGE.

ALL DIMENSIONS ARE TO BE FIELD VERIFIED. THE GENERAL CONTRACTOR SHALL NOTIFY THE OWNER, AND ARCHITECT OF ANY DISCREPANCY IN DIMENSIONS AND/OR OTHER CONDITIONS PRIOR TO BEGINNING OR CONTINUING WITH ANY WORK. THE GENERAL CONTRACTOR SHALL BE RESPONSIBLE FOR ANY VARIATION OR DEVIATIONS FROM THE CONTRACT DOCUMENTS WITHOUT APPROVAL AND WRITTEN CONFIRMATION FROM THE ARCHITECT. WRITTEN DIMENSIONS SHALL TAKE PRECEDENT OVER SCALED DIMENSIONS. DRAWINGS SHALL NOT BE SCALED.

01006 – AGREEMENT FORMS
A. SEE BID FORM (IF APPLICABLE).

01007 – PERFORMANCE AND PAYMENT BONDS
A. SEE BID FORM (IF APPLICABLE).

01008 – INSURANCE
A. SEE BID FORM (IF APPLICABLE).

01009 – PAYMENT / REQUISITIONS
A. SEE BID FORM (IF APPLICABLE).

01010 – CHANGE ORDERS AND EXTRA WORK

A. OVERHEAD AND PROFIT MARKUPS WILL BE AT A SPECIFIC RATE AS SPECIFIED ON THE BID FORM.

01011 – PROJECT SIGNAGE.
A. THE CONTRACTOR WILL ERECT A SIGN ON THE PROJECT SITE DESCRIBING THE PROJECT AS SHOWN ON THE **DRAWINGS.**

01012 – SUBMITTALS
A. SUBMITTAL COORDINATION, PREPARATION AND PROCESSING SHALL INCLUDE BUT ARE NOT LIMITED TO THE **FOLLOWING:**
1. CERTIFICATES OF INSURANCE. (AT START)
2. SCHEDULE OF VALUES. (AT START)
3. CONSTRUCTION SCHEDULE. (WEEKLY)
4. SHOP DRAWINGS AS REQUIRED AND REQUESTED IN THE SPECIFICATIONS, PRODUCTS AND INSTALLATION TECHNIQUES NEED TO BE APPROVED BY THE ARCHITECT, AND OWNER AND OR TOWN.
5. PRODUCT DATA AS REQUIRED AND REQUESTED IN THE SPECIFICATIONS.
6. SAMPLES AS REQUIRED AND REQUESTED IN THE SPECIFICATIONS.
7. OPERATIONS AND MAINTENANCE MANUALS AS REQUESTED IN THE SPECIFICATIONS. (AT SUBSTANTIAL COMPLETION)
8. WARRANTIES AS REQUESTED IN THE SPECIFICATIONS. (AT SUBSTANTIAL COMPLETION)
9. RECORD DRAWINGS AS REQUESTED IN THE SPECIFICATIONS. (AT COMPLETION)
10. RELEASE OF LIENS. (AT EACH PAY REQUISITION)
11. SAFETY PLAN. (AT START)

B. UNLESS OTHERWISE SPECIFIED, TRANSMIT 5 COPIES OF THE SUBMITTAL TO THE ARCHITECT WELL IN ADVANCE OF PERFORMANCE OF RELATED CONSTRUCTION ACTIVITIES TO AVOID DELAY. ALLOW NO LESS THAN FOURTEEN CALENDAR DAYS FOR REVIEW. NO EXTENSION OF CONTRACT TIME WILL BE AUTHORIZED BECAUSE OF FAILURE TO TRANSMIT SUBMITTALS TO THE ARCHITECT SUFFICIENTLY IN ADVANCE OF THE WORK TO PERMIT PROCESSING.
C. PREPARE A FULLY DEVELOPED, CONTRACTOR'S CONSTRUCTION SCHEDULE "CPM". SUBMIT WITHIN THREE DAYS OF THE DATE ESTABLISHED FOR "COMMENCEMENT OF THE WORK". THIS SCHEDULE SHALL BE UPDATED BI-WEEKLY.

01013 – PRELIMINARY SITE VISIT/ PROJECT MEETINGS
A. THE CONTRACTORS MUST VISIT THE LOCATION OF THE WORK AND INFORM THEMSELVES OF THE CONDITIONS AND MAKE THEIR OWN ESTIMATES OF THE FACILITIES AND DIFFICULTIES ATTENDING THE EXECUTION OF THE WORK. ANY PROBLEM, DISCREPANCY, OR QUESTION SHOULD BE BROUGHT TO THE ATTENTION OF THE ARCHITECT / OWNER BEFORE COMMENCING OR CONTINUING WITH ANY WORK. THE FAILURE BY THE CONTRACTOR TO DISCOVER ANY ERROR, INCONSISTENCY, OR OMISSION IN THE CONTRACT DOCUMENTS SHALL NOT RELIEVE HIM OF THE OBLIGATION TO PROPERLY EXECUTE AND COMPLETE THE WORK.
B. THE ARCHITECT SHALL SCHEDULE A RECONSTRUCTION CONFERENCE AND ORGANIZATIONAL MEETINGS AT THE PROJECT SITE OR OTHER CONVENIENT LOCATION NO LATER THAN THREE DAYS AFTER EXECUTION OF THE CONTRACT AND PRIOR TO COMMENCEMENT OF WORK. THE MEETING WILL BE CONDUCTED TO REVIEW RESPONSIBILITIES AND PERSONNEL ASSIGNMENTS. MEETING SHALL INCLUDE THE CONTRACTOR, ALL SUBCONTRACTORS, ARCHITECT AND REPRESENTATIVES FROM THE OWNER.
C. CONDUCT WEEKLY OR BIWEEKLY MEETINGS AT THE PROJECT SITE AT REGULARLY SCHEDULED INTERVALS. NOTIFY THE OWNER AND ARCHITECT OF SCHEDULED MEETING DATES. COORDINATE DATES OR MEETINGS WITH PREPARATION OF PAYMENT REQUEST.

01014 – ALLOWANCES
A. SEE BID FORM.

01015 – ACCESS
A. DRIVEWAYS AND ENTRANCES SERVING THE PREMISES SHALL BE KEPT CLEAR AND AVAILABLE TO THE OWNER AND THE OWNER'S EMPLOYEES AT ALL TIMES. THESE AREAS SHALL NOT BE FOR THE CONTRACTOR'S PARKING OR STORAGE OF MATERIALS. SCHEDULE DELIVERIES TO MINIMIZE SPACE AND TIME REQUIREMENTS FOR STORAGE OF MATERIALS AND EQUIPMENT ON SITE.
B. PARTIAL OWNER OCCUPANCY: THE OWNER RESERVES THE RIGHT TO OCCUPY, TO PLACE AND / OR INSTALL EQUIPMENT IN COMPLETED AREAS OF THE BUILDING PRIOR TO SUBSTANTIAL COMPLETION, PROVIDED THAT SUCH OCCUPANCY DOES NOT INTERFERE WITH THE COMPLETION OF THE WORK.

01016 – CONTRACT LIMIT LINES
A. THE CONTRACT LIMIT LINES ARE DEFINED ON THE CONTRACT DRAWINGS AND WILL BE CONFIRMED AT THE PRECONSTRUCTION CONFERENCE. AT THAT CONFERENCE ALL PARTIES INVOLVED WILL REVIEW THE CONTRACTOR'S REQUIREMENTS FOR STAGING AND STORAGE. STORAGE OF MATERIALS ON SITE IS REQUIRED FOR PAYMENT PROCESSING.
B. DURING THE CONSTRUCTION, CONTRACTOR'S OPERATIONS MUST REMAIN WITHIN THE CONTRACT LIMIT LINES. PORTIONS OF THE SITE BEYOND AREAS IN WHICH CONSTRUCTION OPERATIONS ARE INDICATED ARE NOT TO BE DISTURBED.
C. ANY AREA BEYOND THE CONTRACT LIMIT LINE THAT IS DAMAGED WILL BE REPAIRED AT THE CONTRACTOR'S EXPENSE. THE SCOPE OF THE REPAIRS WILL BE APPROVED BY THE OWNER BEFORE SUCH REPAIR WORK IS STARTED.
D. THE CONTRACTOR'S USE OF THE SPECIFIC SITE IS LIMITED ONLY BY THE OWNER'S RIGHT TO PERFORM CONSTRUCTION OPERATIONS WITH ITS OWN FORCES OR TO EMPLOY SEPARATE CONTRACTORS ON PORTIONS OF THE PROJECT OR TENANT FIT-UP.

01017 – SYSTEM MAINTENANCE
A. MAINTAIN ALL SYSTEMS SUCH AS BUT NOT LIMITED TO, WATER, SEPTIC, TELEPHONE, POWER ETC. THAT SUPPLY THIS AND OTHER BUILDINGS ON THIS SITE OR ADJACENT SITES DURING ALL PHASES OF THE WORK.
B. IF A SHORT PERIOD OF INTERRUPTION IS REQUIRED FOR ANY SYSTEM DURING NON-PEAK WORK HOURS, THE OWNER SHOULD BE OFFERED THE ALTERNATIVE OF ACCEPTING THE INTERRUPTION RATHER THAN INSTALLING A LOOP SERVICE.

01018 – TEMPORARY FACILITIES
A. CONTRACTORS MAY CONNECT TO OWNER'S POWER AND WATER SERVICE FOR TEMPORARY SERVICE. CONNECTIONS TO BE DONE BY LICENSED ELECTRICIAN AND / OR PLUMBERS. LIABILITY AND EXPENSE FOR SAID CONNECTIONS REMAIN THAT OF THE CONTRACTOR.
B. CONTRACTOR TO PROVIDE HIS OWN TELEPHONE SERVICE AND SANITARY SERVICES, WASTE DISPOSAL AND VERMIN CONTROL.
C. UNLESS OTHERWISE SPECIFIED, CONTRACTOR SHALL PROVIDE TEMPORARY LIGHTING AS REQUIRED TO ENSURE SECURITY AND SAFETY REQUIREMENTS FOR THE DURATION OF THE CONSTRUCTION PERIOD AND UNTIL THE PROJECT IS SIGNED OVER TO THE TENANT OR HIS AGENT AT THE COMPLETION OF THE PROJECT.
D. UNLESS OTHERWISE SPECIFIED, EROSION, SEDIMENTATION CONTROL, AND PREVENTION SHALL BE THE CONTRACTOR'S RESPONSIBILITY AND WILL BE OF CRITICAL IMPORTANCE TO THE BUILDING OWNER. ALL FEDERAL, STATE AND LOCAL CODES AND REQUIREMENTS SHALL BE ADHERED TO WITH RESPECT TO EROSION AND SEDIMENTATION CONTROL AND PREVENTION.

01019 – PERMITS AND UTILITY CONNECTIONS.
A. UNLESS OTHERWISE SPECIFIED, THE GENERAL CONTRACTOR SHALL OBTAIN AND PAY FOR ALL CONSTRUCTION PROCESS PERMITS, TEMPORARY AND FINAL UTILITY CHARGES, DEMOLITION AND DUMP CHARGES, OCCUPANCY APPROVALS AND ALL OTHER USUAL FEES ASSOCIATED WITH THIS SCOPE OF THE WORK.

01020 – PROJECT COORDINATION AND ADMINISTRATIVE PROCEDURES
THE GENERAL CONTRACTOR SHALL BE RESPONSIBLE FOR CONSTRUCTION METHODS, PROCEDURES, AND CONDITIONS EXCEPT AS SPECIFICALLY INDICATED OTHERWISE IN THE CONTRACT DOCUMENTS.
A. THE CONTRACTOR SHALL COORDINATE ALL ACTIVITIES INCLUDED UNDER VARIOUS SECTIONS OF THESE SPECIFICATIONS TO ASSURE EFFICIENT AND ORDERLY INSTALLATION OF EACH PART OF THE WORK. CONTRACTOR SHALL COORDINATE CONSTRUCTION OPERATIONS INCLUDED UNDER DIFFERENT SECTIONS OF THE SPECIFICATIONS THAT ARE DEPENDENT ON EACH OTHER FOR PROPER INSTALLATION, CONNECTION AND OPERATION.
B. THE CONTRACTOR SHALL MAKE ADEQUATE PROVISION TO ACCOMMODATE ITEMS SCHEDULED FOR LATER INSTALLATION.
C. WHERE AVAILABILITY OF SPACE OR HEADROOM IS LIMITED, CONTRACTOR SHALL COORDINATE INSTALLATION OF DIFFERENT COMPONENTS TO ASSURE MAXIMUM ACCESSIBILITY FOR REQUIRED MAINTENANCE, SERVICE AND REPAIR.
D. THE CONTRACTOR SHALL PREPARE, WHEN NECESSARY, MEMOS TO ADVISE ALL PARTIES WHEN SPECIAL COORDINATION OR INSTALLATIONS ARE REQUIRED. DISTRIBUTE THESE MEMOS TO OWNER, ARCHITECT, AND ALL CONSULTANTS.
E. COORDINATE SCHEDULING AND TIMING OF ADMINISTRATIVE PROCEDURES WITH OTHER CONSTRUCTION ACTIVITIES TO AVOID CONFLICTS AND ENSURE THE ORDERLY PROGRESS OF THE WORK. SUCH ACTIVITIES INCLUDE BUT ARE NOT LIMITED TO THE FOLLOWING:
1. PREPARATION OF SCHEDULES.
2. INSTALLATIONS AND REMOVAL OF TEMP FACILITIES.
3. DELIVERY AND PROCESSING OF SUBMITTALS.
4. PROGRESS MEETINGS.
5. PROJECT CLOSE OUT ACTIVITIES.

F. PREPARE AND SUBMIT COORDINATION DRAWINGS WHERE CLOSE AND CAREFUL COORDINATION IS REQUIRED FOR INSTALLATION OF PRODUCTS AND MATERIALS FABRICATED OFF SITE BY SEPARATE ENTITIES AND WHERE LIMITED SPACE AVAILABILITY NECESSITATED MAXIMUM UTILIZATION OF SPACE FOR EFFICIENT INSTALLATION OF DIFFERENT COMPONENTS.
G. REQUIRE THE INSTALLER OF EACH MAJOR COMPONENT TO INSPECT BOTH THE SUBSTRATE AND CONDITION UNDER WHICH THE WORK IS TO BE PERFORMED. DO NOT PROCEED UNTIL UNSATISFACTORY CONDITIONS HAVE BEEN CORRECTED IN AN ACCEPTABLE MANNER.
H. COMPLY WITH MANUFACTURER'S INSTRUCTIONS AND RECOMMENDATIONS TO THE EXTENT THAT THOSE INSTRUCTIONS AND RECOMMENDATIONS ARE MORE EXPLICIT OR STRINGENT THAN THOSE REQUIREMENTS CONTAINED IN THE CONTRACTED DOCUMENTS.
I. INSPECT MATERIALS OR EQUIPMENT IMMEDIATELY UPON DELIVERY AND AGAIN PRIOR TO INSTALLATION. REJECT ANY DAMAGED OR DEFECTIVE EQUIPMENT OR MATERIALS.
J. PROVIDE ATTACHMENT AND CONNECTION DEVICES AND METHODS NECESSARY FOR SECURING WORK, SECURE WORK TRUE TO LINE AND LEVEL. ALLOW FOR EXPANSION AND BUILDING MOVEMENT AND ALLOW FOR EXPANSION OF BUILDING MATERIALS.
K. PROVIDE UNIFORM JOINT WIDTHS IN EXPOSED WORK. ARRANGE JOINTS IN EXPOSED WORK TO OBTAIN THE BEST VISUAL EFFECT. REFER QUESTIONABLE CHOICE TO THE ARCHITECT FOR FINAL DECISION.
L. RECHECK MEASUREMENTS AND DIMENSIONS BEFORE STARTING EACH INSTALLATION.
M. INSTALL EACH COMPONENT DURING WEATHER CONDITIONS AND PROJECT STATUS THAT WILL ENSURE THE BEST POSSIBLE RESULTS. ISOLATE EACH PART OF THE COMPLETED CONSTRUCTION FROM INCOMPATIBLE MATERIALS AS NECESSARY TO PREVENT DETERIORATION.
N. WHERE MOUNTING HEIGHTS AND CLEARANCES ARE NOT INDICATED, INSTALL INDIVIDUAL COMPONENTS AT STANDARD MOUNTING HEIGHTS RECOGNIZED WITHIN THE INDUSTRY AND BY THE ADA FOR THE PARTICULAR APPLICATION. REFER QUESTIONABLE MOUNTING HEIGHT TO THE ARCHITECT.

01021 – CLEANING AND PROTECTION
A. CLEAN AND PROTECT CONSTRUCTION IN PROGRESS AND ADJOINING MATERIALS IN PLACE.
B. CLEAN AND MAINTAIN COMPLETED CONSTRUCTION AS FREQUENTLY AS NECESSARY THROUGH THE REMAINDER OF THE CONSTRUCTION PROCESS. ADJUST AND LUBRICATE OPERABLE COMPONENTS TO ENSURE OPERABILITY.
C. SUPERVISE CONSTRUCTION ACTIVITY TO LIMIT EXPOSURE OF CONSTRUCTION TO ADVERSE EFFECTS OF, BUT NOT LIMITED TO DYNAMIC LOADING, INTERNAL PRESSURE, THERMAL SHOCK, WATER OR ICE, CHEMICALS, LIGHT, RADIATION, ABRASION, THEFT, VANDALISM, MISALIGNMENT, SOILING, STAINING TRAFFIC, OR EXTREME TEMPERATURES.

01022 – FIELD ENGINEERING

A . VERIFY LAYOUT INFORMATION ON DRAWINGS IN RELATION TO PROPERTY SURVEY AND EXISTING BENCHMARKS BEFORE PROCEEDING WITH THE WORK. THE CONTRACTOR IS SOLELY RESPONSIBLE FOR THE LAYOUT AND PLACEMENT OF ALL STRUCTURES AND BUILDING AND SHALL SUPPLY AT THE REQUEST OF THE ARCHITECT ANY AFFIDAVIT FROM A LICENSED SURVEYOR THAT THE BUILDING HAS BEEN ERECTED PER PLAN AND SPECIFICATIONS.

B. DO NOT CHANGE OR RELOCATE BENCHMARKS. RETAIN ALL EXISTING BENCHMARKS.
C. THE EXISTENCE AND LOCATION OF UNDERGROUND UTILITIES AND CONSTRUCTION INDICATED AS EXISTING ARE NOT GUARANTEED. BEFORE BEGINNING SITEWORK, INVESTIGATE AND VERIFY THE EXISTENCE AND LOCATION OF UNDERGROUND UTILITIES AND OTHER CONSTRUCTION.
D. WORKING FROM LINES AND LEVELS ESTABLISHED BY THE EXISTING CONDITIONS AND CONSTRUCTION ESTABLISHED BENCHMARKS AND MARKERS TO SET LINES AND LEVELS AT EACH STORY OF CONSTRUCTION AND ELSEWHERE AS NEEDED TO PROPERLY LOCATE EACH ELEMENT OF THE PROJECT. CALCULATE AND MEASURE REQUIRED DIMENSIONS WITHIN INDICATED OR RECOGNIZED TOLERANCES.
E. MAINTAIN A SURVEYOR'S LOG OF CONTROL AND RECORD DEVIATIONS FROM LINES AND LEVELS AND ADVISE THE ARCHITECT WHEN DEVIATIONS THAT EXCEED INDICATED OR RECOGNIZED TOLERANCES ARE DETECTED. ON PROJECT RECORD DRAWINGS, RECORD DEVIATIONS THAT ARE ACCEPTED AND NOT CORRECTED.
F. LOCATE AND LAYOUT SITE IMPROVEMENTS INCLUDING PAVEMENT, STAKES FOR GRADING, FILL AND TOPSOIL PLACEMENT, UTILITY SLOPES AND INVERT ELEVATIONS BY INSTRUMENTATION AND APPROPRIATE MEANS.
G. FURNISH INFORMATION NECESSARY TO ADJUST, MOVE OR RELOCATE EXISTING STRUCTURES, UTILITY POLES, LINES, SERVICES OR OTHER APPURTENANCES LOCATED IN OR AFFECTED BY CONSTRUCTION. COORDINATE WITH LOCAL AUTHORITIES HAVING JURISDICTION.
H. WHEN THE CONTRACTOR IS RESPONSIBLE BY CONTRACT DEFINITION TO PROVIDE AND COORDINATE PARTICULAR SCOPES OF WORK (I.E. DESIGN-BUILD) HE SHALL PROVIDE COMPLETE ENGINEERED DRAWINGS, SPECIFICATIONS ALONG WITH DESIGN CALCULATIONS USED, STAMPED AND SIGNED BY A PROFESSIONAL ENGINEER LICENSED IN THE STATE FOR WHICH THE PROJECT IS LOCATED, PRIOR TO CONTRACT SIGNING OR AS OTHERWISE MUTUALLY AGREED UPON.
I. IT SHALL BE THE RESPONSIBILITY OF THE CONTRACTOR TO COORDINATE SPRINKLER DESIGN AND SHOP DRAWINGS WITH THE LOCAL FIRE DEPARTMENT AND THE STATE FIRE MARSHALS OFFICE FOR APPROVAL PRIOR TO COMMENCING WITH ANY ASSOCIATED WORK.

01023 – PROJECT SUBSTITUTIONS
A. REQUEST FOR "ACCEPTABLE SUBSTITUTIONS" IN PRODUCTS, MATERIALS, EQUIPMENT AND METHODS OF CONSTRUCTION REQUIRED BY THE CONTRACT DOCUMENTS AND PROPOSED BY THE CONTRACTOR AFTER THE AWARD OF THE CONTRACT WILL BE CONSIDERED IF RECEIVED WITHIN 30 DAYS OF COMMENCEMENT OF THE APPLICABLE SCOPE OF WORK. SUBMIT (5) FIVE OPAQUE COPIES AND (1) TRANSPARENCY OF EACH REQUEST FOR SUBSTITUTION IN ACCORDANCE WITH PROCEDURES FOR CHANGE ORDERS.
B. THE CONTRACTOR WILL CERTIFY THAT THE SUBSTITUTION PROPOSED IS EQUAL TO OR BETTER THAN THE ITEM IN THE CONTRACT DOCUMENTS AND THAT IT WILL PERFORM ADEQUATELY IN THE APPLICATION INDICATED.
C. THE ARCHITECT WILL ACCEPT OR REJECT THE REQUESTED SUBSTITUTION WITHIN FOURTEEN CALENDAR DAYS OF THE SUBMISSION TO THE ARCHITECT.
D. THE CONTRACTOR SHALL BE RESPONSIBLE FOR LABOR COSTS INCURRED BY THE ARCHITECT TO REVIEW THE PROPOSED SUBSTITUTION.

01025 – SUBSTANTIAL COMPLETION:
SUBSTANTIAL COMPLETION ON THIS PROJECT REQUIRES ALL BUILDING, SITE AND LANDSCAPE WORK TO BE COMPLETED AND THE BUILDING TO BE FULLY AVAILABLE AND FUNCTIONAL AS INTENDED BY THE DRAWINGS AND SPECIFICATIONS FOR THE USE BY THE OWNER.

01026 – PROJECT CLOSEOUT
A. TIME OF CLOSEOUT IS DIRECTLY RELATED TO "SUBSTANTIAL COMPLETION", THEREFORE, THE TIME OF CLOSEOUT MAY BE EITHER A SINGLE TIME PERIOD FOR THE ENTIRE WORK OR A SERIES OF TIME PERIODS FOR INDIVIDUAL ELEMENTS OF THE WORK.
B. ADVISE THE OWNER OF ANY INSURANCE CHANGE-OVERS.
C. UNLESS OTHERWISE SPECIFIED, AS A REQUIREMENT FOR PROCESSING THE FINAL PAYMENT REQUISITION, SUBMIT (5) FIVE COPIES OF THE FOLLOWING TO THE ARCHITECT AND CONSULTANTS:
1. WARRANTIES.
2. RELEASE OF LIENS.
3. MAINTENANCE BONDS.
4. MAINTENANCE AGREEMENTS.
5. OPERATION MANUALS.
6. FINAL CERTIFICATIONS.
7. AS-BUILT RECORD DRAWINGS.
8. CHANGE OVER OF LOCKS AND KEYS.

01027 – RECORD DRAWINGS
A. CONTRACTORS SHALL MAINTAIN ONE SET OF RECORD DRAWINGS, RECORDING ALL CHANGES TO THE PLANS.
B. THE CONTRACTOR WILL FILE THESE DRAWINGS WITH THE OWNER AT PROJECT CLOSEOUT.
C. FINAL AS-BUILT DRAWINGS SHALL INCLUDE BUT ARE NOT LIMITED TO HIDDEN WORK, ALL UNDERGROUND UTILITIES, SERVICES AND DISTRIBUTIONS OF WATER, SEWER, ELECTRICAL, TELEPHONE, CABLE, HEATING AND ALL BUILDING DETAILS.

01028 – SAFETY AND CLEANING.
A. THE CONTRACTOR IS RESPONSIBLE FOR MAINTAINING A CLEAN AND SAFE SITE. ALL DEBRIS WILL BE REMOVED TO A LEGAL DISPOSAL AREA ON A REGULAR BASIS. THE CONTRACTOR IS RESPONSIBLE FOR ALL SAFETY PROCEDURES REQUIRED BY OSHA DURING THE WORK PERIOD.
B. THE CONTRACTOR WILL PROVIDE DURING THE WORK DAY A CLEAR DEFINITION OF THE WORK AREA WILL BE MAINTAINED BY FENCING MATERIAL AND SIGNAGE.
C. BEFORE EXCAVATION BEGINS, INSTALL AN ENCLOSURE FENCE WITH LOCKABLE GATES. INSTALL IN A MANNER THAT WILL PREVENT PEOPLE, DOGS, AND OTHER ANIMALS FROM EASILY ENTERING CONSTRUCTION AREA AND TO MEET OSHA REQUIREMENTS. THE CONTRACTOR IS RESPONSIBLE FOR CONTACTING ALL DIG-SAFE AGENCIES PRIOR TO ANY EXCAVATION.
D. UPON COMPLETION OF ALL WORK ITEMS, IT SHALL BE THE CONTRACTOR'S FINAL RESPONSIBILITY TO REMOVE ALL WASTE MATERIALS, DEBRIS AND RUBBISH FROM THE SITE, AND DISPOSE OF SAME IN A LEGAL, ENVIRONMENTAL SAFE AND LEGITIMATE MANNER. KEEP DRIVEWAYS AND ENTRANCES SERVING THE PREMISE CLEAR AND AVAILABLE TO THE OWNER AND THE OWNER'S EMPLOYEES AT ALL TIMES. ALL MATERIALS STORED ON SITE MUST BE CONFINED TO A SECURED AREA. THE GENERAL CONTRACTOR SHALL PRESENT AND BE RESPONSIBLE FOR A SAFETY PLAN FOR DEALING WITH AUTHORIZED ACCESS THRU THE SITE.

01029 – APPROVALS.
A. "APPROVED" USED WITHOUT ANY FURTHER QUALIFICATIONS, SHALL MEAN REVIEWED AND ACCEPTED BY THE ARCHITECT AND OWNER, AND DOCUMENTED IN WRITING. VERBAL AUTHORIZATION SHALL NOT BE BINDING UPON THE ARCHITECT OR OWNER.
B."ACCEPTABLE SUBSTITUTIONS" SHALL BE DEFINED AS MEETING OR EXCEEDING THE INTENT OF THE MATERIAL DRAWINGS AND SPECIFICATIONS INDICATED AS DETERMINED BY THE ENGINEER/ ARCHITECT. (SUBSTITUTIONS SHALL BE IDENTIFIED AND APPROVED / DENIED TWO WEEKS PRIOR TO BID DATE. NO SUBSTITUTIONS WILL BE ALLOWED AFTER CONTRACT AWARD ON THE BASIS THAT ACCEPTANCE OF A SUBSTITUTION AFTER AWARD MAY HAVE AFFECTED THE BIDDING PROCESS.
C. ALL REQUIRED CONSTRUCTION PROCESS PERMITS AND OCCUPANCY APPROVALS FOR THIS BUILDING ARE THE RESPONSIBILITY OF THE CONTRACTOR, INCLUDING BUT NOT LIMITED TO BUILDING DEPT., PUBLIC WORKS DEPT., FIRE DEPT., AND FINAL OCCUPANCY ETC.

01030 – CUTTING AND PATCHING
A. VISUAL REQUIREMENTS: DO NOT CUT AND PATCH CONSTRUCTION EXPOSED ON THE EXTERIOR OR IN OCCUPIED SPACES, IN A MANNER THAT WOULD, IN THE ARCHITECT'S OPINION, REDUCE THE BUILDING'S AESTHETIC QUALITIES, OR RESULT IN VISUAL EVIDENCE OF CUTTING AND PATCHING.
B. USE MATERIALS THAT ARE IDENTICAL TO EXISTING MATERIALS UNLESS OTHERWISE NOTED. IF IDENTICAL MATERIALS ARE NOT AVAILABLE OR CAN NOT BE USED WHERE EXPOSED SURFACES ARE INVOLVED, USE MATERIALS THAT MATCH EXISTING ADJACENT SURFACES TO THE FULLEST EXTENT POSSIBLE REGARD TO VISUAL EFFECT. USE MATERIALS WHOSE INSTALLED PERFORMANCE WILL EQUAL OR SURPASS THAT OF EXISTING MATERIALS.
C. PATCHING: PATCH WITH DURABLE SEAMS THAT ARE AS INVISIBLE AS POSSIBLE. RESTORE EXPOSED FINISH OF PATCHED AREAS AND EXTEND FINISH INTO RETAINED ADJOINING CONSTRUCTION IN A MANNER THAT WILL ELIMINATE EVIDENCE OF PATCHING AND REFINISHING.
D. WORK, WHICH IN THE ARCHITECT'S OPINION WAS CUT AND/OR PATCHED IN AN UNSATISFACTORY MANNER, SHALL BE REMOVED AND REPLACED TO THE ARCHITECT AND BUILDING OWNER'S SATISFACTION, AT THE CONTRACTOR'S EXPENSE.

01033 – PERMITTING AND FEES

THE CONTRACTOR IS SOLELY RESPONSIBLE FOR ALL CONSTRUCTION RELATED FEES.

Sherman Greiner Halle' Ltd.
ARCHITECTS• LANDSCAPE ARCHITECTS• PLANNERS
2 Capital Plaza, Concord, New Hampshire 03301 4911
(603) 225-0640 (FAX) 225-0621
Email: info@sghltd.com www.sghltd.com

10/16/2000
100% SUBMITTAL

REGISTERED ARCHITECT
PATRICIA C. SHERMAN No. 944
THE STATE OF NEW HAMPSHIRE

VHB Vanasse Hangen Brustlin, Inc.

STATE OF NEW HAMPSHIRE
PASSENGER RAIL STATION – EXETER, N.H.
GENERAL NOTES

REVISION DATE	DRAWING NAME	SHEET SCALE	FEDERAL PROJECT NO.	STATE PROJECT NO.	SHEET NO.	TOTAL SHEETS
		AS SHOWN		10025-A	A0-1	29 OF 43

2275a01.dwg 81500 114144

ABBREVIATIONS

ABV	above
AFF	above finish floor
ACC	access
AP	access panel
AC	acoustical
ACT	acoustical ceiling tile
ADD	addendum
ADH	adhesive
ADJ	adjacent
ADJT	adjustable
AGG	aggregate
A/C	air conditioning
ALT	alternate
AL	aluminum
ANC	anchor (age)
AB	anchor bolt
ANOD	anodized
APX	approximate
ARCH	architect (ural)
ASPH	asphalt
AT	asphalt tile
AUTO	automatic
BSMT	basement
BRG	bearing
BPL	bearing plate
BJT	bed joint
BM	bench mark
BEL	below
BET	between
BVL	beveled
BIT	bituminous
BLK	block
BLKG	blocking
BD	board
BS	both sides
BW	both ways
BOT	bottom
BRK	brick
BRZ	bronze
BLDG	building
BBD	bulletin board
CAB	cabinet
CPT	carpet (ed)
CSMT	casement
CI	cast iron

CIPC	cast-in-place concrete
CST	cast stone
CB	catch basin
CK	caulking
CLG	ceiling
CHT	ceiling height
CEM	cement (itious)
CER	ceramic
CT	ceramic tile
CHBD	chalkboard
CHAM	chamfer
CIR	circle
CIRC	circumference
CO	clean out
CLR	clear (ance)
COL	column
COMB	combination
COMPO	composition
COMP	compress (ed)
CONC	concrete
CMU	concrete masonry unit
CX	connection
CONST	construction
CONT	continue (ous)
CONTR	contractor
CLL	contract limit line
CJT	control joint
CPR	copper
CG	corner guard
CORR	corrugated
CTR	counter
CFL	counterflashing
CS	countersink
CRS	cabinet(ets)
CYD	cubic yard
DPR	damper
DP	dampproofing
DEM	demolish
DMT	demountable
DEP	depressed
DTL	detail
DIAG	diagonal
DIAM	diameter
DIM	dimension
DIV	division

DHW	domestic hot water
DR	door
DH	double hung
DS	downspout
DR	drain
DT	drain tile
DWR	drawer
DWG	drawing
DF	drinking fountain
DW	dumbwaiter
EF	each face
E	east
ELEC	electrical
EP	electrical panelboard
EWC	electric water cooler
ELEM	element
EL	elevation
ELEV	elevator
EMR	emergency
ENC	enclose (ure)
EQ	equal
EQP	equipment
EST	estimate
EXCA	excavate
EXH	exhaust
EF	exhaust fan
EXG	existing
EB	expansion joint
EXP	exposed
EXT	exterior
FB	face brick
FOC	face of concrete
FOF	face of finish
FOM	face of masonry
FOS	face of studs
FF	factory finish
FAS	fasten (ers)
FN	fence
FBD	fiberboard
FGL	fiberglass
FT	fin tube
FIN	finish (ed)
FFE	finished floor elevation
FFL	finished floor line
FA	fire alarm

FBRK	fire brick
FE	fire extinguisher
FEC	fire extinguisher cabinet
FP	fireproof
FLG	flashing
FLX	flexible
FLR	floor (ing)
FCO	floor cleanout
FD	floor drain
FPL	floor plate
FLUR	flourescent
FJT	flush joint
FTG	footing
FND	foundation
FR	frame (d)
FS	full size
FBO	furnished by others
FUR	furred (ing)
FUT	future
GA	guage
GV	galvanized
GI	galvanized iron
GP	galvanized pipe
GSS	galvanized sheet steel
GKT	gasket (ed)
GC	general contractor
GL	glass, glazing
GLB	glass block
GLF	glass fiber
GCMU	glazed concrete masonry unit
GB	grab bar
GD	grade, grading
GRN	granite
GVL	gravel
GF	ground face
GT	grout
GWB	gypsum wallboard
HCAP	handicapped
HBD	hardboard
HDW	hardware
HWD	hardwood
HDR	header
HTG	heating
HVAC	heating-ventilating-air conditioning
HD	heavy duty

HT	height
HX	hexagonal
HC	hollow core
HM	hollow metal
HK	hook
HOR	horizontal
HW	hot water
HWH	hot water heater
HWR	hot water return
HWS	hot water supply
INCL	include (d)
ID	inside diameter
INS	insulate (d)
INT	interior
INTM	intermediate
INV	invert
IPS	iron pipe size
JT	joint
JF	joint filler
J	joist
KPL	kickplate
KO	knockout
LBL	label
LAB	laboratory
LB	lag bolt
LAM	laminate (d)
LAV	lavatory
LH	left hand
L	length
LT	light
LP	lightproof
LW	lightweight
LTL	lintel
LL	live load
LVR	louver
LPT	low point
MB	machine bolt
MH	man hole
MFR	manufacture (r)
MAS	masonry
MO	masonry opening
MTL	material (s)
MAX	maximum
MECH	mechanical
MC	medicine cabinet

MED	medium
MDO	medium density overlay
MBR	member
MMB	membrane
MET	metal
MFD	metal floor decking
MTFR	metal furring
MRD	metal roof decking
MT	metal threshold
MWK	millwork
MIN	minimum
MIR	mirror
MISC	miscellaneous
MOD	modular
MLD	moulding
MR	moisture resistant
MT	mount (ed)
MOV	movable
NL	nailable
NAT	natural
NOM	nominal
N	north
NIC	not in contract
NTS	not to scale
OC	on center (s)
OPG	opening
OJ	open-web joist
OPP	opposite
OD	outside diameter
OA	overall
OH	overhead
PTN	partition
PNL	panel
PB	panic bar
PTD	painted
PTR	paper towel receptor
PAR	parallel
PK	parking
PBD	particle board
PT	paper towel dispenser
PV	pave (ing)
PVMT	pavement
PED	pedestal
PERF	perforated
PERI	perimeter

PLAS	plaster
PLAM	plastic laminate
PL	plate
PG	plate glass
PWD	plywood
PT	point
PVC	polyvinyl chloride
PCF	pounds per cubic foot
PFL	pounds per linear foot
PSF	pounds per square foot
PSI	pounds per square inch
PCC	precast concrete
PFB	prefabricated
PFN	prefinish (ed)
PRF	preform (ed)
PSC	prestressed concrete
PL	property line
QT	quarry tile
RAD	radius
RL	rail (ing)
REF	reference
RFL	reflect (ed)
REFG	refrigerator
REG	register
RE	reinforce (d)
RCP	reinforced concrete pipe
REM	remove
RES	resilient
RET	return
RA	return air
RVS	reverse
REV	revision
RH	right hand
ROW	right of way
R	riser
RD	roof drain
RFH	roof hatch
RFG	roofing
RM	room
RO	rough opening
RB	rubber base
RBT	rubber tile
SFGL	safety glass
SCH	schedule
SCN	screen

SNT	sealant
STG	seating
SEC	section
SSK	service sink
SHTH	sheathing
SHT	sheet
SG	sheet glass
SH	shelf, shelving
SIM	similar
SKL	skylight
SL	sleeve
SC	solid core
SP	sound proof
S	south
SPC	spacer
SPK	speaker
SPL	special
SPEC	specification
SQ	square
SST	stainless steel
STD	standard
STA	station
ST	steel
STO	storage
SD	storm drain
STR	structural
SAT	suspended acoustical tile
SYM	symmetry (ical)
SYN	synthetic
SYS	system
TKBD	tackboard
TEL	telephone
TV	television
TZ	terrazzo
TSTAT	thermostat
THK	thick (ness)
THR	threshold
TPTTN	toilet partition
TPD	toilet paper dispenser
TOL	tolerance
T&G	tongue & groove
TSL	top of slab
TST	top of steel
TW	top of wall
TB	towel bar

TR	transom
T	tread
TYP	typical
UC	undercut
UNF	unfinished
UR	urinal
VJ	v-joint
VBA	vapor barrier
VAR	varnished
VNR	veneer
VTR	vent through roof
VERT	vertical
VG	vertical grain
VIN	vinyl
VCT	vinyl composite tile
VB	vinyl base
VF	vinyl fabric
VT	vinyl tile
WSCT	wainscot
WCO	wall cleanout
WTW	wall to wall
WH	wall hung
WC	water closet
WHA	water hammer arrestor
WP	water proofing
WR	water repellent
WS	waterstop
WWF	welded wire fabric
W	west
WHB	wheel bumper
WIN	window
WM	wire mesh
WG	wired glass
WO	without
WD	wood
WB	wood base
WPT	working point
WI	wrought iron

CONVERSION CHART

LENGTH

1 inch (in)		= 2.54 cm
1 foot (ft)	= 12 in	= .3048 m
1 yard (yd)	= 3 ft	= .9144 m
1 mile (mi)	= 1780 yd	= 1.6093 km
1 nautical mile	= 1.152 mi	= 1.853 km
1 millimeter (mm)		= .0394 in
1 centimeter (cm)	= 10 mm	= .3937 in
1 meter (m)	= 1000 mm	= 1.0936 yd
1 kilometer (km)	= 1000 m	= .6214 mi

AREA

1 square inch (in^2)		= 6.4516 cm^2
1 square foot (ft^2)	= 144 in^2	= .093 m^2
1 square yard (yd^2)	= 9 ft^2	= .8361 m^2
1 acre	= 4840 yd^2	= 4046.86 m^2
1 square mile (mi^2)	= 640 acres	= 2.59 km^2
1 sq. centimeter (cm^2)	= 100 mm^2	= .155 in^2
1 sq. meter (m^2)	= 10,000 cm^2	= 1.196 yd^2
1 hectare (ha)	= 10,000 m^2	= 2.4711 acres
1 sq. kilometer (km^2)	= 100 ha	= .3861 mi^2

WEIGHT

1 ounce (oz)	= 437.5 grains	= 28.35 g
1 pound (lb)	= 16 oz	= .4536 kg
1 short ton	= 2000 lb	= .9072 t
1 long ton	= 2240 lb	= 1.0161 t
1 milligram (mg)		= .0154 g
1 gram (g)	= 1000 mg	= .0353 oz
1 kilogram (kg)	= 1000 g	= 2.2046 lb
1 tonne (t)	= 1000 kg	= 1.1023 short tons
1 tonne (t)		= .9842 long ton

VOLUME

1 cubic inch (in^3)		= 16.387 cm^3
1 cubic foot (ft^3)	= 1728 in^3	= .028 m^3
1 cubic yard (yd^3)	= 27 ft^3	= .7646 m^3
1 fluid ounce (fl oz)		= 2.957 cl
1 liquid pint (pt)	= 16 fl oz	= .4732 l
1 liquid quart (qt)	= 2 pt	= .946 l
1 gallon (gal)	= 4 qt	= 3.7852 l

VOLUME

1 dry pint		= .5506 l
1 bushel (bu)	= 64 dry pints	= 35.2381 l
1 cubic centimeter (cm^3)		= .061 in^3
1 cubic decimeter (dm^3)	= 1000 cm^3	= .353 ft^3
1 cubic meter (m^3)	= 1000 dm^3	= 1.3079 yd^3
1 liter (l)	= 1 dm^3	= .2642 gal
1 hectoliter (hl)	= 100 l	= 2.8378 bu

SYMBOLS

EARTH
BRICK
CONCRETE MASONRY UNIT
CONCRETE
RIGID INSULATION
DIMENSIONAL LUMBER
BLANKET INSULATION
FINISH WOOD
BLOCKING
STEEL or METAL
DOOR TAG (105)
WINDOW TAG (B)
SIGNAGE (A)
ROOM NAME 115 — ROOM NUMBER TAG
BUILDING SECTION MARK (3-5)
WALL SECTION MARK (1 A2-7)
REVISION CLOUD (9)
ELEVATION DATUM POINT
WALL TYPE TAG (1)
FIRE EXTINGUISHER (FE)
INTERIOR ELEVATION (1 A1-3 2)
SUPPLY DIFFUSER
RETURN OR EXHAUST
RECESSED CAN
SURFACE MOUNTED FLUORESCENT
FLUORESCENT TROFFER
CEILING FIXTURE
WALL LIGHT FIXTURE
EMERGENCY LIGHT w/ BATTERY BACKUP
EXIT LIGHT
RECEPTACLE
COMMUNICATIONS OUTLET
SMOKE DETECTOR (S)

TYPICAL INTERIOR AND EXTERIOR SIGNAGE REQUIREMENTS

NOTE: UNLESS OTHERWISE NOTED, OR MORE SPECIFICALLY DEFINED IN THE WRITTEN SPECIFICATIONS PROVIDE ONE SIGN PER INTERIOR DOORWAY. PROVIDE TWO SIGNS FOR DOORS IN PATHS OF TRAVEL (ie HALLS) PROVIDE ONE HANDICAPPED PARKING SIGN FOR EACH HANDICAPPED PARKING SPACE.

SIGN PANEL	
SIZE	AS SHOWN
MATERIALS	ACRYLIC/ ULTRA MATTE
EDGES	SQUARE
CORNERS	ROUND 3/8"
COLORS	BACKGROUND – BLACK
BACKING	COPY – MATTE WHITE
FRAMES AND BRACKETS	
TYPE	NA
FRAME SIZE	NA
FRAME COLOR	NA
INTERIOR FRAME SUBSTRATE	NA
BACKING	NA
GRAPHICS	
APPLICATION	APPLIED RAISED 1/32"
TYPE STYLE	PALANTINO
COPY WEIGHT	3" UNLESS NOTED
COPY HEIGHT	1" HIGH UNLESS NOTED
FRAMES–BRACKET–MOUNTING	
TYPE	VANDAL RESISTENT, SCREW ATTATCHED BACK PLATE.
HEIGHT & LOCATION	60" TO CENTER OF SIGN, LATCH SIDE OF DOOR

SIGN 'A' – INFORMATIONAL FLOOR IDENTIFICATION

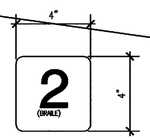

PROVIDE ONE PER LANDING OF STAIRWAY.

SIGN 'B' – INFORMATIONAL IDENTIFICATION

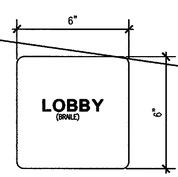

PROVIDE ONE PER ILLUMINATED EXIT SIGN LOCATION.

SIGN 'C' – INFORMATIONAL PRIVATE ROOM IDENTIFICATION

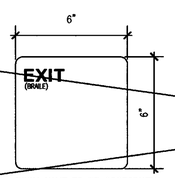

ROOM NAME TO BE COORDINATED WITH DOOR SCHEDULE "SIGNAGE" COMMENTS.

SIGN 'D' – PRIVATE IDENTIFICATION (OFFICES, ETC.) BACK PAINT WITH CLEAR FACE "ROOM NAME" SLOT COLOR BY ARCHITECT

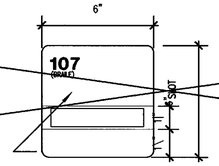

SIGN 'E' – INFORMATIONAL PUBLIC IDENTIFICATION (RESTROOMS, TELEPHONE, STAIRWAYS, ELEVATORS, ETC.)

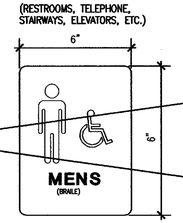

NOTES:
1. ROOM NAME TO BE COORDINATED WITH DOOR SCHEDULE "SIGNAGE" COMMENTS
2. ROOM NUMBER WITH COORDINATED BRAILE AND SIGNS WITH ROOM NAME/COORDINATED BRAILLE SHALL BE TAKEN FROM THE FINISH SCHEDULE "ROOM NAME" DESIGNATIONS.

BOTH OF THESE REQUIREMENTS SHALL BE VERIFIED IN WRITING AND APPROVED BY OWNER PRIOR TO SIGN CONSTRUCTION WITH A FULL DETAILED SCHEDULE OF ALL SIGNS TO BE SUPPLIED BY THE SIGN CONTRACTOR.

SIGN 'H' – INFORMATIONAL IDENTIFICATION

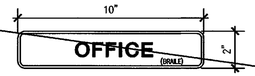

SIGN 'F' – STAIRWELL IDENTIFICATIONS (FOR STAIRS SERVING 4 OR MORE STORIES)

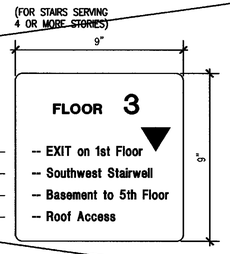

PROVIDE ONE PER LANDING OF STAIRWAY.

SIGN 'G' – EXTERIOR SITE (HANDICAPPED PARKING)

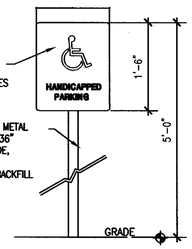

AMERICANS WITH DISABILITIES ACT (A.D.A.) MANEUVERING CLEARANCES

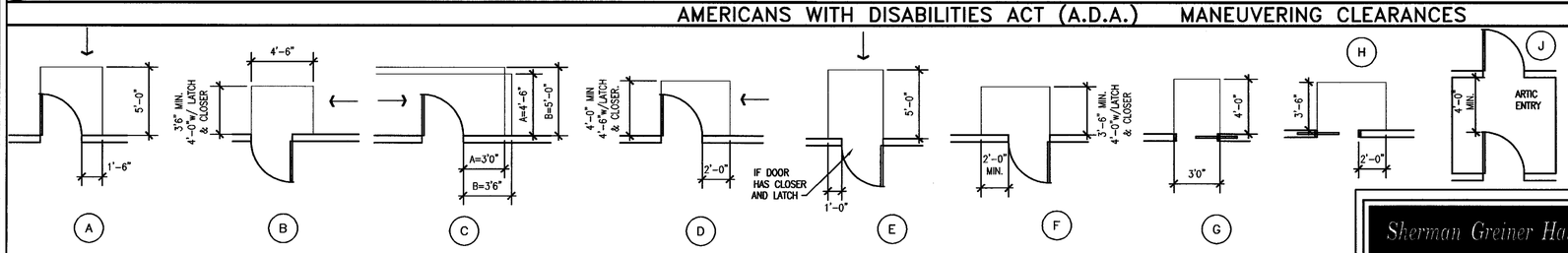

GENERAL NOTE: ARROW INDICATES DIRECTION OF APPROACH/ TRAVEL

Sherman Greiner Halle' Ltd.
ARCHITECTS • LANDSCAPE ARCHITECTS • PLANNERS
2 Capital Plaza, Concord, New Hampshire 03301 4911
(603) 225-0640 (FAX) 225-0621
Email: info@sghltd.com www.sghltd.com

10/16/2000
100% SUBMITTAL

REGISTERED ARCHITECT PATRICIA C. SHERMAN THE STATE OF NEW HAMPSHIRE

VHB Vanasse Hangen Brustlin, Inc.

STATE OF NEW HAMPSHIRE
PASSENGER RAIL STATION – EXETER, N.H.

ABBREVIATIONS, CONVERSIONS, SYMBOLS

REVISION DATE	DRAWING NAME	SHEET SCALE	FEDERAL PROJECT NO.	STATE PROJECT NO.	SHEET NO.	TOTAL SHEETS
		AS SHOWN		10025-A	A0-3	30 OF 43

ARCHITECTURAL EQUIPMENT AND FIXTURE MOUNTING HEIGHTS

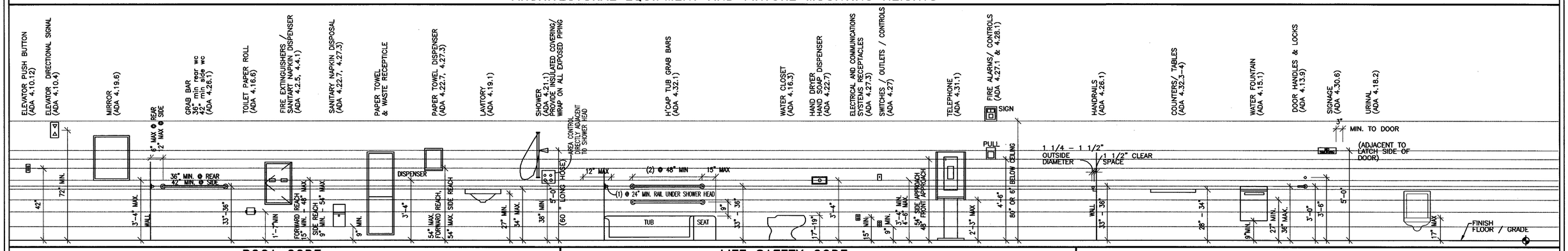

BOCA CODE

PROJECT Passenger Rail Open Platform
LOCATION Exeter, NH
DATE 22-Mar-00

Platform Square Footage 924 sf

1996 BOCA CODE ANALYSIS		Criteria	Allowed	Reference
Building Construction Type		Proposed	5B	Table 503
Use Group		Proposed	A-3 Assembly	Section 303.4 Section 304.0
Height / Area	Use A-3	Allowed Height Proposed Height	1 Storey / 20 Feet 1 Storey / 14 Feet	Table 503
		Allowed Net Area Proposed Bldg Area	4,200 SF 924 SF	Table 503

5B Unprotected	Required	Proposed	
Seperation Protection			
Mechanical Room (If gas-fired)	na	na	Table 302.1.1
Storage Rooms >50 & <100 SF	na	na	Table 302.1.1
Boiler/ Furnace Rooms	na	na	Table 302.1.1
Waste/ Soiled Linen	na	na	Table 302.1.1
Paint storage	na	na	Table 302.1.1
Waste/ Soiled Linen Chute	na	na	Table 302.1.1
Storage Rooms >100 SF	na	na	Table 302.1.1
Maintenance room	na	na	Table 302.1.1
Fire Resistance Requirements			
Exterior Load Bearing Walls	0 hr	0 hr	Table 602
Exterior Nonload Bearing walls	0 hr	0 hr	Section 705.2.4
Exterior wall fire ratings	0 hr	0 hr	705.2.4
Firewalls and Party Walls	na	na	707
Fire Enclosure of Exits	na	na	1014.11
Shafts	na	na	710.3
Stairway Construction	na	na	Section 1014.11
Elevator hoistways	na	na	710.3
Mixed Use and Fire Areas	na	na	313.1.2.e
Other seperation assemblies	na	na	Table 602
Exit Access Corridors	na	na	Section 711.2, 713.3.4, 1014.11.4
Tenant Space Seperation	na	na	Table 602
Dwelling Unit / Guestroom Seperation	na	na	711.1
Smoke Barriers	na	na	Table 602
Nonload partitions	na	na	Table 602
Fire Blocking	na	na	721.7.2.1
Draft Stopping	no	no	721.7
Interior load walls, etc	0 hr	0 hr	Table 602
Structural members	0 hr	0 hr	Table 602
Floor Construction include beams	0 hr	0 hr	Table 602
Roof Construction	0 hr	0 hr	Table 602
Width of Corridor/ doors			
50 or more people	44"	na	Section 1011.3
Occupant Load			
Station	924 sf / 15 sf / person	62 persons	Table 1008.1.2
Number of Exits / w/o Sprinkler	na	na	Table 1009.2
Fire Alarm System	Not Required	Not provided	Section 918
Automatic Fire Suppression (NFPA13)	Not Required	Not provided	Table 302.1.1, 904, 906
Length of Travel without Sprinkler	200 FT max.	<200 FT	Table 1006.5
Dead End Corridors	na	na	1011.2
Smoke Detection			
Audible	Not Required	Not provided	Section 918.8.1
Visual	Not Required	Not provided	Section 918.8.1
Fire Extinguishers	Not Required	Not provided	Section 921

LIFE SAFETY CODE

1997 LIFE SAFETY CODE	Criteria	Proposed	Reference
Passenger Station			
Building Construction Type		V (000)	Table A-6-2.1
Use Group		New Assembly Occupancies	Chapter 8
Occupant Load	924 sf / 15 sf / person	62 persons	8-1.7
Corridor Width	44" min.	na	Section 16-2.3.3
Common Path of Travel	20 FT	na	8-2.5.1
Dead End Corridor	20 FT	na	8-2.5.6.2
Exits / Width			
Min. Egress Door Width	32"	na	5-2.1.2.2
Exit Width	36"	na	
Number of Exits	na	na	5-4.1.2
Length of Travel w/ sprinkler	150 ft	<150 ft	8-2.6.1
Automatic Sprinkler System	Not Required	Not provided	Section 8-3.5.1
Fire Alarm/ Detection System	Not Required	Not provided	Section 8-3.4.1
Fire Resistance Requirements Construction type V (000) reference to BOCA 5B.			Table A-6-2.1
Exterior Bearing Walls	0 hr	0 hr	Table A-6-2.1
Interior Bearing Walls	0 hr	0 hr	Table A-6-2.1
Columns	0 hr	0 hr	Table A-6-2.1
Beams, Girders, Trusses	0 hr	0 hr	Table A-6-2.1
Floor	0 hr	0 hr	Table A-6-2.1
Roof	0 hr	0 hr	Table A-6-2.1
Exterior Nonbearing walls	0 hr	0 hr	Table A-6-2.1

2000 LIFE SAFETY CODE

NFPA 130 standard for Fixed Guideway Transit and Passenger Rail Systems

Chapter 2 - Stations This chapter is written for fixed guideway transit stations, A-2-1.1

SUPPRESSION SYSTEM (N.I.C.)

FIRE ALARM SYSTEM

Sherman Greiner Halle' Ltd.
ARCHITECTS • LANDSCAPE ARCHITECTS • PLANNERS
2 Capital Plaza, Concord, New Hampshire 03301 4911
(603) 225-0640 (FAX) 225-0621
Email: info@sghltd.com www.sghltd.com

10/16/2000
100% SUBMITTAL

REGISTERED ARCHITECT PATRICIA C. SHERMAN No. 844 THE STATE OF NEW HAMPSHIRE

Vanasse Hangen Brustlin, Inc.

STATE OF NEW HAMPSHIRE
PASSENGER RAIL STATION - EXETER, N.H.

CODE REVIEW AND MOUNTING HEIGHTS

REVISION DATE	DRAWING NAME	SHEET SCALE	FEDERAL PROJECT NO.	STATE PROJECT NO.	SHEET NO.	TOTAL SHEETS
		AS SHOWN		10025-A	A0-4	31 OF 43

2275d04.dwg 81500 114338

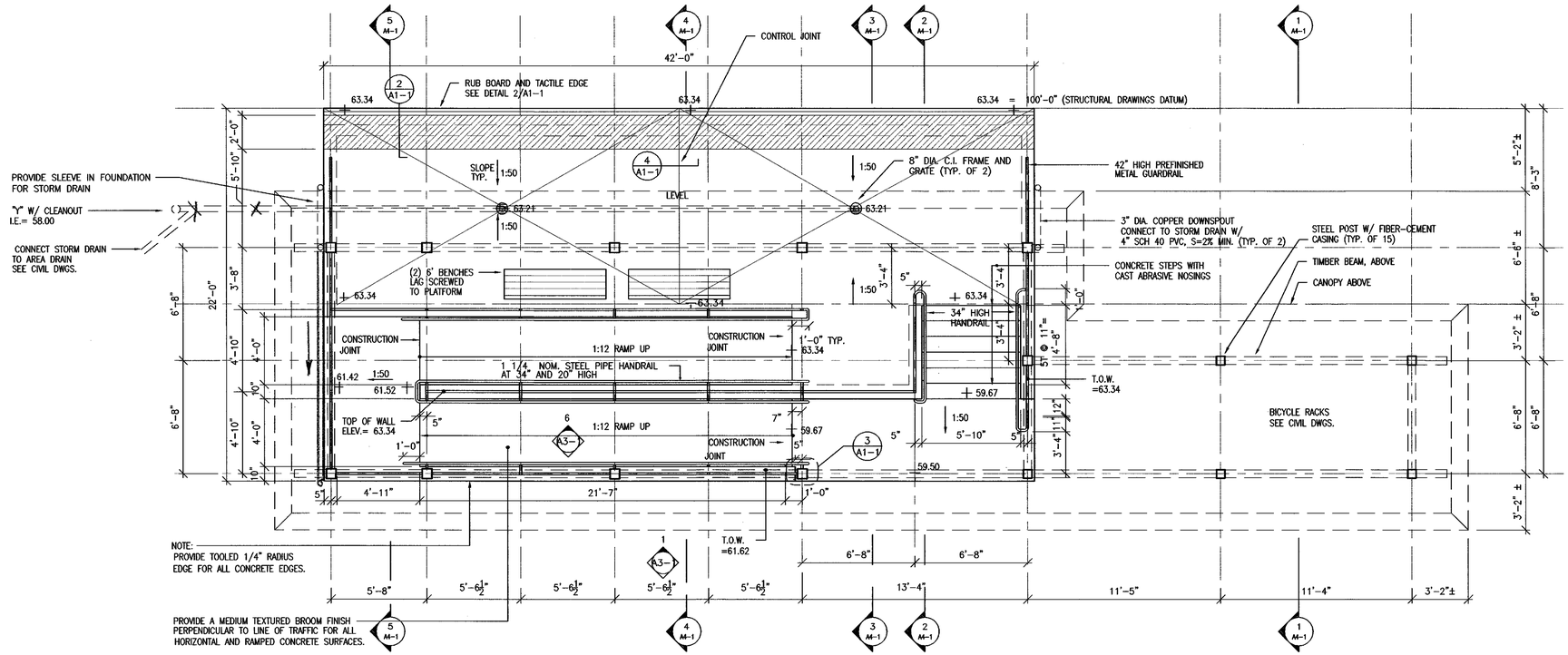

1 A1-2 FLOOR PLAN @ 1/4"=1'-0"

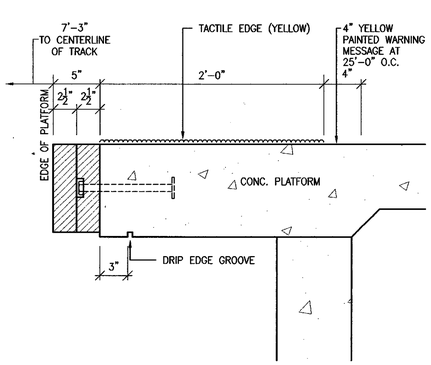

2 A1-1 PLATFORM EDGE SECTION 1 1/2" = 1'-0"

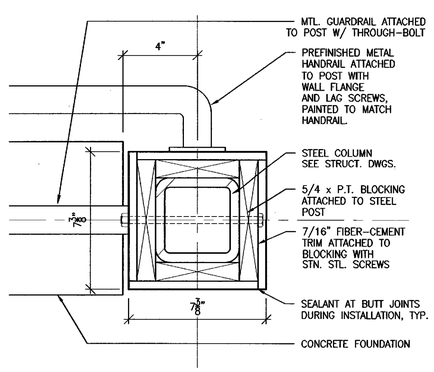

3 A1-1 POST PLAN SECTION 3" = 1'-0"

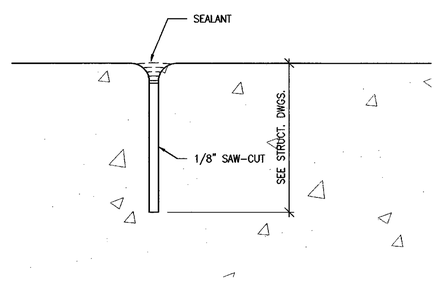

4 A1-1 CONTRACTION JOINT 1'-0" = 1'-0"

PLAN NOTES:

1. GC SHALL REVIEW PRIOR TO INSTALLATION ANY CONFLICT OF ENGINEERING TRADE DEVICES (I.E. FIRE ALARM STROBES) WITH ARCHITECTURAL DETAILS AND BRING THOSE DESCREPANCIES TO THE ARCHITECT FOR REVIEW.

Sherman Greiner Halle' Ltd.
ARCHITECTS • LANDSCAPE ARCHITECTS • PLANNERS
2 Capital Plaza, Concord, New Hampshire 03301 4911
(603) 225-0640 (FAX) 225-0621
Email: info@sghltd.com www.sghltd.com

10/16/2000
100% SUBMITTAL

REGISTERED ARCHITECT PATRICIA E. SHERMAN No. 944 THE STATE OF NEW HAMPSHIRE

Vanasse Hangen Brustlin, Inc.

As-Built Plans

STATE OF NEW HAMPSHIRE

PASSENGER RAIL STATION – EXETER, N.H.

FLOOR PLAN

REVISION DATE	DRAWING NAME	SHEET SCALE	FEDERAL PROJECT NO.	STATE PROJECT NO.	SHEET NO.	TOTAL SHEETS
		AS SHOWN		10025-A	A1-1	32 of 43

2275a11.dwg 111000 110839

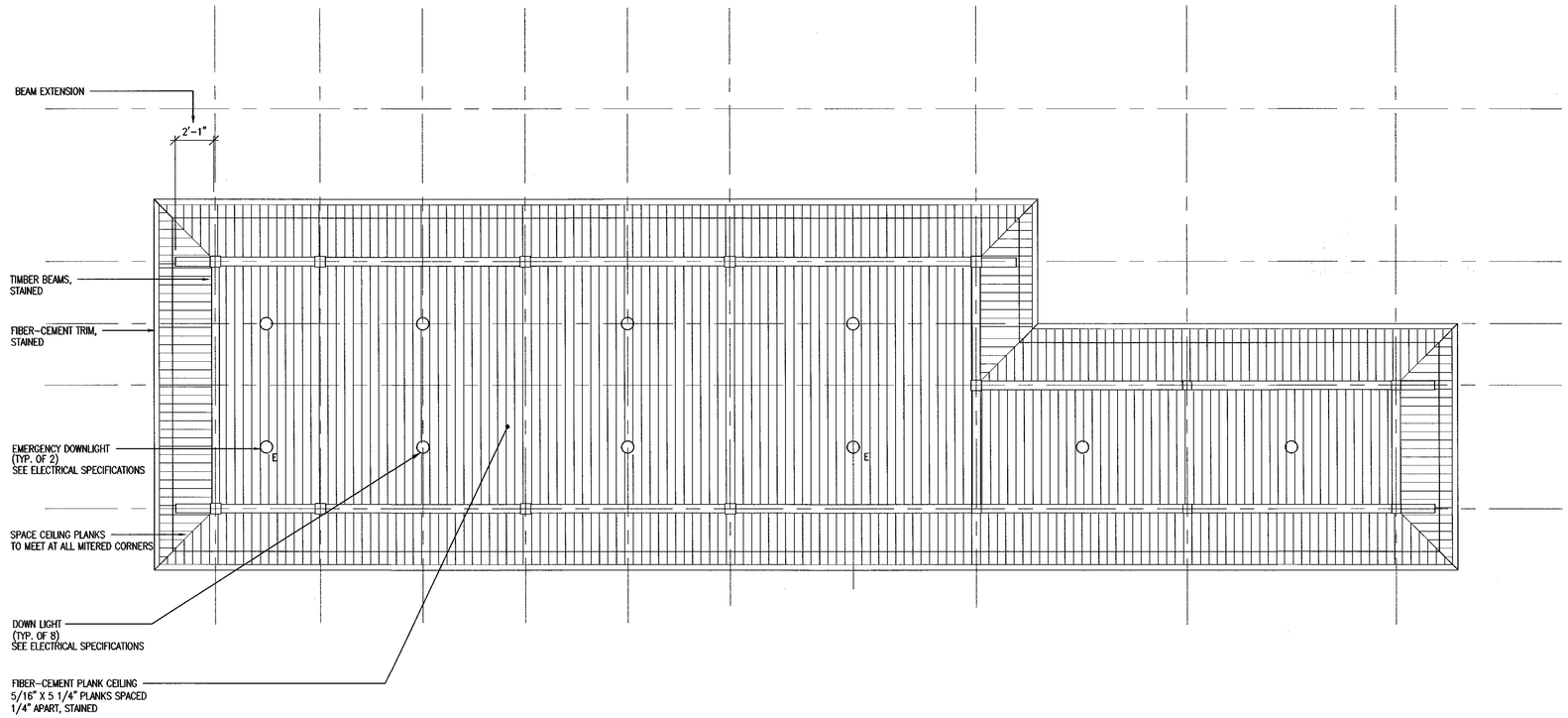

1 / A1-2 FLOOR PLAN @ 1/4"=1'-0"

2 / A1-1 NOT USED N.T.S.

3 / A1-1 NOT USED N.T.S.

4 / A1-1 NOT USED N.T.S.

PLAN NOTES:

1. GC SHALL REVIEW PRIOR TO INSTALLATION ANY CONFLICT OF ENGINEERING TRADE DEVICES (I.E. FIRE ALARM STROBES) WITH ARCHITECTURAL DETAILS AND BRING THOSE DESCREPANCIES TO THE ARCHTECT FOR REVIEW.
2. SEE ELECTRICAL SPECIFICATIONS FOR FIXTURE TYPE AND LIGHTING INSTALLATION REQUIREMENTS.

Sherman Greiner Halle' Ltd.
ARCHITECTS • LANDSCAPE ARCHITECTS • PLANNERS
2 Capital Plaza, Concord, New Hampshire 03301 4911
(603) 225-0640 (FAX) 225-0621
Email: info@sghltd.com www.sghltd.com

10/16/2000
100% SUBMITTAL

REGISTERED ARCHITECT PATRICIA C. SHERMAN No. 944 THE STATE OF NEW HAMPSHIRE

Vanasse Hangen Brustlin, Inc.

STATE OF NEW HAMPSHIRE

PASSENGER RAIL STATION – EXETER, N.H.

REFLECTED CEILING PLAN

REVISION DATE	DRAWING NAME	SHEET SCALE	FEDERAL PROJECT NO.	STATE PROJECT NO.	SHEET NO.	TOTAL SHEETS
		AS SHOWN		10025-A	A1-2	33 of 43

2275s12.dwg 111000 111018

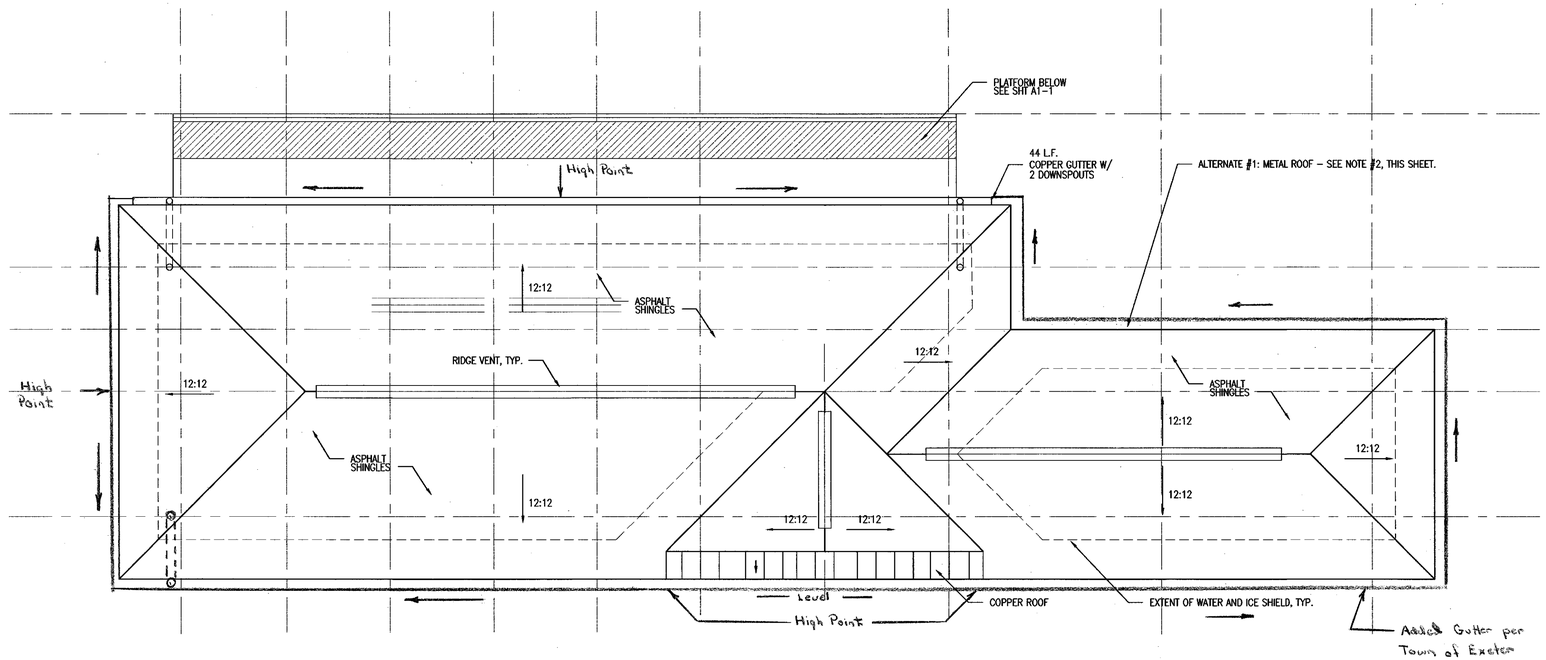

1 A1-2 ROOF PLAN
@ 1/4" = 1'-0"

2 A1-2 NOT USED
N.T.S.

3 A1-2 NOT USED
N.T.S.

4 A1-2 NOT USED
N.T.S.

ROOF PLAN NOTES:

1. GC SHALL REVIEW PRIOR TO INSTALLATION ANY CONFLICT OF ENGINEERING TRADE DEVICES (I.E. FIRE ALARM STROBES) WITH ARCHITECTURAL DETAILS AND BRING THOSE DESCREPANCIES TO THE ARCHITECT FOR REVIEW.
2. ALTERNATE #1 ROOFING TO BE METAL ROOFING WITH ICE AND WATER SHIELD OVER ENTIRE ROOF SURFACE.

Sherman Greiner Halle' Ltd.
ARCHITECTS · LANDSCAPE ARCHITECTS · PLANNERS
2 Capital Plaza, Concord, New Hampshire 03301 4911
(603) 225-0640 (FAX) 225-0621
Email: info@sghltd.com www.sghltd.com

10/16/2000
100% SUBMITTAL

REGISTERED ARCHITECT PATRICIA C. SHERMAN No. 944 THE STATE OF NEW HAMPSHIRE

Vanasse Hangen Brustlin, Inc.

As-Built Plans

STATE OF NEW HAMPSHIRE

PASSENGER RAIL STATION – EXETER, N.H.

ROOF PLAN

REVISION DATE	DRAWING NAME	SHEET SCALE	FEDERAL PROJECT NO.	STATE PROJECT NO.	SHEET NO.	TOTAL SHEETS
		AS SHOWN		10025-A	A1-3	34 OF 43

2275s13.dwg 81300 124617

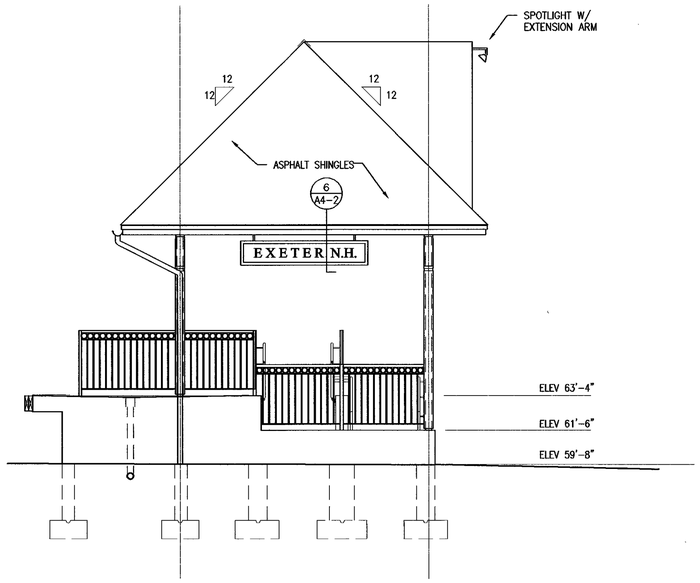

1 A3-1 SOUTH ELEVATION
1/4" = 1'-0"

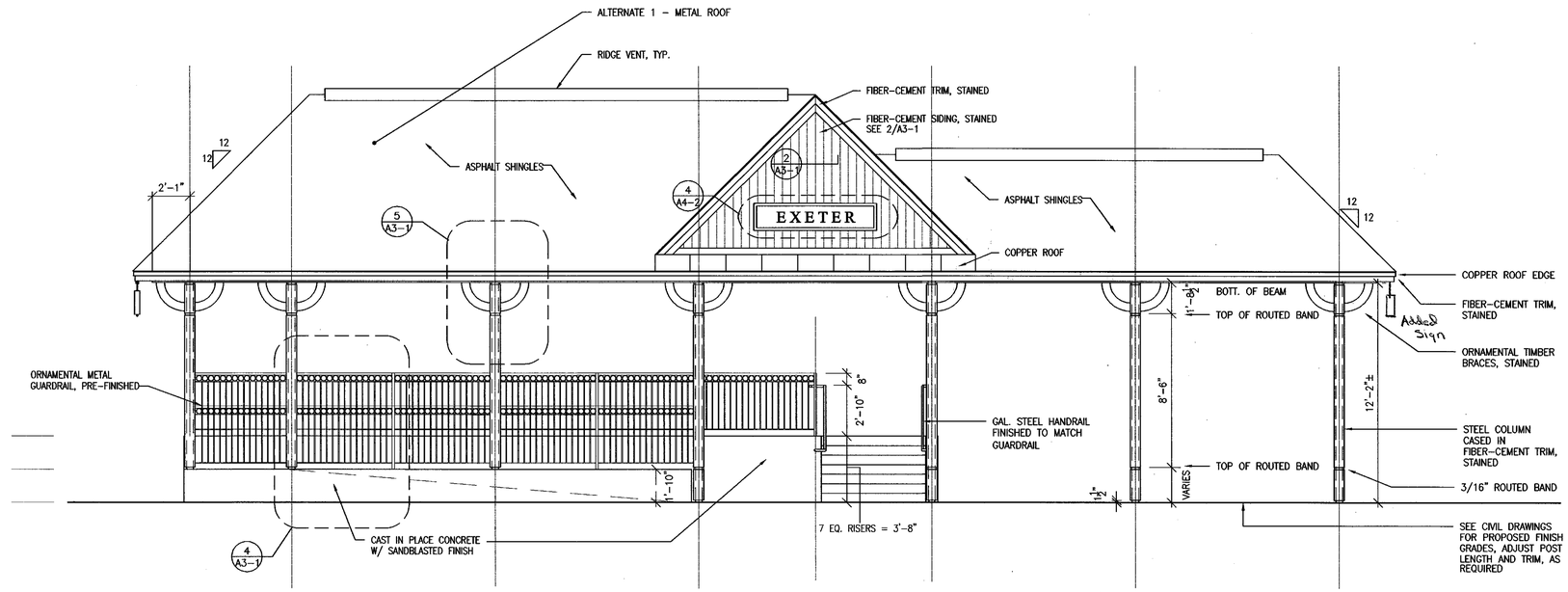

2 A3-1 EAST ELEVATION
1/4" = 1'-0"

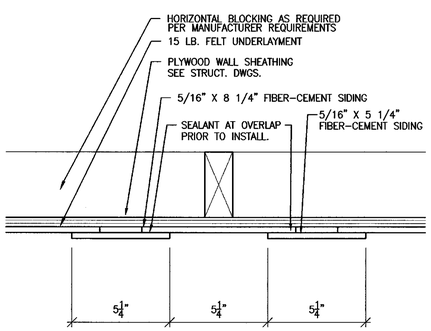

3 A3-1 SIDING SECTION DETAIL
3" = 1'-0"

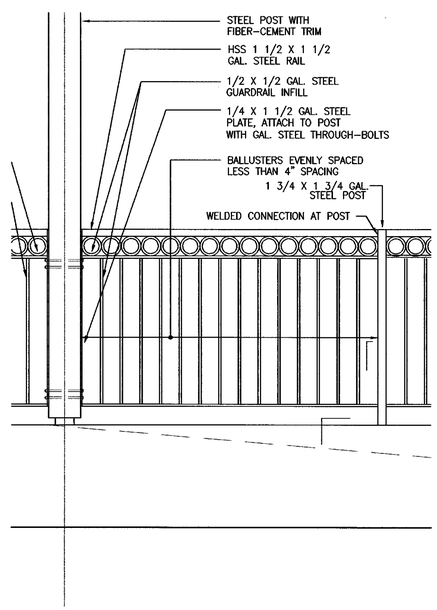

4 A3-1 GUARDRAIL ELEVATION
3/4" = 1'-0"

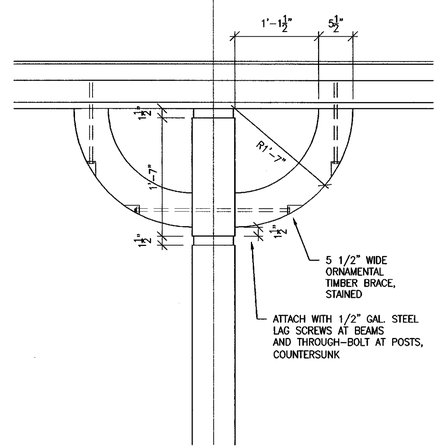

5 A3-1 ORNAMENTAL BRACE ELEV.
1" = 1'-0"

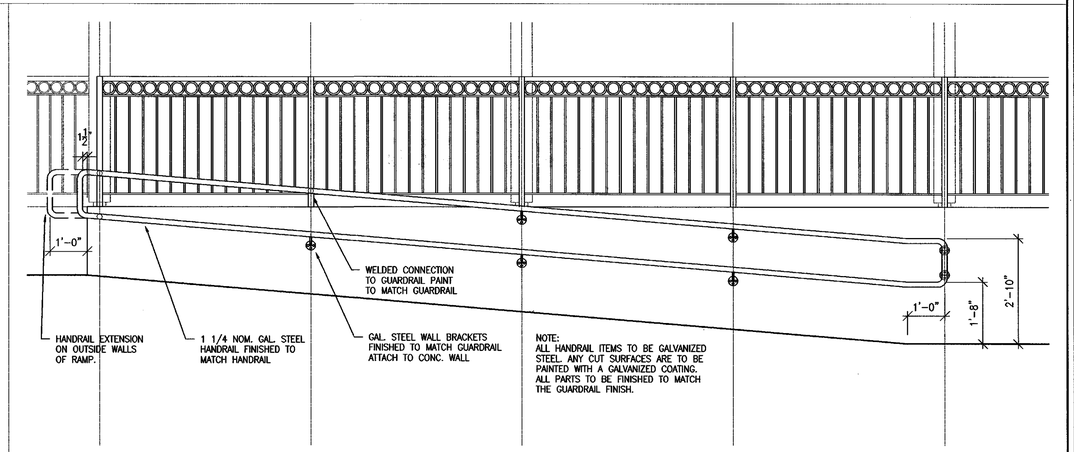

6 A3-1 RAMP HANDRAIL ELEVATION
1/2" = 1'-0"

As-Built Plans

Sherman Greiner Halle' Ltd.
ARCHITECTS • LANDSCAPE ARCHITECTS • PLANNERS
2 Capital Plaza, Concord, New Hampshire 03301 4911
(603) 225-0640 (FAX) 225-0621
Email: info@sghltd.com www.sghltd.com

10/16/2000
100% SUBMITTAL

REGISTERED ARCHITECT PATRICIA C. SHERMAN 3944 STATE OF NEW HAMPSHIRE

Vanasse Hangen Brustlin, Inc.

STATE OF NEW HAMPSHIRE

PASSENGER RAIL STATION – EXETER, N.H.

ELEVATIONS

REVISION DATE	DRAWING NAME	SHEET SCALE	FEDERAL PROJECT NO.	STATE PROJECT NO.	SHEET NO.	TOTAL SHEETS
		AS SHOWN		10025-A	A3-1	35 OF 43

22750s31.dwg 11900 51809

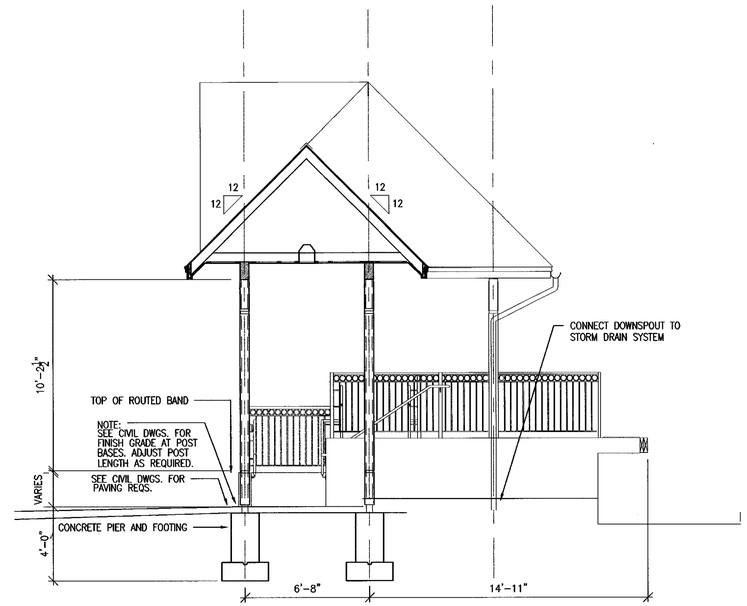

1 A1-1 BUILDING SECTION
1/4"=1'-0"

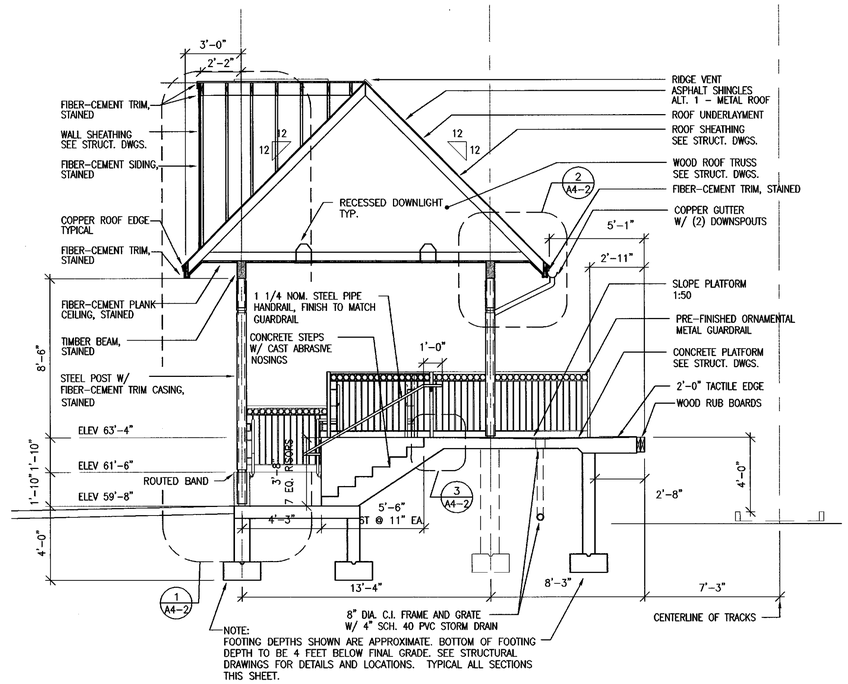

2 A1-1 BUILDING SECTION
1/4"=1'-0"

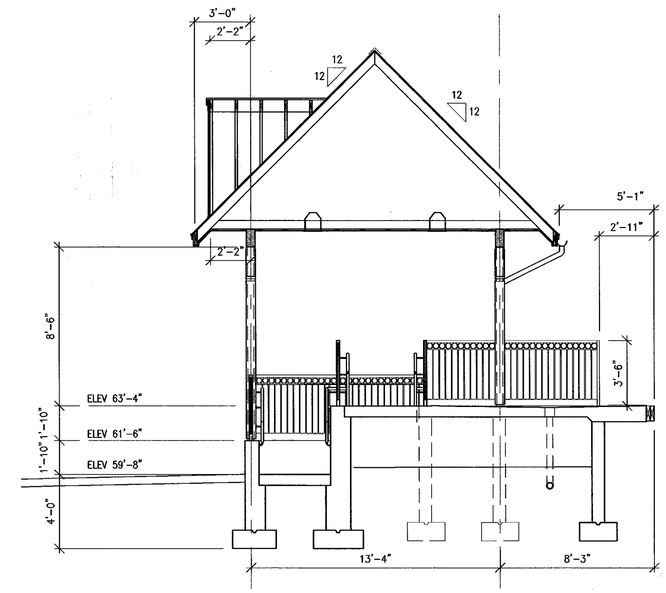

3 A1-1 BUILDING SECTION
1/4"=1'-0"

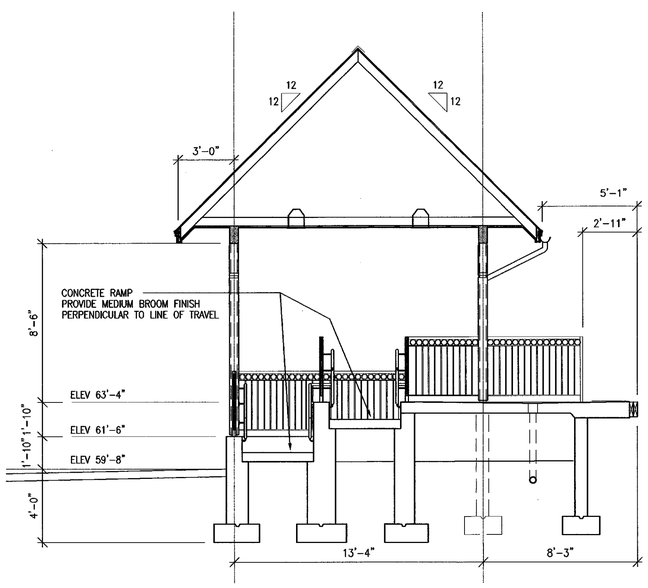

4 A1-1 BUILDING SECTION
1/4" = 1'-0"

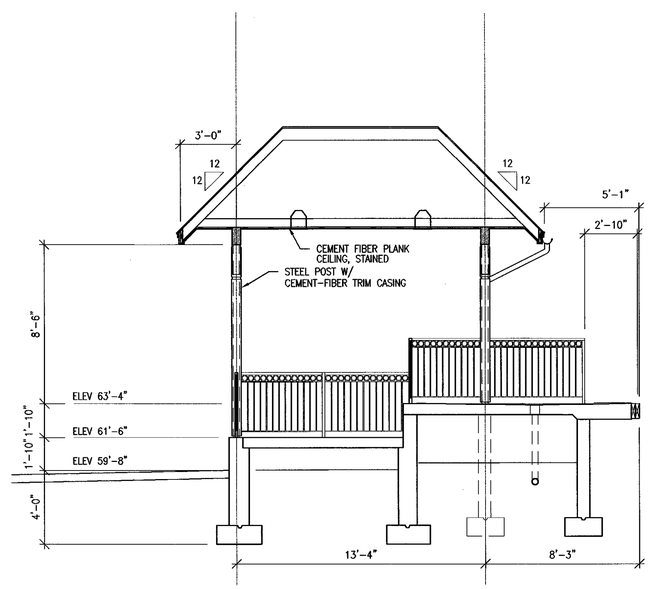

5 A1-1 BUILDING SECTION
1/4" = 1'-0"

6 A1-1 NOT USED
1/4"=1'-0"

Sherman Greiner Halle' Ltd.
ARCHITECTS · LANDSCAPE ARCHITECTS · PLANNERS
2 Capital Plaza, Concord, New Hampshire 03301 4911
(603) 225-0640 (FAX) 225-0621
Email: info@sghltd.com www.sghltd.com

10/16/2000
100% SUBMITTAL

REGISTERED ARCHITECT PATRICIA C. SHERMAN No. 3264 THE STATE OF NEW HAMPSHIRE

Vanasse Hangen Brustlin, Inc.

STATE OF NEW HAMPSHIRE
PASSENGER RAIL STATION – EXETER, N.H.

BUILDING SECTIONS

REVISION DATE	DRAWING NAME	SHEET SCALE	FEDERAL PROJECT NO.	STATE PROJECT NO.	SHEET NO.	TOTAL SHEETS
		AS SHOWN		10025-A	A1-1	

2275c41.dwg 111000 112304

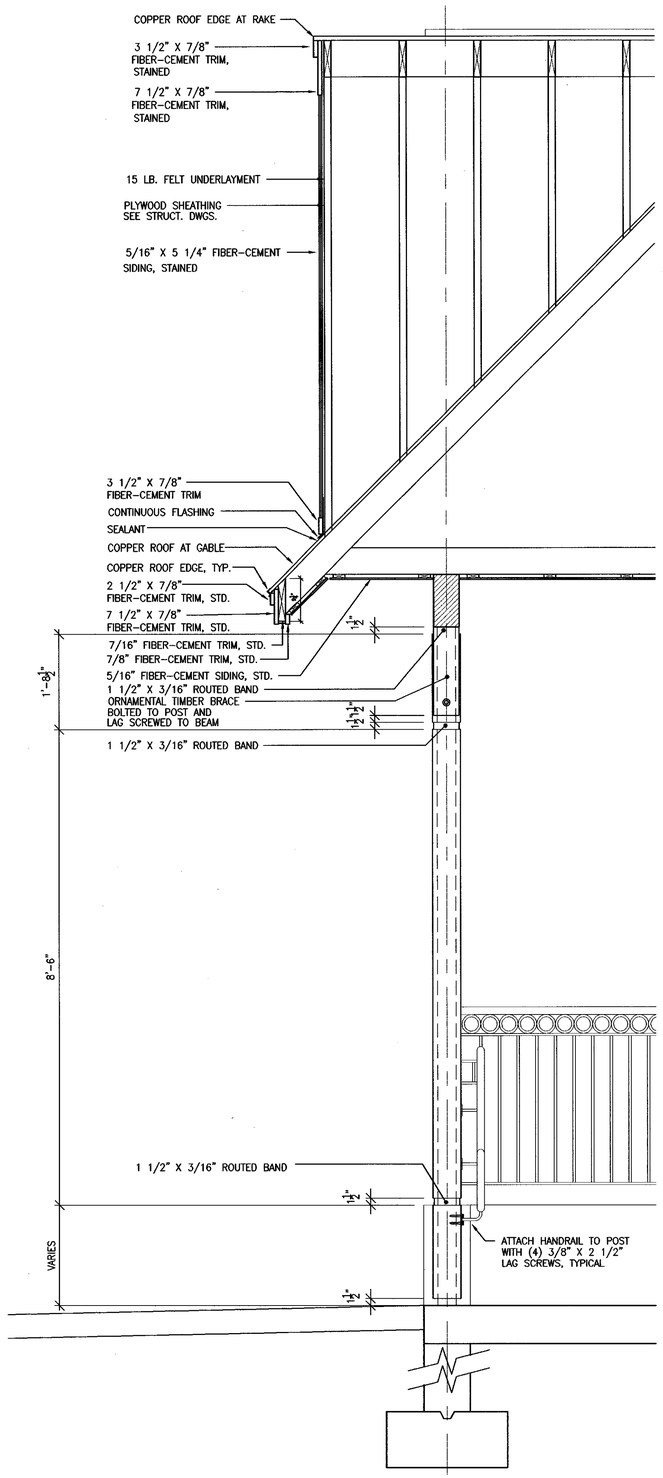

1 A4-2 WALL SECTION
3/4" = 1'-0"

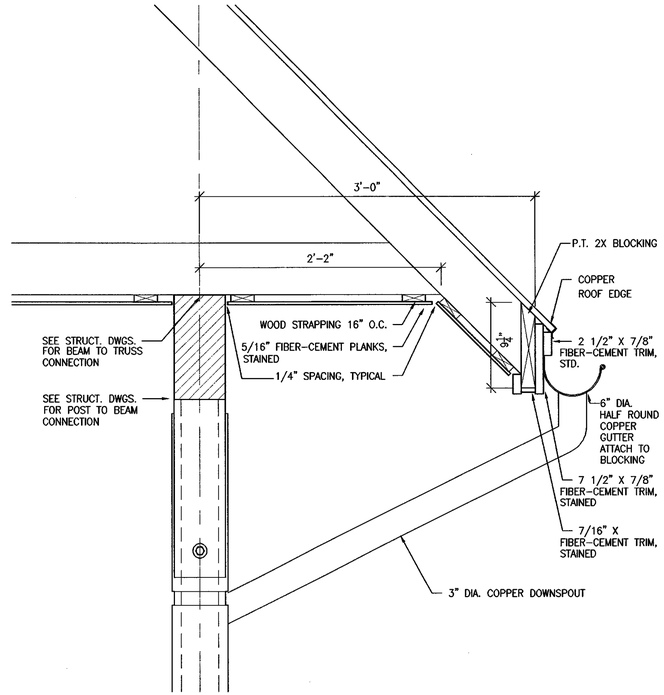

2 A4-2 EAVE SECTION
1 1/2" = 1'-0"

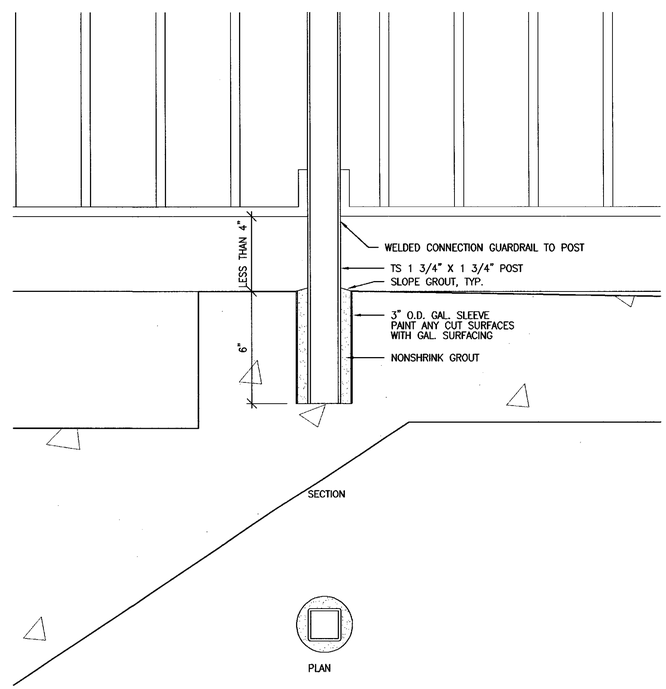

3 A4-2 GUARDRAIL POST SEC. DETAIL
3" = 1'-0"

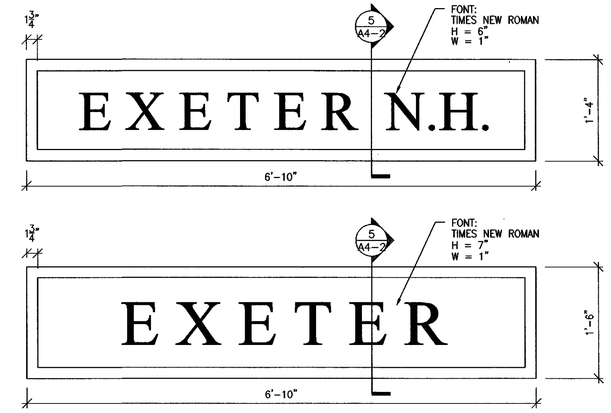

4 A4-2 SIGN ELEVATION DETAIL
1" = 1'-0"

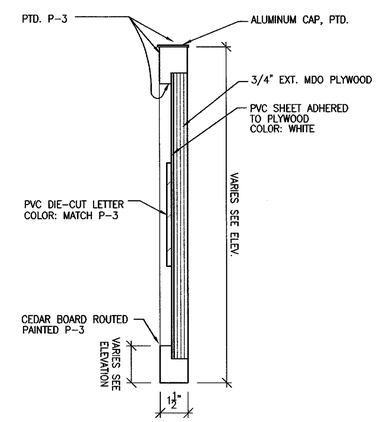

5 A4-2 SIGN SEC. DETAIL
3" = 1'-0"

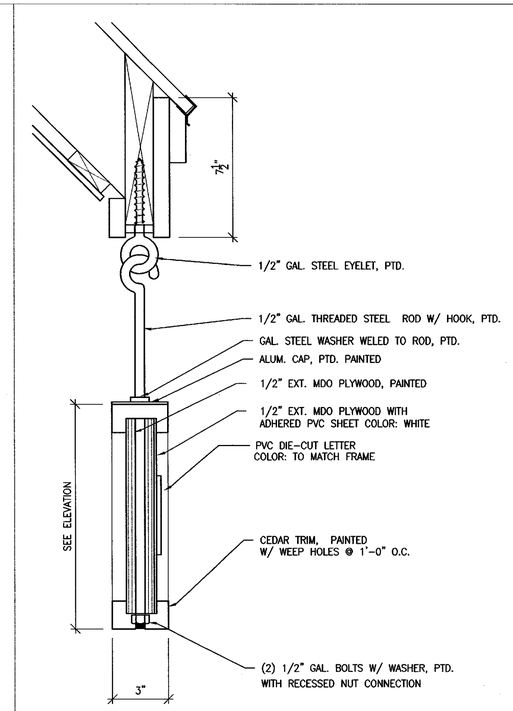

6 A4-2 SIGN SEC. DETAIL
3" = 1'-0"

Sherman Greiner Halle' Ltd.
ARCHITECTS • LANDSCAPE ARCHITECTS • PLANNERS
2 Capital Plaza, Concord, New Hampshire 03301 4911
(603) 225-0640 (FAX) 225-0621
Email: info@sghltd.com www.sghltd.com

10/16/2000
100% SUBMITTAL

REGISTERED ARCHITECT PATRICIA C. SHERMON No. 944 THE STATE OF NEW HAMPSHIRE

Vanasse Hangen Brustlin, Inc.

STATE OF NEW HAMPSHIRE

PASSENGER RAIL STATION – EXETER, N.H.

BUILDING SECTION AND MISC. DETAILS

REVISION DATE	DRAWING NAME	SHEET SCALE	FEDERAL PROJECT NO.	STATE PROJECT NO.	SHEET NO.	TOTAL SHEETS
		AS SHOWN		10025-A	M-2	37 OF 43

2275c41.dwg 81600 32534

GENERAL

1. ALL MATERIALS, WORKMANSHIP, AND DETAILS SHALL CONFORM TO THE LATEST EDITION OF THE BOCA BASIC BUILDING CODE AND THE REFERENCE STANDARDS INCLUDED THEREIN THAT ARE APPLICABLE TO THIS PROJECT.

2. THE CONTRACTOR SHALL FAMILIARIZE HIMSELF WITH THE CONTRACT DRAWINGS. ANY DISCREPANCIES SHALL BE BROUGHT TO THE ATTENTION OF THE PROJECT ENGINEER BEFORE PROCEEDING WITH THE AFFECTED WORK. ANY VARIATIONS OR SUBSTITUTIONS OF MATERIALS OR DETAILS FROM THOSE INDICATED ON THE DRAWINGS MAY ONLY BE MADE WITH PRIOR APPROVAL OF THE PROJECT ENGINEER. THE CONTRACTOR SHALL BE SOLELY RESPONSIBLE FOR ANY AND ALL CONSTRUCTION MEANS, METHODS, TECHNIQUES, SEQUENCES, PROCEDURES, SHORING AND SAFTIEY PROGRAMS REQUIRED TO COMPLETE THE WORK OF THIS CONTRACT.

3. ALL STRUCTURAL DRAWINGS SHALL BE USED IN CONJUNCTION WITH THE ARCHITECTURAL, MECHANICAL, PLUMBING AND ELECTRICAL DRAWINGS AND SPECIFICATIONS. VERIFY LOCATION AND DIMENSIONS OF CHASES, INSERTS, OPENINGS, SLEEVES, WASHES, DRIPS, REVEALS, DEPRESSIONS, AND OTHER PROJECT REQUIREMENTS NOT SHOWN ON THE STRUCTURAL DRAWINGS. VERIFY AND COORDINATE ALL DIMENSIONS RELATED TO THIS PROJECT.

4. SHOP DRAWINGS FOR STRUCTURAL STEEL, REINFORCING STEEL (INCLUDING ALL ACCESSORIES), AND PREFABRICATED WOOD TRUSSES SHALL BE SUBMITTED TO THE ENGINEER AND A STAMPED APPROVAL RECEIVED BEFORE FABRICATION CAN PROCEED. THE CONTRACTOR SHALL REVIEW AND STAMP ALL SHOP DRAWINGS PRIOR TO SUBMITTAL FOR ENGINEERING REVIEW. SUBMITTED SHOP DRAWINGS WHICH HAVE NOT BEEN REVIEWED AND APPROVED BY THE CONTRACTOR SHALL BE RETURNED UNCHECKED TO THE CONTRACTOR FOR THEIR REVIEW AND APPROVAL. FAILURE TO SUBMIT SHOP DRAWINGS FOR THE REQUIRED MATERIALS SHALL RELIEVE THE ENGINEER OF RESPONSIBILITY AND LIABILITY FOR THOSE PARTS OF THE STRUCTURE AND ANY OTHER PART AFFECTED BY THE UNSUBMITTED PARTS. STRUCTURAL DESIGN DRAWINGS MAY NOT BE USED AS THE ERECTION PLANS AND WILL BE IMMEDIATELY REJECTED AND RETURNED IF SO SUBMITTED.

5. UNLESS OTHERWISE INDICATED, DETAILS SHOWN ON ANY DRAWING ARE TO BE CONSIDERED TYPICAL FOR ALL SIMILAR CONDITIONS.

6. NO MAIN FRAMING OR STRUCTURAL MEMBERS ARE TO BE MODIFIED, ALTERED, OR CUT WITHOUT THE APPROVAL OF THE PROJECT ENGINEER.

7. THE CONTRACTOR SHALL BE RESPONSIBLE FOR ANY SHORING REQUIRED TO COMPLETE THE WORK OF THIS CONTRACT.

8. THESE DRAWINGS HAVE BEEN COMPILED FROM THE BEST AVAILABLE INFORMATION AND ARE NOT INTENDED TO LIMIT THE SCOPE OF THE WORK. THE CONTRACTOR MAY ENCOUNTER HIDDEN OR UNCOVERED CONDITIONS, NOT SHOWN ON THESE DRAWINGS, REQUIRING ADDITIONAL WORK FOR THE COMPLETION OF THIS CONTRACT. IT WILL BE ASSUMED THAT THE CONTRACTOR HAS INSPECTED THE SITE PRIOR TO BIDDING AND VERIFIED THE INFORMATION HEREIN SUPPLIED.

DESIGN LIVE LOADS

1. ROOFS- GROUND SNOW LOAD: 60 PSF (PLUS ALLOWACE FOR DRIFTING)
   FLAT ROOF SNOW LOAD: 42 PSF
   SNOW EXPOSURE FACTOR: 0.7
   IMPORTANCE FACTOR: 1.0

2. FLOORS: 100 PSF

3. WIND- BASIC WIND SPEED: 85 MPH, EXPOSURE C
   IMPORTANCE FACTOR: 1.09

FOUNDATIONS

1. FOUNDATIONS SHALL BEAR ON UNDISTURBED NATURAL MATERIAL HAVING AN ALLOWABLE BEARING PRESSURE OF 2,500 PSF.

2. CONTROLLED STRUCTURAL FILL SHALL CONSIST OF CLEAN GRANULAR MATERIAL FREE OF ORGANIC OR OTHER DELETERIOUS MATTER AND CONFORM TO A SIEVE ANALYSIS WHICH PRODUCES A GRAIN SIZE DISTRIBUTION CURVE FALLING ENTIRELY WITHIN THE FOLLOWING LIMITS, AS DETERMINED BY LABORATORY ANALYSIS:

SCREEN OR SIEVE SIZE	PERCENT PASSING BY WEIGHT
4"	100%
3"	90- 100%
NO. 4	35- 70%
NO. 40	5- 35%
NO. 200	0- 5%

   FILL MATERIAL SHOULD BE PLACED IN LIFTS NOT EXCEEDING 12" IN LOOSE DEPTH FOR MATERIAL TO BE COMPACTED BY HEAVY COMPACTION EQUIPMENT, AND NOT MORE THAN 8" IN LOOSE DEPTH FOR MATERIAL COMPACTED BY HAND OPERATED TAMPERS. PRIOR TO COMPACTION, EACH LAYER SHOULD BE MOISTENED OR AERATED AS NECESSARY TO PROVIDE OPTIMUM MOISTURE CONTENT. EACH LAYER SHOULD BE COMPACTED TO 95% OF OPTIMUM DRY DENSITY AS DETERMINED BY A LABORATORY PERFORMED MODIFIED PROCTOR DENSITY TEST, ASTM D- 1557. EACH LAYER OF COMPACTED STRUCTURAL FILL SHALL BE FIELD TESTED WITH A MINIMUM OF THREE (3) COMPACTION TESTS PER LAYER.

3. EXCAVATE TO LINES AND GRADES REQUIRED TO PROPERLY INSTALL THE FOUNDATIONS ON UNDISTURBED NATURAL SOIL. REMOVE ALL TOPSOIL AND ORGANIC MATERIAL FROM UNDER SLABS ON GRADE. ALL EXCAVATIONS SHALL BE DRY BEFORE PLACING ANY CONCRETE.

4. EXTERIOR WALL FOOTINGS ARE TO BE PLACED ON NATURAL SOIL AT A MINIMUM DEPTH OF 4'-0" BELOW THE LOWEST ADJACENT GROUND SURFACE EXPOSED TO FREEZING. ANY ADJUSTMENT OF ELEVATIONS OF FOOTINGS DUE TO FIELD CONDITIONS MUST HAVE THE EXPRESSED APPROVAL OF THE ENGINEER.

5. BACKFILLING AGAINST FOUNDATION WALLS SHALL BE DONE ONLY AFTER WALLS ARE BRACED TO PREVENT MOVEMENT.

6. BACKFILL INSIDE THE FOUNDATION WALLS WITH APPROVED GRANULAR MATERIAL PLACED IN 12- INCH LAYERS AND COMPACTED TO 95% DENSITY AT OPTIMUM MOISTURE CONTENT AS DEFINED BY ASTM D1557, METHOD D.

7. WHERE NEW FOUNDATIONS ARE BUILT IN THE SAME LOCATION AS REMOVED EXISTING FOUNDATIONS, THEY SHALL BEAR ON UNDISTURBED SOIL AT OR BELOW THE ELEVATION OF THE EXISTING FOUNDATIONS.

8. (XXX'-X") INDICATES BOTTOM OF FOOTING ELEVATION. (XX'-X") INDICATES TOP OF PIER ELEVATION.

CONCRETE

1. CONCRETE WORK SHALL CONFORM TO BUILDING CODE REQUIREMENTS FOR REINFORCED CONCRETE (ACI 318-97), SPECIFICATIONS FOR STRUCTURAL CONCRETE FOR BUILDINGS (ACI 301-89) AND STANDARD SPECIFICATIONS FOR COLD WEATHER CONCRETING (ACI 306R-88).

2. CONCRETE SHALL BE NORMAL WEIGHT, APPROVED, READY-MIXED CONCRETE HAVING AN ULTIMATE COMPRESSIVE STRENGTH OF 3,000 PSI AT 28 DAYS EXCEPT CONCRETE FOR EXTERIOR SLABS AND WALKWAYS SHALL HAVE AN ULTIMATE COMPRESSIVE STRENGTH OF 4,000 PSI AT 28 DAYS. SLUMP SHALL BE 2-4 INCHES.

3. CONCRETE WHICH WILL BE EXPOSED AND/ OR SUBJECT TO FREEZING AND THAWING SHALL BE AIR ENTRAINED WITH 4 - 6% AIR BY VOLUME.

4. ABSOLUTELY NO CALCIUM CHLORIDE MAY BE USED IN ANY CONCRETE.

5. REINFORCING SHALL BE DEFORMED BARS CONFORMING TO ASTM A615, GRADE 60. WELDED WIRE FABRIC SHALL CONFORM TO ASTM A185.

6. DETAILING, FABRICATION AND ERECTION OF REINFORCEMENT, UNLESS OTHERWISE NOTED, SHALL CONFORM TO ACI DETAILING MANUAL (SP-66) IN ADDITION TO THE ABOVE CODES AND SPECIFICATIONS.

7. PLACE CONCRETE BY APPROVED METHODS AF ACI 304R-89, RECOMMENDED PRACTICE FOR MEASURING, MIXING, TRANSPORTING AND PLACING CONCRETE. CONSOLIDATE CONCRETE BY MECHANICAL VIBRATION. DO NOT USE VIBRATORS FOR MOVING CONCRETE IN FORMS.

8. PLACE REINFORCING USING STANDARD BAR SUPPORTS TO PROVIDE PROPER CLEARANCE AND PREVENT DISPLACEMENT DURING CONCRETE OPERATIONS.

9. MINIMUM CONCRETE COVER FOR REINFORCEMENT SHALL BE AS FOLLOWS UNLESS NOTED OTHERWISE:
   - UNFORMED SURFACES IN CONTACT WITH GROUND OR EXPOSED TO WEATHER..... 3 INCHES
   - FORMED SURFACES IN CONTACT WITH GROUND OR EXPOSED TO WEATHER..... 2 INCHES
   - SLABS ON GRADE..... 1.1/2 INCHES

10. PROPERLY BRACE AND SHORE FORMWORK TO MAINTAIN ALIGNMENT AND TOLERANCES IN ACCORDANCE WITH ACI 347R-94.

11. LAP ALL WELDED WIRE FABRIC TWO SQUARES AT ENDS AND ONE SQUARE AT SIDES.

12. INSTALLATION OF REINFORCEMENT SHALL BE COMPLETED AT LEAST 24 HOURS PRIOR TO SCHEDULED CONCRETE PLACEMENT. NOTIFY ENGINEER OF COMPLETION AT LEAST 24 HOURS PRIOR TO SCHEDULED REINFORCEMENT PLACEMENT COMPLETION.

STRUCTURAL STEEL

1. ALL STRUCTURAL STEEL WORK SHALL CONFORM TO "SPECIFICATION FOR STRUCTURAL STEEL BUILDINGS- ALLOWABLE STRESS DESIGN AND PLASTIC DESIGN" - AISC, "CODE OF STANDARD PRACTICE FOR STEEL BUILDINGS AND BRIDGES" - AISC, AND "STRUCTURAL WELDING CODE- STEEL" - AWS D1.1.

2. STRUCTURAL STEEL SHAPES AND PLATES SHALL CONFORM TO ASTM A36.

3. HOLLOW STRUCTURAL SECTIONS SHALL CONFORM TO ASTM A500, GRADE B.

4. ANCHOR BOLTS AND STEEL TO WOOD CONNECTION BOLTS SHALL CONFORM TO ASTM A307. STEEL TO STEEL CONNECTION BOLTS SHALL CONFORM TO ASTM A325N. BOLTS SHALL BE 3/4" DIAMETER UNLESS NOTED OTHERWISE. CONNECTIONS SHALL BE DESIGNED AS SHEAR BEARING JOINTS UNLESS NOTED OTHERWISE.

5. WELDING ELECTRODES SHALL BE E70XX SERIES.

6. ALL STEEL SHALL BE HOT DIPPED GALVANIZED.

7. SHOP FABRICATE ALL MEMBERS AND CONNECTIONS TO MAXIMUM EXTENT POSSIBLE USING WELDING OR BOLTING. USE BOLTED FIELD CONNECTIONS UNLESS SPECIFICALLY NOTED OTHERWISE. ANY AND ALL SHOP AND FIELD WELDING SHALL BE PERFORMED BY AN AWS CERTIFIED WELDER, CERTIFIED FOR THE TYPE AND POSITION OF WELDS TO BE PERFORMED. SUBMIT TO THE PROJECT ENGINEER A COPY OF WELDER'S CERTIFICATION FOR ALL PERSONS PERFORMING OR MAKING FIELD WELDS.

8. ANCHOR BOLTS, LEVELING PLATES, OR BEARING PLATES SHALL BE LOCATED AND BUILT INTO CONNECTING WORK, PRESET BY TEMPLATES OR SIMILAR METHODS. PLATES SHALL BE SET IN FULL BEDS OF NON-SHRINK GROUT.

9. STRUCTURAL STEEL FRAMING SHALL BE TRUE AND PLUMB BEFORE CONNECTIONS ARE FINALLY BOLTED OR WELDED. PROVIDE TEMPORARY BRACING UNTIL FLOORS OR WALLS ARE IN PLACE.

WOOD

1. ALL STRUCTURAL LUMBER SHALL CONFORM TO THE LATEST EDITION OF THE N.F.P.A. "NATIONAL DESIGN SPECIFICATION FOR WOOD CONSTRUCTION" AND IT'S SUPPLEMENTS.

2. ALL STRESS GRADE LUMBER FOR FRAMING SHALL HAVE A MINIMUM ALLOWABLE BENDING STRESS, Fb, OF 875 PSI (SINGLE USE, NORMAL DURATION), A MINIMUM ALLOWABLE HORIZONTAL SHEAR STRESS, Fv, OF 70 PSI, AND A MINIMUM MODULUS OF ELASTICITY OF 1,400,000 PSI UNLESS OTHERWISE NOTED.

3. ALL PARALLEL STRAND LUMBER SHALL HAVE A MINIMUM ALLOWABLE BENDING STRESS, Fb, OF 2,900 PSI (SINGLE USE, NORMAL DURATION), A MINIMUM ALLOWABLE HORIZONTAL SHEAR STRESS, Fv, OF 285 PSI, AND A MINIMUM MODULUS OF ELASTICITY OF 2,000,000 PSI UNLESS OTHERWISE NOTED.

4. ALL STRESS GRADE LUMBER FOR 2 X 4 STUDS SHALL BE SPRUCE- PINE- FIR STUD GRADE OR BETTER. ALL STRESS GRADE LUMBER FOR 4 X 4 POSTS SHALL BE SPRUCE- PINE- FIR STANDARD GRADE OR BETTER. ALL STRESS GRADE LUMBER FOR 2 X 6 STUDS AND 4 X 6 POSTS SHALL BE SPRUCE- PINE- FIR #2 GRADE OR BETTER. ALL STRESS GRADE LUMBER FOR 6 X 6 POSTS SHALL BE SPRUCE-PINE- FIR #1 GRADE OR BETTER.

5. PLYWOOD FOR ROOFS SHALL BE APA RATED SHEATHING, 5/8" INCH THICKNESS, EXPOSURE 1, WITH A SPAN RATING OF 32/16. PLYWOOD FOR WALLS SHALL BE APA SHALL BE APA RATED SHEATHING, 1/2 INCH THICKNESS, EXPOSURE 1, WITH A SPAN RATING OF 24/16.

6. NO WOODEN BEAMS, JOISTS, OR STUDS SHALL BE CUT, NOTCHED OR BORED TO CLEAR PIPES, WIRE, CONDUIT, OR FOR OTHER PURPOSE WITHOUT THE APPROVAL OF THE PROJECT ENGINEER.

7. ALL SIZES, EXCEPT PARALLEL STRAND LUMBER SIZES, ARE NORMAL DIMENSIONS UNLESS OTHERWISE NOTED.

8. MEMBER SIZES ARE FOR ONE PIECE SOLID SECTIONS. BUILT UP MEMBERS ARE NOT ACCEPTABLE UNLESS OTHERWISE SHOWN.

9. LUMBER IN CONTACT WITH CONCRETE OR MASONRY SHALL BE PRESSURE TREATED.

10. PROVIDE GALVANIZED METAL HURRICANE TIE AT RAFTER AT WALL PLATES.

11. THE CONTRACTOR SHALL SUBMIT DETAILS FOR ALL BEAM AND JOIST HANGERS FOR APPROVAL, PRIOR TO INSTALLATION. GALVANIZED METAL CONNECTORS SHOWN ON THE DRAWINGS ARE BY SIMPSON STRONG-TIE CO. SUBSTITUTION OF ANOTHER MANUFACTURER MAY ONLY BE MADE FOLLOWING SUBMISSION OF CUT SHEETS FOR ALL SUBSTITUTIONS SHOWING LOAD CAPACITIES AND WRITTEN APPROVAL.

PREFABRICATED WOOD TRUSSES

1. ALL PREFABRICATED WOOD TRUSSES SHALL CONFORM TO TPI "DESIGN SPECIFICATIONS FOR LIGHT METAL PLATE CONNECTED WOOD TRUSSES".

2. ALL PREFABRICATED WOOD TRUSSES SHALL BE DESIGNED TO MEET OR EXCEED THE DESIGN LOADS SPECIFIED ON THE TRUSS LOADING DIAGRAMS SHOWN IN THE DRAWINGS. THE OUTLINE AND WEBS SHOWN IN THE LOADING DIAGRAMS ARE DIAGRAMATIC ONLY AND ARE NOT MEANT TO BE THE ACTUAL WEB LOCATIONS. FINAL MEMBER SIZING, LOCATIONS AND NUMBERS SHALL BE AS REQUIRED BY THE PREFABRICATED TRUSS DESIGNER UNLESS OTHERWISE SPECIFIED IN THE DRAWINGS. IF BEARING AREAS PROVIDED ARE LESS THAN THAT REQUIRED BY DESIGN, THE TRUSS DESIGNER SHALL SIZE AND PROVIDE ADDITIONAL STRUCTURE ON THE TRUSSES TO YIELD ACTUAL BEARING STRESSES WITHIN ALLOWABLE STRESSES.

3. ANCHOR THE ENDS OF EVERY TRUSS WITH APPROVED GALVANIZED METAL (HURRICANE) TIE DOWN STRAPS, H1 BY SIMPSON STRONG-TIE COMPANY OR APPROVED EQUAL UNLESS NOTED OTHERWISE.

4. PREFABRICATED WOOD TRUSSES SHOP DRAWINGS AND CALCULATIONS, STAMPED BY A PROFESSIONAL ENGINEER REGISTERED IN NEW HAMPSHIRE, MUST HAVE A STAMPED APPROVAL BY THE ENGINEER BEFORE FABRICATION CAN PROCEED.

5. TRUSS MANUFACTURER/ SUPPLIER SHALL PROVIDE THE CONTRACTOR WITH DRAWINGS INDICATING REQUIRED LOCATIONS FOR PERMANENT LATERAL BRACING AS WELL AS RECOMMENDED ERECTION BRACING.

6. PREFABRICATED WOOD TRUSSES SHALL NOT HAVE ANY HOLES BORED OR NOTCHES CUT IN ANY OF THE TRUSS MEMBERS. ALL TRUSSES WITH HOLES BORED OR NOTCHES CUT SHALL BE REMOVED AND REPLACED AT THE CONTRACTOR'S EXPENSE.

7. PERMANENT 2 X 6 DIAGONAL BRACING SHALL BE INSTALLED BETWEEN ROOF TRUSSES IN THE PLANE OF THE WEB MEMBERS AT EACH END OF THE TRUSS LAYOUT. THE DIAGONAL BRACING SHALL EXTEND OVER NOT LESS THAN 4 TRUSSES, STARTING FROM THE END TRUSS. DIAGONAL BRACING SHALL BE INSTALLED AT NO LESS THAN 2 WEB MEMBERS FOR TRUSSES 30 FT. OR LESS IN LENGTH. ADD ONE LINE OF DIAGONAL BRACES FOR EACH 10 FT. OF TRUSS LENGTH OVER 30 FT. DIAGONAL BRACING SHOULD BE INSTALLED ON THE FIRST DAY OF TRUSS ERECTION.

8. WHERE CEILING AND STRAPPING ARE NOT ATTACHED DIRECTLY TO THE TRUSS BOTTOM CHORDS, PROVIDE CONTINUOUS 2 X 6 HORIZONTAL BRACING ON TOP OF THE BOTTOM CHORDS AT 10'-0" O.C. MAXIMUM. SET BRACING PERPENDICULAR TO BOTTOM CHORDS.

MINIMUM REINFORCING BAR SPLICE LENGTH

BAR SIZE		#4 BAR	#5 BAR
SPLICE LENGTH	TOP BARS	2'-0"	2'-6"
	OTHER BARS	1'-3"	1'-9"

ABBREVIATIONS

A.B.	ANCHOR BOLT
ARCH.	ARCHITECTURAL
B.E.W.	BOTTOM EACH WAY
BETW.	BETWEEN
BM.	BEAM
BOT.	BOTTOM
BP	BEARING PLATE
BRG	BEARING
C-C	CENTER TO CENTER
COL.	COLUMN
CONC	CONCRETE
CONT.	CONTINUOUS
CTL.	CONTROL
CTRD.	CENTERED
DTL.	DETAIL
DIMEN.	DIMENSION
DWGS.	DRAWINGS
DWLS.	DOWELS
E.F.	EACH FACE
E.W.	EACH WAY
EA.	EACH
ELEV.	ELEVATION
EMBED.	EMBEDMENT
FLR.	FLOOR
FND.	FOUNDATION
FTG	FOOTING
GA	GAGE
GALV	GALVANIZED
HORIZ	HORIZONTAL
J.H.	JOIST HANGER
JSTS.	JOISTS
JT	JOINT
MIN.	MINIMUM
N.T.S.	NOT TO SCALE
O.F.	OUTSIDE FACE
O.H.	OPPOSITE HAND
O/C	ON CENTER
PL	PLATE
PLF	POUNDS PER LINEAL FOOT
PSF	POUNDS PER SQUARE FOOT
P.T.	PRESSURE TREATED
REINF	REINFORCING
REQ'D	REQUIRED
S.O.G.	SLAB ON GRADE
SECT.	SECTION
SHT	SHEET
SIM	SIMILAR
STD	STANDARD
STL.	STEEL
STRUCT	STRUCTURE
T. & B.	TOP AND BOTTOM
T.O.	TOP OF
T.O.S.	TOP OF SLAB
T.O.W.	TOP OF WALL
TYP	TYPICAL
U.N.O.	UNLESS NOTED OTHERWISE
V.I.F.	VERIFY IN FIELD
VERT	VERTICAL
W/	WITH
WWF	WELDED WIRE FABRIC

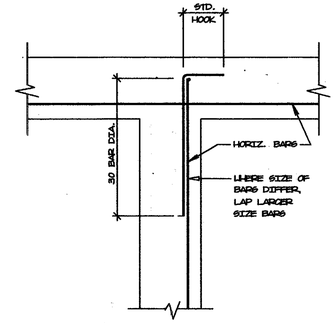

PLAN VIEW

WALL INTERSECTION
FNDN. WALL HORIZ. REINF.

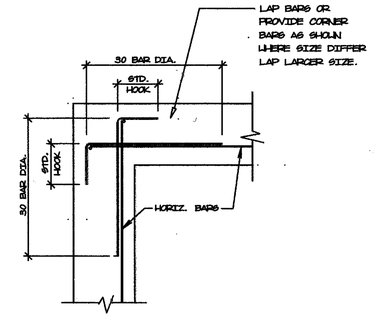

PLAN VIEW

WALL CORNER REINFORCING
FNDN. WALL HORIZ. REINF.

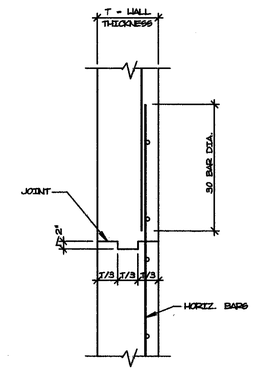

PLAN DETAIL- FOUNDATION
WALL CONSTRUCTION JOINT

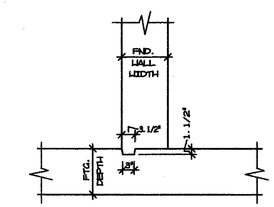

SECTION DETAIL- FOUNDATION
WALL/ FOOTING SHEAR KEY

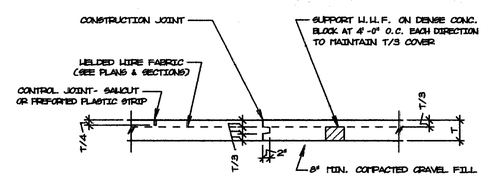

SLAB ON GRADE DETAIL

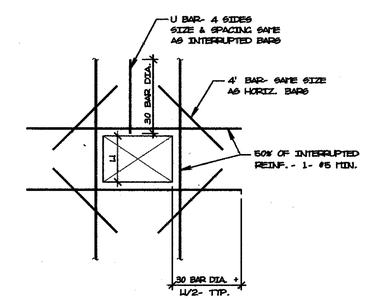

ELEVATION DETAIL OF CONCRETE
WALL OPENING

STATE OF NEW HAMPSHIRE
BENJAMIN E. TIREY
No. 5810
LICENSED
PROFESSIONAL ENGINEER

Benjamin E. Tirey, P.E.
STRUCTURAL ENGINEERING CONSULTANT
P.O. BOX 174
TEMPLE, NEW HAMPSHIRE 03084
PHONE/FAX 603-878-2743

Sherman Greiner Halle' Ltd.
ARCHITECTS LANDSCAPE ARCHITECTS PLANNERS
2 Capitol Plaza, Concord, New Hampshire 03301 4911
(603) 225-8540 (FAX) 225-8521
Email: info@sghltd.com www.sghltd.com

10/16/2000
100% SUBMITTAL

VHB Vanasse Hangen Brustlin, Inc.

STATE OF NEW HAMPSHIRE
PASSENGER RAIL STATION - PLATFORM EXETER, N.H.

GENERAL NOTES & ABBREVIATIONS

REVISION DATE	DRAWING NAME	SHEET SCALE	FEDERAL PROJECT NO.	STATE PROJECT NO.	SHEET NO.	TOTAL SHEETS
		AS SHOWN		10025-A	S-1	38 OF 43

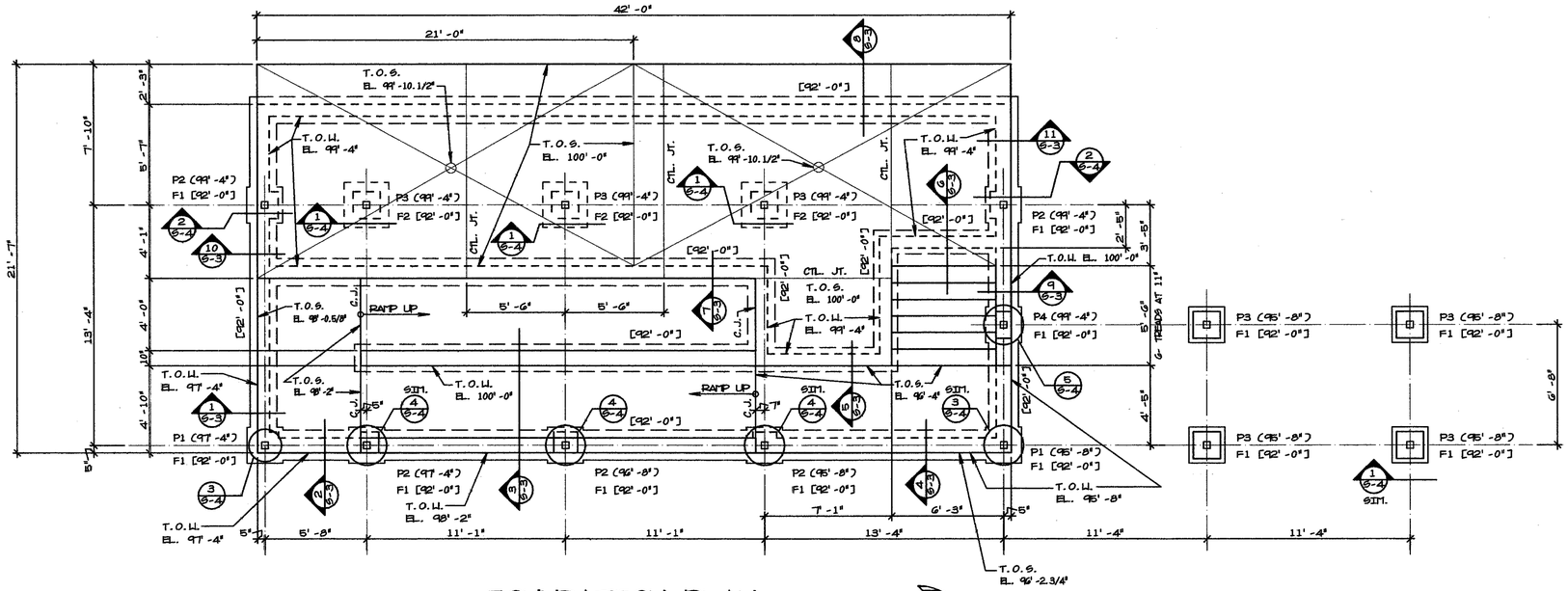

FOUNDATION PLAN

SCALE 1/4" = 1' -0"

NOTES:

1. [XX' -X"] INDICATES BOTTOM OF FOOTING ELEVATION.
2. (XX' -X") INDICATES TOP OF PIER ELEVATION.

PROJECT NORTH

FOOTING SCHEDULE		
MARK	SIZE	REINFORCING
F1	2' -0" X 2' -0" X 12"	3 - #4 EACH WAY BOTTOM
F2	2' -6" X 2' -6" X 12"	4 - #4 EACH WAY BOTTOM

PIER SCHEDULE			
MARK	SIZE	REINFORCING	
P1	14" X 14"	4- #5 VERT. & #4 TIES AT 12" O.C.	9 1/2" / 9 1/2"
P2	14" X 16"	4- #5 VERT. & #4 TIES AT 12" O.C.	1' -0" / 9 1/2"
P3	18" X 18"	4- #5 VERT. & #4 TIES AT 12" O.C.	1' -2" / 1' -2"
P4	10" X 16"	4- #4 VERT. & #4 TIES AT 12" O.C.	5" / 1' -0"

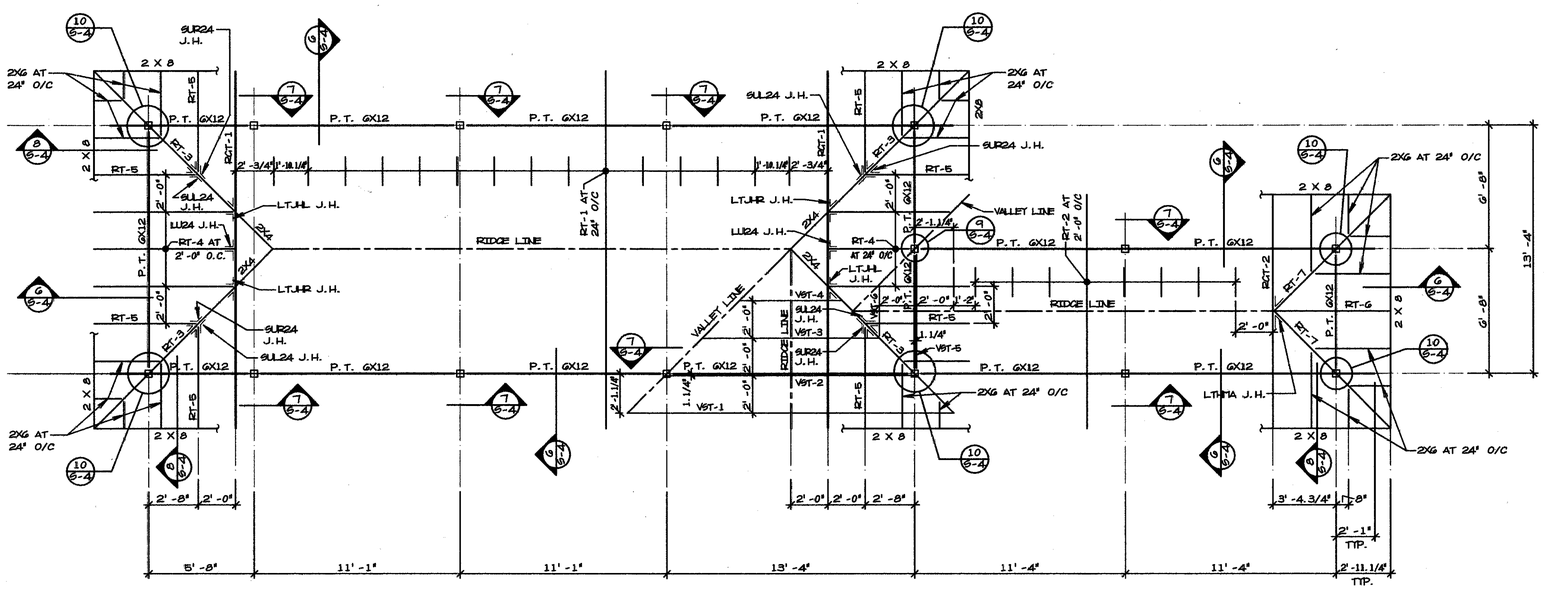

ROOF FRAMING PLAN

SCALE 1/4" = 1' -0"

NOTES:

1. HOT DIP GALVANIZE STEEL COLUMNS AFTER FABRICATION.

PROJECT NORTH

THE STATE OF NEW HAMPSHIRE
BENJAMIN E. TIREY
No. 5810
LICENSED
PROFESSIONAL ENGINEER

Benjamin E. Tirey, P.E.
STRUCTURAL ENGINEERING CONSULTANT
P.O. BOX 174
TEMPLE, NEW HAMPSHIRE 03084
PHONE/FAX 603-878-2743

Sherman Greiner Halle' Ltd.
ARCHITECTS LANDSCAPE ARCHITECTS PLANNERS
2 Capital Plaza, Concord, New Hampshire 03301 4911
(603) 225-8648 (FAX) 225-8521
Email: info@sghltd.com www.sghltd.com

10/16/2000
100% SUBMITTAL

VHB Vanasse Hangen Brustlin, Inc.

STATE OF NEW HAMPSHIRE
PASSENGER RAIL STATION - PLATFORM EXETER, N.H.

FOUNDATION & ROOF FRAMING PLAN

REVISION DATE	DRAWING NAME	SHEET SCALE	FEDERAL PROJECT NO.	STATE PROJECT NO.	SHEET NO.	TOTAL SHEETS
		AS SHOWN		10025-A	S-2	39 OF 43

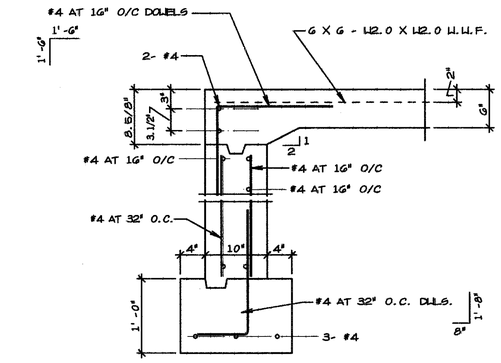

SECTION 1
SCALE 1" = 1'-0"

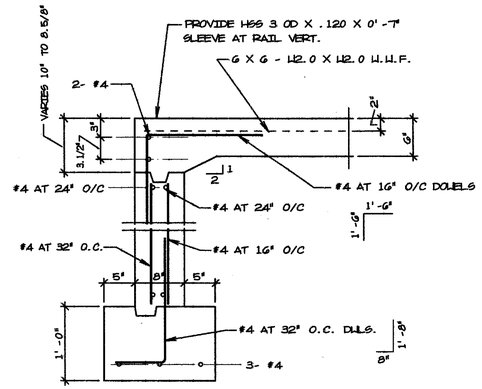

SECTION 2
SCALE 1" = 1'-0"

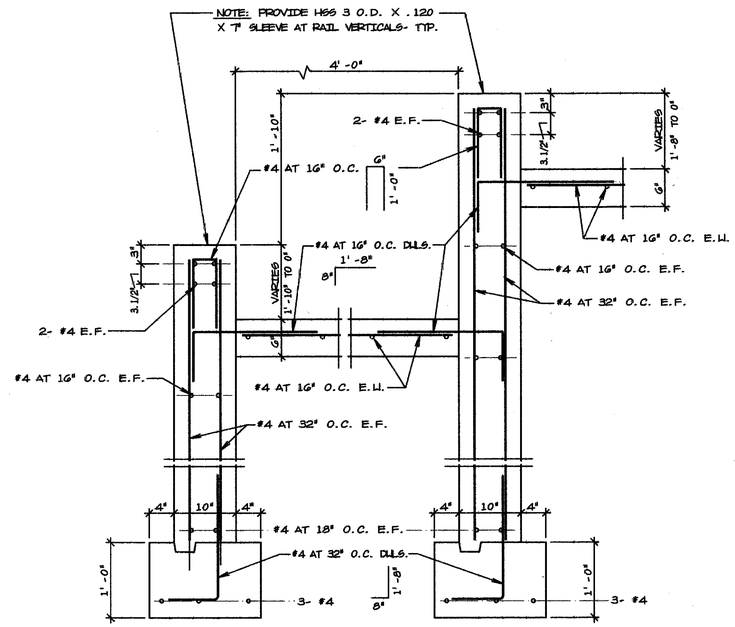

SECTION 3
SCALE 1" = 1'-0"

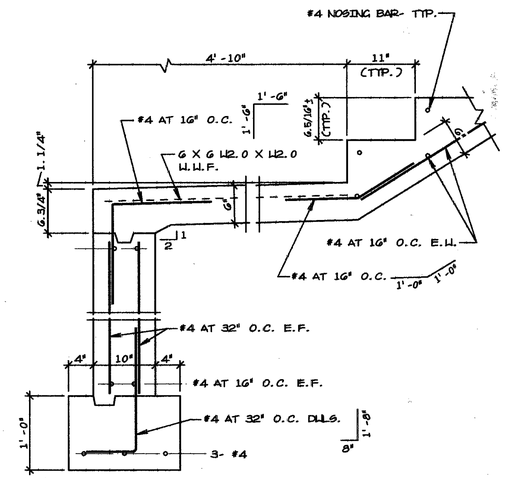

SECTION 4
SCALE 1" = 1'-0"

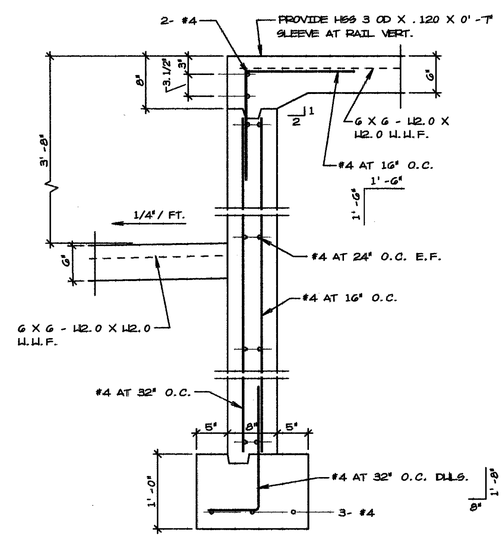

SECTION 5
SCALE 1" = 1'-0"

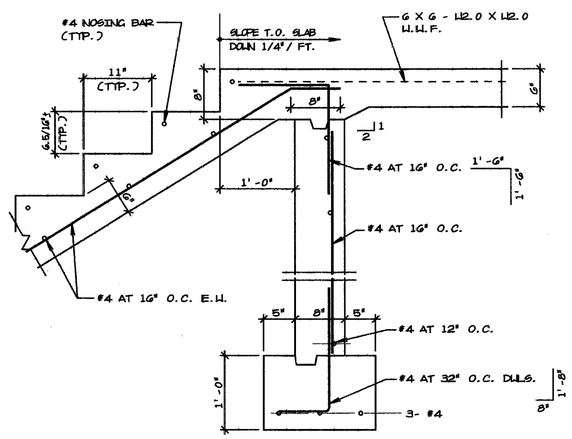

SECTION 6
SCALE 1" = 1'-0"

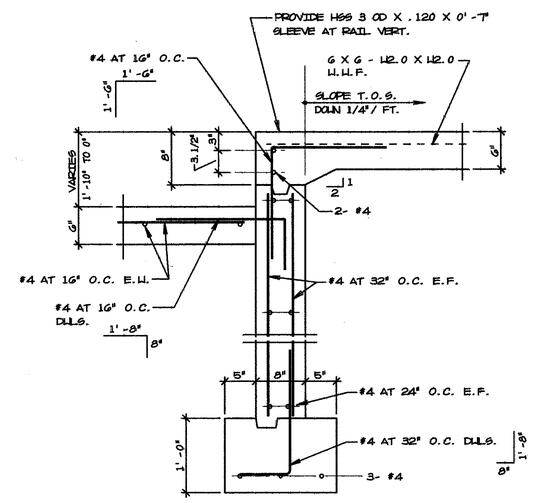

SECTION 7
SCALE 1" = 1'-0"

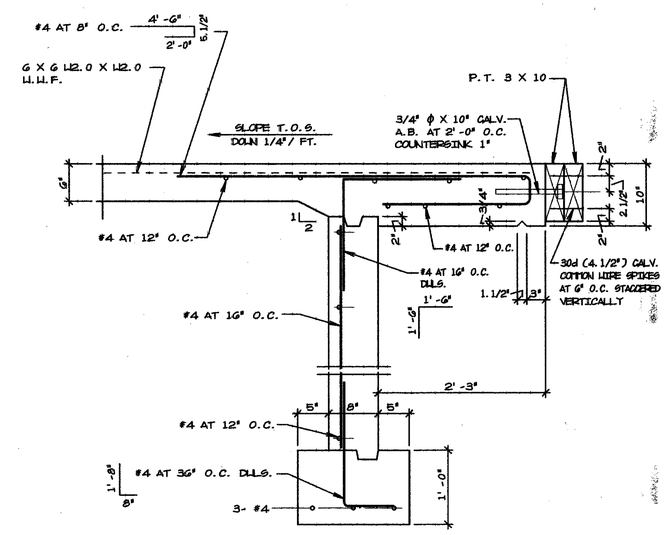

SECTION 8
SCALE 1" = 1'-0"

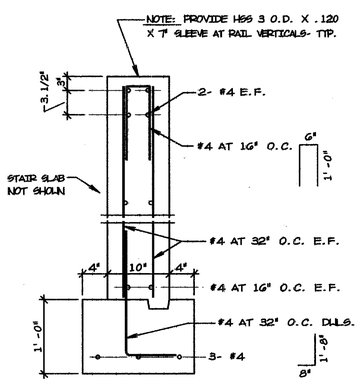

SECTION 9
SCALE 1" = 1'-0"

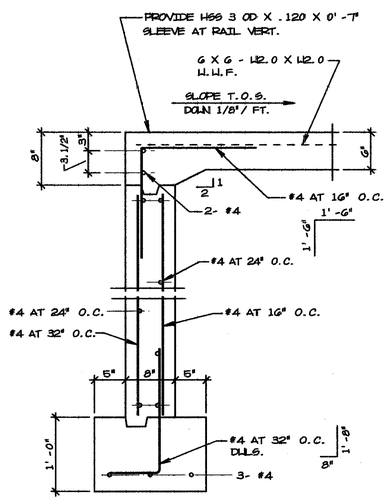

SECTION 10
SCALE 1" = 1'-0"

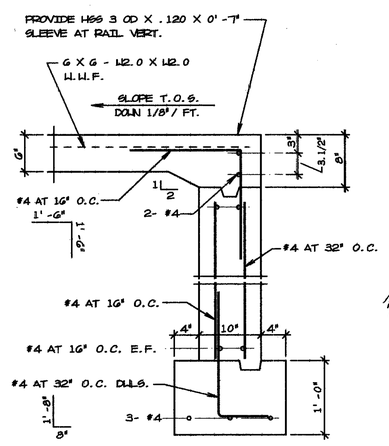

SECTION 11
SCALE 1" = 1'-0"

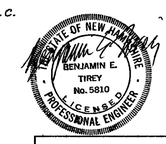

Benjamin E. Tirey, P.E.
STRUCTURAL ENGINEERING CONSULTANT
P.O. BOX 174
TEMPLE, NEW HAMPSHIRE 03084
PHONE/FAX 603-878-2743

Sherman Greiner Halle' Ltd.
ARCHITECTS LANDSCAPE ARCHITECTS PLANNERS
2 Capital Plaza, Concord, New Hampshire 03301 4911
(603) 225-8640 (FAX) 225-8621
Email: info@sghltd.com www.sghltd.com

10/16/2000
100% SUBMITTAL

VHB Vanasse Hangen Brustlin, Inc.

STATE OF NEW HAMPSHIRE
PASSENGER RAIL STATION - PLATFORM EXETER, N.H.

STRUCTURAL SECTIONS

REVISION DATE	DRAWING NAME	SHEET SCALE	FEDERAL PROJECT NO.	STATE PROJECT NO.	SHEET NO.	TOTAL SHEETS
		AS SHOWN		10025-A	S-3	40 OF 43

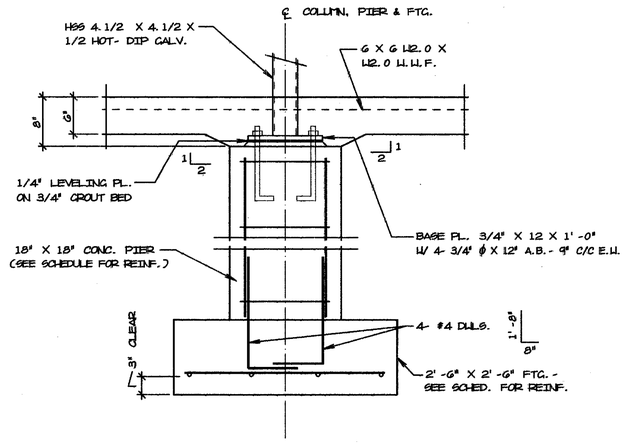

SECTION 1

SCALE 1" = 1'-0"

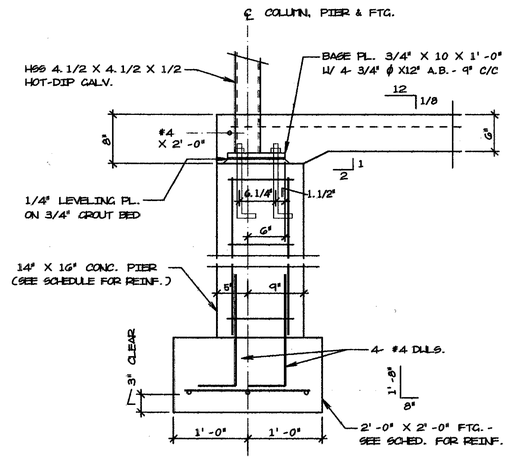

SECTION 2

SCALE 1" = 1'-0"

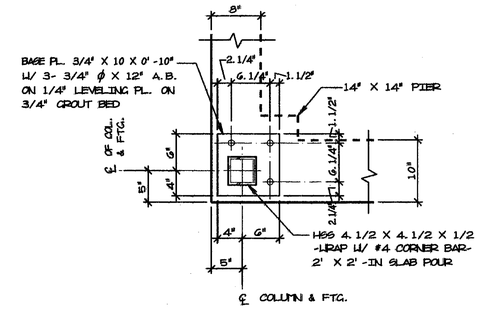

PLAN DETAIL 3

SCALE 1" = 1'-0"

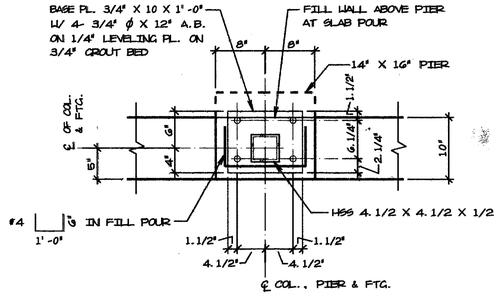

PLAN DETAIL 4

SCALE 1" = 1'-0"

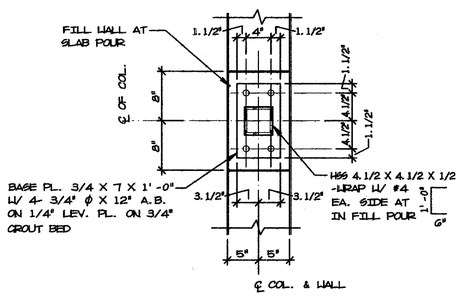

PLAN DETAIL 5

SCALE 1" = 1'-0"

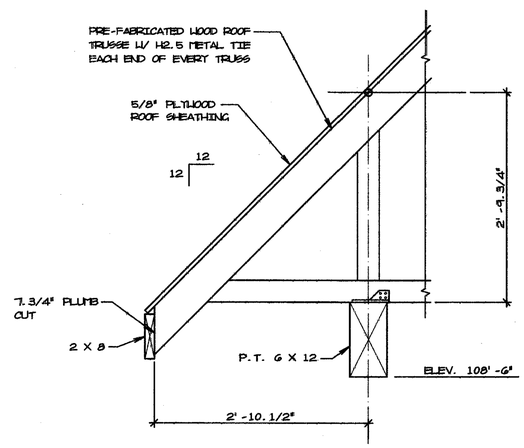

SECTION 6

SCALE 1" = 1'-0"

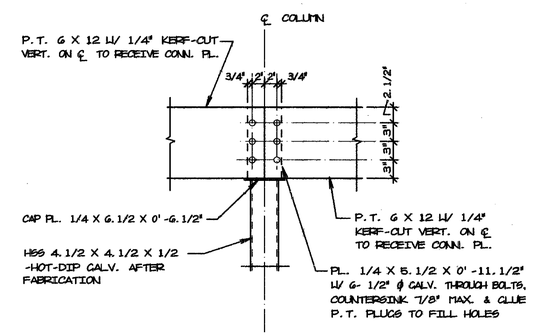

SECTION 7

SCALE 1" = 1'-0"

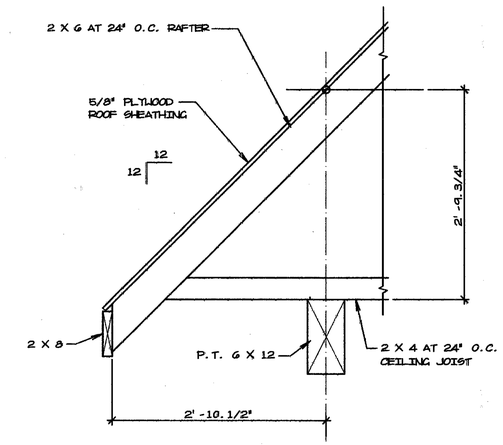

SECTION 8

SCALE 1" = 1'-0"

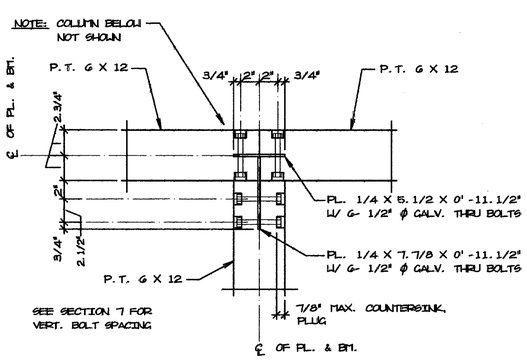

PLAN DETAIL 9

SCALE 1.1/2" = 1'-0"

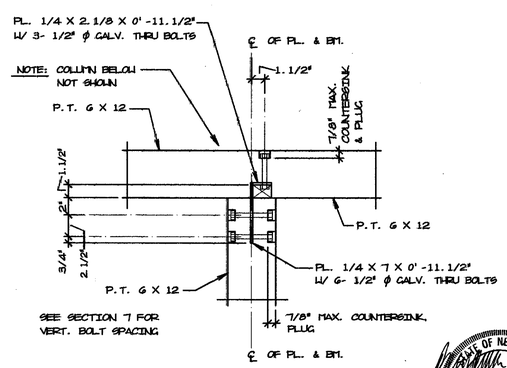

PLAN DETAIL 10

SCALE 1.1/2" = 1'-0"

Benjamin E. Tirey, P.E.
STRUCTURAL ENGINEERING CONSULTANT
P.O. BOX 174
TEMPLE, NEW HAMPSHIRE 03084
PHONE/FAX 603-878-2743

Sherman Greiner Halle' Ltd.
ARCHITECTS LANDSCAPE ARCHITECTS PLANNERS
2 Capitol Plaza, Concord, New Hampshire 03301 4911
(603) 225-8540 (FAX) 225-8621
Email: info@sghltd.com www.sghltd.com

VHB Vanasse Hangen Brustlin, Inc.

10/16/2000
100% SUBMITTAL

STATE OF NEW HAMPSHIRE

PASSENGER RAIL STATION - PLATFORM EXETER, N.H.

STRUCTURAL SECTIONS & DETAILS

REVISION DATE	DRAWING NAME	SHEET SCALE	FEDERAL PROJECT NO.	STATE PROJECT NO.	SHEET NO.	TOTAL SHEETS
		AS SHOWN		10025-A	S-4	41 OF 43

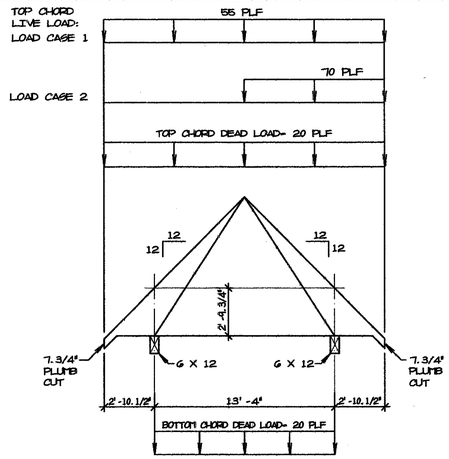

ROOF TRUSS LOADING DIAGRAM RT-1

NO SCALE

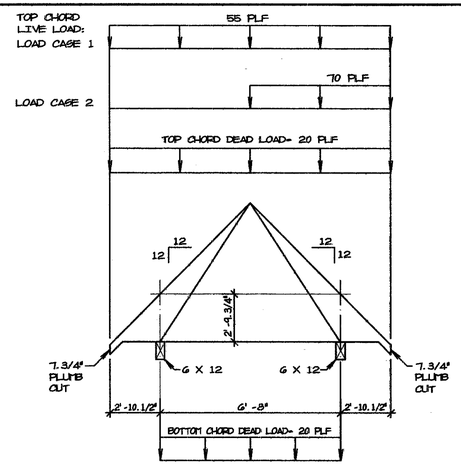

ROOF TRUSS LOADING DIAGRAM RT-2

NO SCALE

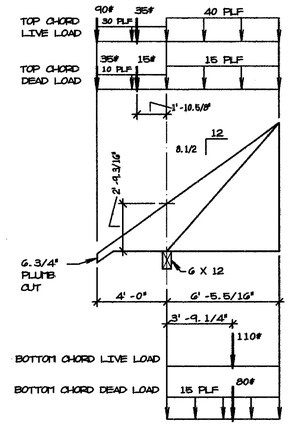

ROOF TRUSS LOADING DIAGRAM RT-3

NO SCALE

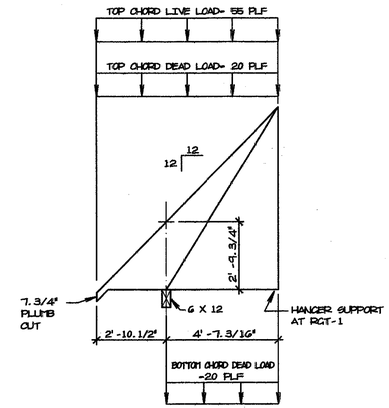

ROOF TRUSS LOADING DIAGRAM RT-4

NO SCALE

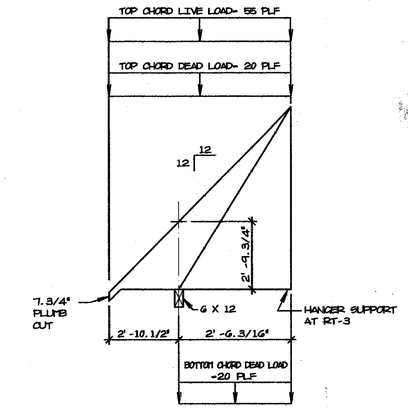

ROOF TRUSS LOADING DIAGRAM RT-5

NO SCALE

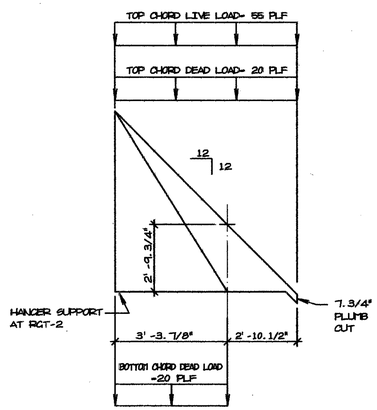

ROOF TRUSS LOADING DIAGRAM RT-6

NO SCALE

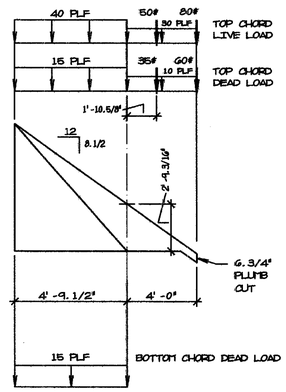

ROOF TRUSS LOADING DIAGRAM RT-7

NO SCALE

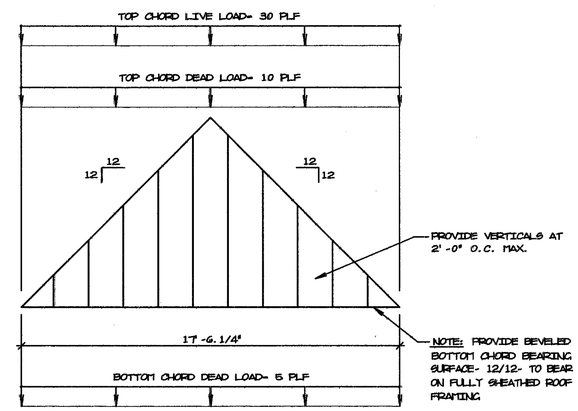

ROOF TRUSS LOADING DIAGRAM VST-1

NO SCALE

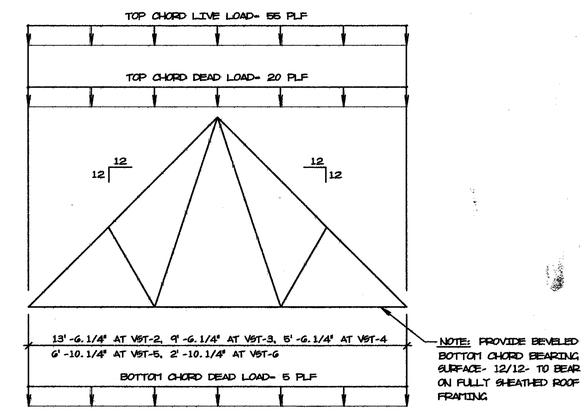

ROOF TRUSS LOADING DIAGRAM VST-2 TO VST-6

NO SCALE

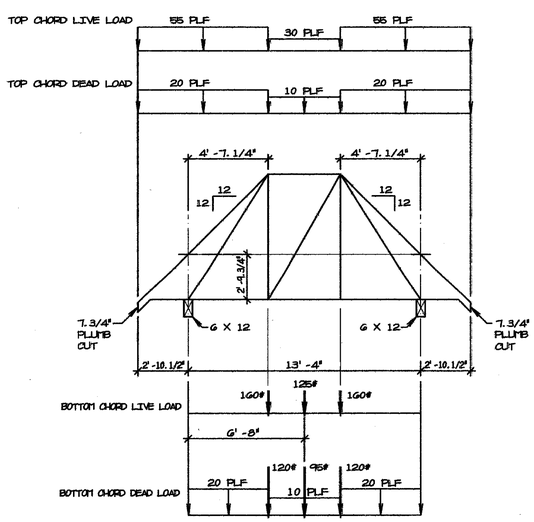

ROOF TRUSS LOADING DIAGRAM RGT-1

NO SCALE

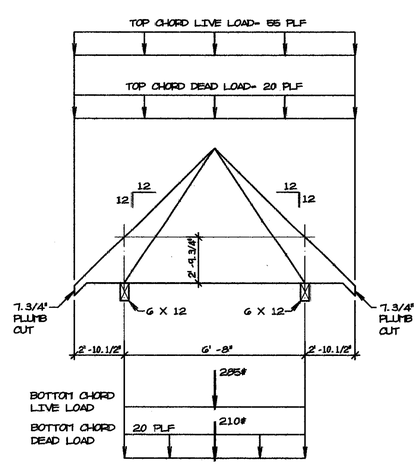

ROOF TRUSS LOADING DIAGRAM RGT-2

NO SCALE

THE STATE OF NEW HAMPSHIRE
BENJAMIN E. TIREY
No. 5810
LICENSED
PROFESSIONAL ENGINEER

Benjamin E. Tirey, P.E.
STRUCTURAL ENGINEERING CONSULTANT
P.O. BOX 174
TEMPLE, NEW HAMPSHIRE 03084
PHONE/FAX 603-878-2743

Sherman Greiner Halle' Ltd.
ARCHITECTS LANDSCAPE ARCHITECTS PLANNERS
2 Capitol Plaza, Concord, New Hampshire 03301 4911
(603) 225-8640 (FAX) 225-8621
Email: info@sghltd.com www.sghltd.com

10/16/2000
100% SUBMITTAL

VHB Vanasse Hangen Brustlin, Inc.

STATE OF NEW HAMPSHIRE

PASSENGER RAIL STATION - PLATFORM EXETER, N.H.

ROOF TRUSS LOADING DIAGRAMS

REVISION DATE	DRAWING NAME	SHEET SCALE	FEDERAL PROJECT NO.	STATE PROJECT NO.	SHEET NO.	TOTAL SHEETS
		AS SHOWN		10025-A	S-5	42 OF 43

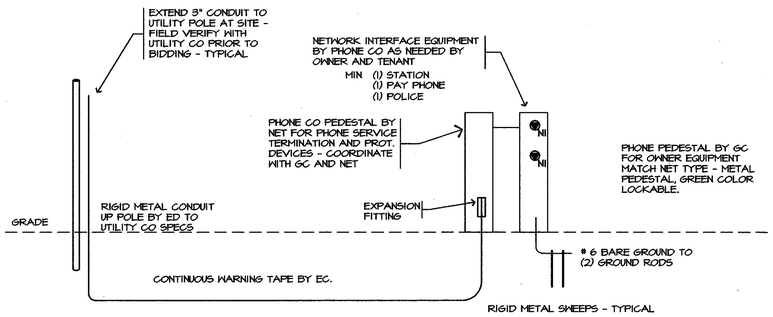

TELEPHONE SERVICE RISER DIAGRAM

SCALE: 1/4" = 1'-0"

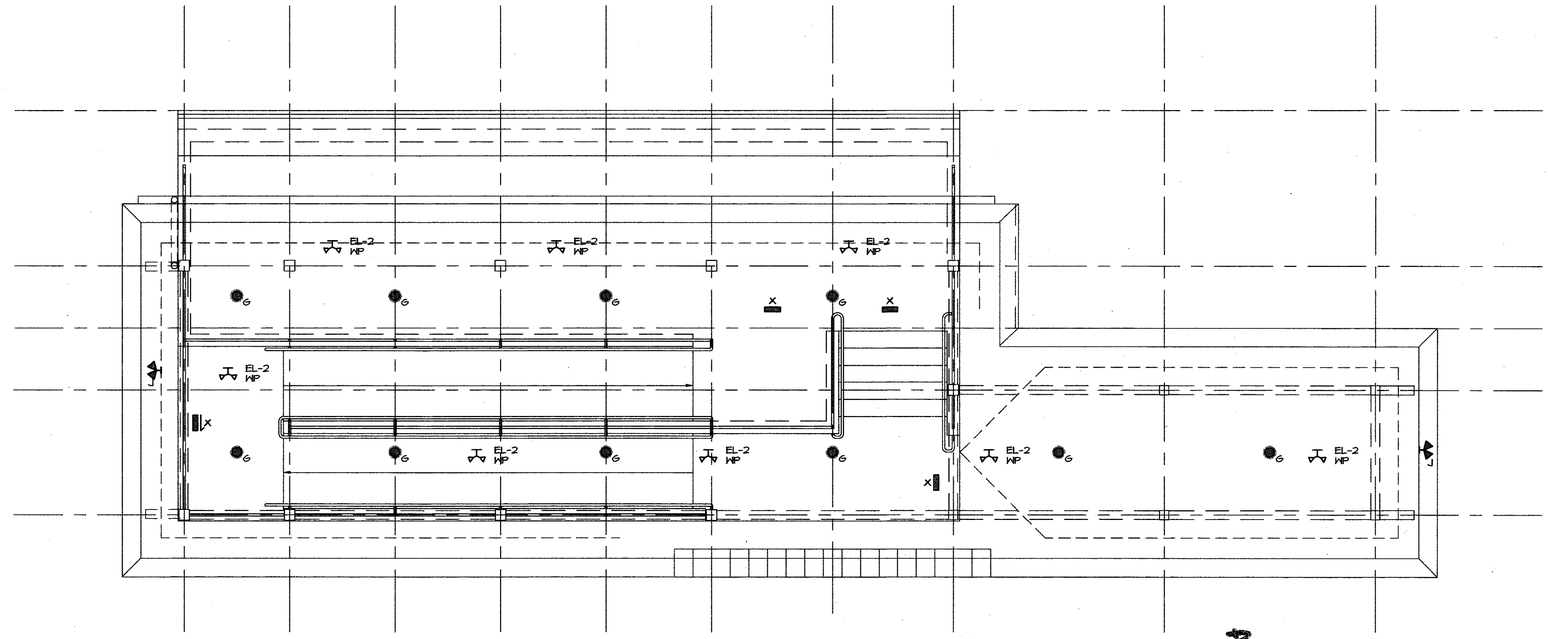

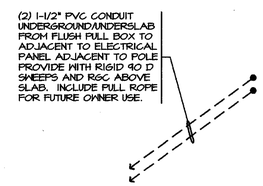

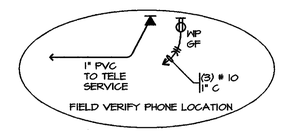

ELECTRICAL / LIGHTING FLOOR PLAN

SCALE: 1/4" = 1'-0"

SEE SITE PLANS FOR CONTINUATION

WATER - X SCE
WATER - X 100SE-4
EXETER BOX 811

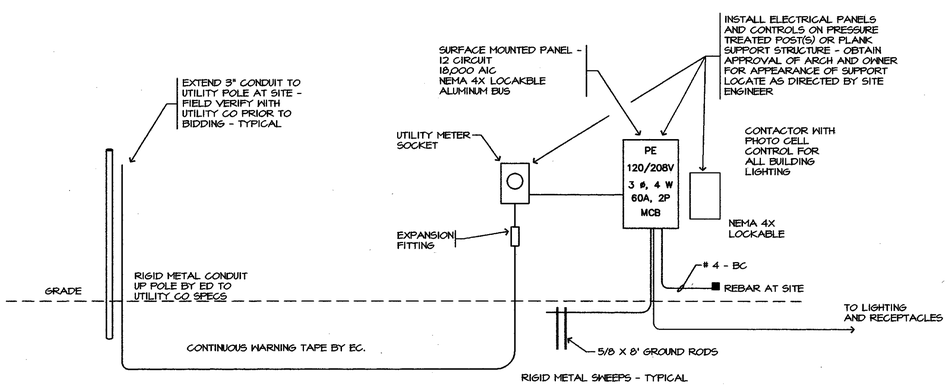

POWER RISER DIAGRAM

ELECTRICAL DESIGN BUILD NOTES

1. ELECTRICAL CONTRACTOR TO COMPLETE DESIGN UNDER DESIGN BUILD CONTRACT
2. DESIGN INTENT SHOWN TO BE EQUALED
3. COORDINATE WITH SITE, CIVIL, ARCHITECTURAL, PLANS AND SPECIFICATIONS
4. COORDINATE WITH MECHANICAL DESIGN / BUILD CONTRACTORS
5. FIRE ALARM VENDOR TO COMPLETE F.A. RISER AND FULL SETS OF SHOP DRAWINGS AND SUBMIT SAME TO LOCAL FIRE DEPART. FOR REVIEW AND APPROVAL PRIOR TO ROUGH-IN.
6. SUBMIT ELECTRICAL DESIGN DRAWINGS AND FIRE ALARM SHOP DRAWINGS TO STATE FIRE MARSHAL OFFICE FOR APPROVAL PRIOR TO ROUGH-IN.

Sherman Greiner Halle' Ltd.
ARCHITECTS · LANDSCAPE ARCHITECTS · PLANNERS
2 Capital Plaza, Concord, New Hampshire 03301 4911
(603) 225-0640 (FAX) 225-0621
Email: info@sghltd.com www.sghltd.com

10/16/2000
100% SUBMITTAL

VHB Vanasse Hangen Brustlin, Inc.

STATE OF NEW HAMPSHIRE

PASSENGER RAIL STATION – EXETER, N.H.

MINI-HIGH PLATFORM ELECTRICAL / LIGHTING

REVISION DATE	DRAWING NAME	SHEET SCALE	FEDERAL PROJECT NO.	STATE PROJECT NO.	SHEET NO.	TOTAL SHEETS
	ELECTRICAL	AS SHOWN	CM-X-5153(001)	10025-A	E-1	43 OF 43